ATC (ITALIA) S.R.L

Global Automation Equipment Manufacturer's Long-term Strategic Partnership

INVIKTA
SYSTEMS

www.inkiktasystems.com

The company reserves the rights to alter the specification without any further notification.
Please contact each branch company or directly consult technical departments in time.

AIRTAC PRODUCT CATALOG

2016

Common

AirTAC
PNEUMATIC EQUIPMENT

INVIKTA
SYSTEMS

www.inkiktasystems.com

AIRTAC INTERNATIONAL GROUP

Milestones

1988:
AirTAC Taiwan established

1998:
Established the first production base in China–AirTAC Guangdong

2002:
Established the largest production base of the group-AirTAC Ningbo

2008:
AirTAC Italy established

2010:
AirTAC IPO In Taiwan
(Stock code:1590.TW)

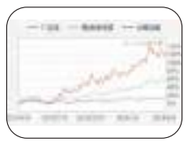

2011:
Expanded China Sales and R&D center

2012:
AirTAC Singapore established

2013:
AIrTAC Japan, Malaysia, and Tainan established

AirTAC's annual sales turnover was USD 87 million in 2009, and the figure increased to USD 242 million by the year of 2013, reached a CARG of 26.38%.

Introduction

Four major manufacture bases, including AirTAC Taiwan, AirTAC Guangdong, AirTAC Ningbo, and AirTAC Tainan. The production building area covers 433,200 square meters in total.

76 subsidiary in worldwide, with 3933 employees.

Our high–efficiency research and development team has 276 engineers, 167 cutting edge equipment for testing and developing, and building area covers 10,530 square meters.

Our extensive sales network has all kind of sales, technicians, and customer services in worldwide, with1,568 personnel. We can provide the service to you at anytime and anywhere.

AirTAC has thousands of modern equipment for production and testing, and dozens of automated assembly line.

www.airtac.com

Powerful systems of production research and development and production guarantee

AirTAC International Group is the worldwide famous professional manufacturer of various pneumatic equipments in large scale and commits itself to providing customers with various pneumatic equipments such as pneumatic control components, pneumatic actuators, air preparation and pneumatic auxiliary components, services and solution plans that meet customers' demand and create long-term value and potential Growth for customers.

The group company invests huge capitals to bring in first-class production equipment and manufacturing process from Germany, Japan and Taiwan to guarantee the steady quality and prominent performance of the products. The Group possesses thousands of various modern equipment on production and examination and ten automatic assembly lines. The Group also mastered a complete set of perfect core technology for the research and development and manufacture of pneumatic products.

The strategic goal of AirTAC for future development is to extend its production and service and insist on the road of people-oriented, reform and innovation and collectivization. Bearing the core values of “people-oriented, sharing, development and duty” of the group, AirTAC consistently carries out the operation philosophy which is respecting the customers”and insists on the operation principle that is“centering on technical innovation and meeting the market demand”to constantly perfect the group culture of building mutual benefit, duty bearing, impartial reward and punishment and growth through learning”and commit itself to continuous development of global industrial automation for a long time through struggle and efforts and constantly strivings for improvement.

Injection molding machinery

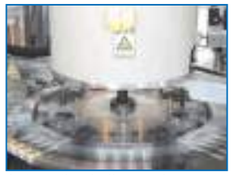

Automatic winding equipment

R & Dcenter

At present, the products of AirTAC have been widely applied in machinery equipment, such as food, environment protection, printing, carpentry, textile, printing and dyeing, railway, packing, construction machinery, welding, plastics, rubber, papermaking, pharmacy, medical treatment, chemical industry, mine, tobacco, glass and ceramics, instrument and valve and automatic industry fields such as electron and automobile. Our customers involve many famous enterprises at home and abroad.

Machinery and manufacturing industry

Packing, pharmacy, medical treatment and chemical industry

Plastics and rubber industry

Subway transportation

Food environment protection industry

Light, textile and printing and dyeing industry

Printing industry

Electron industry

Perfect system of marketing network service

Pre-sales service: provide customers with pre-sales technical support service (such as product selection, optimized selection of system and develop customized products according to customers' requests) to enable customers to rapidly establish confidence on AirTAC;

In-sales service: the branch company in different regions is able to provide spot goods supply of standard products, site installation and debugging guidance for customers, which allows the customers to experience convenience and consideration on AirTAC's services;

After-sales service: carry out trainings in terms of installation, application and maintenance of products mainly against customers and end-users to allow them to master the application of the products in time and provide nationwide warranty service. Improve the identity degree of AirTAC as well as its customers through end-users' sense and approval of the services provided by AirTAC to increase the value of the products.

UK	Denmark	Kuwait	Japan	Argentina
Iran	South Africa	Austria	Brazil	Malaysia
France	Netherlands	Saudi Arabia	Jordan	Srilanka
Greece	Italy	USA	Australia	Colombia
Finland	Syria	Peru	Thailand	Singapore
Sweden	Israel	India	Canada	Indonesia
Germany	Turkey	Korea	Mexico	

Control components

Solenoid valve(3/2 way、5/2 way、5/3 way)

3V1~3V3 Series..... 14
New 3V2M Series..... 18
3V100~300 Series..... 22
4V100~400 Series..... 28
4M(NAMUR) Series..... 36
Manifold..... 38
ESV Series(ISO standard)..... 40

Air valve(3/2 way、5/2 way、5/3 way)

3A100~300 Series..... 52
4A100~400 Series..... 55
Manifold..... 63
EAV Series(ISO standard)..... 65

Manual control valve, mechanical control valve and other valves (3/2 way、4/2(3) way、5/2(3) way)

4H Series hand lever valve.....74
3L、4L Series Push-Pull valve....76
HSV Series hand slide valve..... 78
4HV、4HVL Series hand lever valve.... 79
S3 Series control valve..... 81
M3 Series control valve.....83
M5 Series control valve..... 85
CM3 Series control valve..... 87
ZM3 Series control valve..... 91
3F、3FM Series foot pedal valve..... 93
ASC Series flow control valve.....95
NRV Series non-return valve..... 96

Fluid control valve (2/2 way)

2S Series solenoid valve.....98
2KS Series solenoid valve.....102
2W Series solenoid valve..... 106
2KW Series solenoid valve.....110
2L Series solenoid valve..... 114
2KL Series solenoid valve.....118
2V Series solenoid valve..... 124
2P Series solenoid valve..... 126
2J Series angle seat valve.....127

Preparation unit

G series (F.R.L. combination, FR.L. combination, filter& regulator, filter,regulator, lubricator and others)

GC Series(F.R.L combination)....134
GFC Series(FR.L combination)..136
GFR Series(Filter & regulator)...138
GF Series filter.....140
GR Series regulator.....142
GL Series lubricator.....144
G series(metal bowl).....147
GV Series soft start–up valve.....148
GZ Series safe on-off valve.....149
GA Series air distribution block..150

Other series(regulator, pressure gauge, pressure switch)

SR Series regulator.....152
SDR Series regulator..... 153
ADW Series dripleg drain..... 155
GS、GF、GU Pressure gauge....156
New DPS Series Pressure Switch..... 157
New DPC Series Pressure Switch..... 160

Actuator

Standard cylinder (ISO standard)

SE Series.....165
SI Series.....171
SGC Series..... 179

Actuator

Roundline cylinder

MI Series.....185
PB, PBR Series..... 191

Compact cylinder

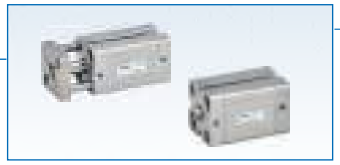

ACE Series..... 199

Ultra-Compact cylinder

ACQ, TACQ Series..... 207

Multi-mounting cylinder, twin rod and tri-rod cylinder

MD\MK Series.....221
MU Series.....229
MPG Series.....233
MPE Series.....237 New
TR Series..... 241
TCL\TCM Series.....245

Slide table cylinder

STW Series..... 251
HLH Series..... 259
HLQ Series.....265
HLS Series..... 283

Magnetic Coupled Rodless cylinder

RMS Series..... 301
RMT Series(ball bearing)..... 305

Actuator

Rotary table cylinder

HRQ Series..... 311

Air gripper

HFZ Series..... 319
HFP Series..... 319
HFY Series..... 319
HFR Series..... 319
New HFC Series..... 319

Twist clamp cylinder, Clamp cylinder

ACK Series..... 341
QCK Series..... 345
New JCK Series..... 349

Boosting Unclamping cylinder, Stopper cylinder, accessories

TW Series..... 367
Cylinder joint accessory..... 377
Sensor switch..... 381

Accessories

Shock absorber

ACA、ACJ Series..... 404

Pilot no-return valve

New Pilot no-return valve..... 410

When designing, producing and using pneumatic system devices, one must be familiar with the requests and attentions of pneumatic components and pneumatic system. Use and operate system devices under the situation that necessary examinations have been conducted and the machinery framework, pneumatic control loop and the electrical control system of pneumatic system are ensured to be in safe condition.

For using our AirTAC products safely, the selection, operation and proper maintenance and management of the products are very important!

To guarantee to use safely, please make sure to operate according to this instruction completely!

Requests of Pneumatic System on Design-Selector and User

Attention

- Confirmation of product models and specifications prior to use The designer of pneumatic system and selector of pneumatic components shall consider the security and faults that may occur according to the requests on performance of pneumatic system and decide the specification of pneumatic components according to the latest product catalog and data. If it is necessary, they shall make relevant analysis and experiment. When the system is used in some newly developed industries or special industries, they should cooperate with the manufacturer of pneumatic components to carry out the selection.

Danger

- Special attention to the following conditions
  - Once the compressed air is wrongly used, it is dangerous. Thus the assembly, operation and maintenance of the pneumatic equipment shall be done by welltrained person with certain practical experience.
  - Before making sure that it is safe, prohibit to use pneumatic equipment or to disassemble pneumatic components from the equipment.

Warning

- After confirming that the above safe treatment has been conducted, cut off the power and air source, release the remaining air, and conduct maintenance or disassembly on the equipment.
  - Before starting the equipment, make sure that the piston rod will not stick out rapidly.

Requests of Pneumatic System at Application Environment

Attention

- It is not allowed to use the system in the environment that includes corrosive gas, chemicals (such as organic solvent), seawater, water and steam or the place with the above substances.
- It is not allowed to use it in the place with explosive gas. (If necessary, consider adopting explosion-proof measure).
- It is not allowed to use it in the situation with oscillation and impact, or the component capacity to resist to oscillation and impact shall accord with the specification in this catalog.
- It is not allowed to use it in the place that has heat source around or is influenced by radiant heat. Otherwise, it is better to adopt measures to interdict the radiant heat.

Warning

- Add shields in the place with direct sunshine.
- In case the system is used in the place with large humidity and much dust or the place with water drop, oil drop, cutting oil and dispersing cooling fluid, proper protective measures shall be taken.
- The cylinder with magnet can not be used in the environment with strong magnetic field.

Danger

- In special temperature environment:
  High temperature environment: please use seals resisting high temperature
  Low temperature environment: moisture in loop may freeze and affect the action, at this moment, the moisture shall be eliminated to avoid freeze.

Attentions on the Design and Selection of Pneumatic System

Attention

- Use the product under the stipulated application condition and scope
  This catalogue stipulates the operation scope and condition. Please operate according to it. Any operation beyond the scope and condition may cause fault of and damage to the components, even result in danger and harm. Therefore, please contact our company in case that the products are used under the condition be yond the specified application condition and range, or any other fluid except the compressed air is used.

- Please design and install protective devices in the device part which may cause personal injury. The drive part of the cylinder may cause personal injury, please design and install protective devices to make sure people cannot directly contact the drive part when it works.

- Please effectively fasten the drive part of the cylinder to avoid the looseness of connective part. Especially under the circumstance with high action frequency or larger oscillation, effective fastness must be strengthened.

- Design necessary buffer loop or buffer devices
  When drive objects have higher speed or heavier weight, it is difficult to absorb impact solely by cylinder cushion. Therefore, buffer loop or external buffer must be designed or used to absorb the impact. Moreover, the rigidity of the machinery devices must be considered.

Danger

- When designing the system, the devices and personal safety shall be considered under the situation of power failure or air failure. For the clamping framework, if the pressure of system loop declines due to power failure and air failure, it will result in falling off of the components and further the harm on machinery devices and people, therefore, it is necessary to consider designing antifalling loop or devices.

- When designing the system, please consider the possibility that power source may produce faults Please adopt relevant measures to make sure that the drive devices such as air pressure and electrical power will not result in personal injury or damages of devices when the power source has faults.

- Please make a loop that can prevent it from flying out when designing system.
  When pneumatic system is debugged or overhauled after releasing the remaining pressure, the system starts to pressurize the piston at one side, and the driven object may be pushed in high speed. In this situation, please design loop or device which can prevent cylinder from rapidly flying out to avoid personal injury or machinery damage.

Warning

- When designing the system, please consider the action status in emergency stop situation.
  The design shall make sure that the action of cylinder will not cause personal injury or component and device damage under the situation that the system is in abnormal status such as emergency stop or power failure and that the safety devices and the machinery stop.

- When designing the system, please consider the actions during restarting after emergency stop and abnormal stop.
  The design shall make sure that the system will not cause personal injury or component damage when it restarts. In addition, for safely operation, please design return device.

- Intermediate stop
  When the cylinder stop in the middle position controlled by three-position closed center type valve, due to the compressibility of the air, it is hard to control the precise position of the cylinder. In addition, it can not avoid the air leakage of valve or cylinder absolutely, so the stop position is difficult to keep on for a long time. Therefore, please design necessary devices when a long-term stay in stop position is required.

- Synchronization of several cylinders in the system
  Due to the compressibility of the air, it is difficult to control several cylinders precisely by the same direction control valve. In this situation, special devices or loop shall be taken into consideration when designing.

- Please use the purified dry air in the air loop.
  Do not use the air with synthetic oil (including chemicals and organic solvent), salinity and corrosive gas to avoid component damage or poor action.

Attention for the Use of Lubricant for Pneumatic System

Attention

- Generally, the pneumatic components have been lubricated by grease when producing. Therefore, they can be used without additional lubrication for a long time.

- In case of using additional lubrication, please use turbine oil (without additive) ISO-VG32. Engine oil, spindle oil or other oils are not allowed to avoid soaking and expanding of the seals like NBR.

- If lubrication is stopped in the midway, the original lubricated grease in side may have been flushed off, then the lack of lubrication will cause poor action of elements and accelerate the abrasion of relevant parts. Therefore, please make sure to supply oil con stantly and an oil misting device with proper flow shall be equipped.

Warning

- When lubricating the compressed air, the oil mist quantity can not surpass 25mg/m .

- When the system runs normally, the oil mist quantity is set as 0.2-1 drop or 0.5-5 drops/1000L.

- The simple method for testing the oil mist quantity is: put one piece of white paper at the port of cylinder control valve which is the most far from lubricator, after a while, the white paper takes on lemon yellow. If there are oil drops falling down from the white paper, it indicates the excessive lubrication.

Requests of Pneumatic System to Compressed Air

Attention

- The compressed air ejected by air compressor can not be directly used in the air loop, since it has certain moisture, oil content and dust, which should be gaseous in the high temperature of about 140-170℃ through the compressor.

- Make sure to use compressed air that has been purified
  - ◆The filtration precision of common machinery and common pneumatic loop is ＜50μm;
  - ◆The filtration precision of logic elements, jet elements and air motors is ＜10μm;
  - ◆The filtration precision of food, medicine, electron, tobacco and liquor and pneumatic bearing is ＜5μm;

Danger

- The oil mist in compressed air may gather in the container of gas tank, pipeline and pneumatic system and forms combustibles which may cause harm to pneumatic system.

- The degenerative lubricant will make rubber, plastic and seals materials go bad and block the port, which may cause action failure of valve.

- Moisture and dust will cause erosion and rustiness of metal parts, abrade and trap the action parts, block the ports and lead to transmission abnormity of air pressure signal. In cold area, the freezing of moisture will cause freeze and frost-crack of pipeline and the failure of elements and components.

- It is not allowed to use the compressed air with harmful gas (such as acid and alkali).Acid and alkali will cause damage to internal parts of pneumatic components.

Warning

- The compressed air without the content of oxygenated oil of air compressor, tar and carbon shall be used.

- If the oxygenated oil, tar and carbon get into air pressure elements and become additive to them, the resistance of slipping parts will be increased and poor action will be caused. The mixture of oxy genated oil, tar and carbon with lubricant will abrade the slipping parts of air pressure elements.

- It is not suitable to use dry air in air pressure elements. Please use the elements corresponding to ultra-dry air. The ultra-dry compressed air will shorten the service life of air pressure elements.

Tubing and Installation of Pneumatic System

Attention

- Please obey the following stipulations on the entwining method of sealant tape when connecting fitting and tube. Please start to entwine sealant tape from 1st-2nd screw thread at the front part of tube thread and on both of positive direction and inverse direction of the thread. If the sealant tape entwines out of the front part of the tubing thread, it will be torn into fragments which will cause faults and wrong action if they get in the system.

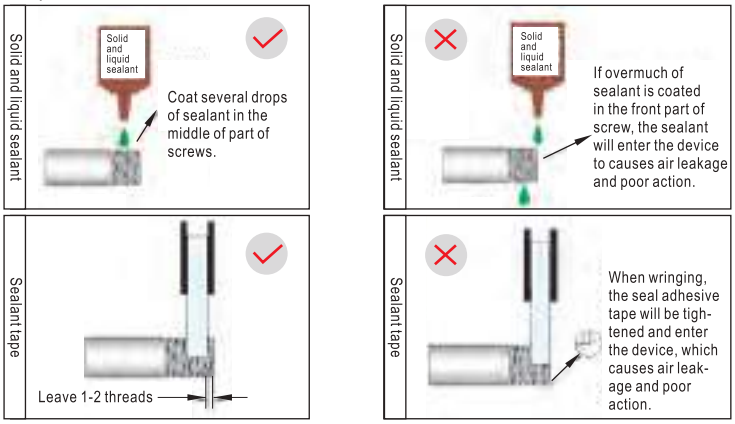

- When connecting the tubing, please fasten with proper torque to prevent air leakage and thread damage.

Table one：Reference value of Fasten torque　　Unit：N.m

Connective thread	M3	M5	1/8"	1/4"	3/8"	1/2"	3/4"	1"
Fasten torque	0.3~0.6	1.0~1.5	7.0~9.0	12~14	22~24	28~30	28~30	36~40

Warning

Pay attention to the following matters when using nylon tube or polyurethane tube materials:

- Please use flame retardant tube or metal tubing in the environment with high temperature spark;

  The proof pressure is different according to the bore size of tube and the working temperature

Table two：Reference data of maximum proof pressure　　(Unit：kgf/cm^2)

OD/ID(mm)		4/2.5	5/3	6/4	8/6	10/7.5	12/9	14/11	16/12	22/17	28/22
Maximum pressure (−40℃~20℃)	Nylon tube	28	31	25	19	24	18	15	18	15	15
	PU tube	10	11	9	9	9	9	-	-	-	-
Minimum bending radius (mm)	Nylon tube	25	2	30	50	60	75	90	95	125	160
	PU tube	6	7	9	16	17	25	-	-	-	-
Using in different working temperatures, the maximum proof pressure shall multiply the following coefficient.		+30℃		+40℃		+50℃		+60℃		+70℃	
		0.83		0.72		0.64		0.57		0.47	

- The pipeline shall be cleaned with compressed air prior to connecting the tubing and fittings to the pneumatic components.

Convert American system and British system unit to international (SI) unit

Length unit

American and british system		Conversion rates	International
1 in	=	25.4	mm
1 ft	=	0.3048	m
1 mile	=	1609.3	m
1 micron	=	10^{-6}	m

Quality unit

American and british system		Conversion rates	International
1 lb	=	453.6	g
1 cwt	=	50.8	kg
1 ton(imp)	=	1016	kg
1 ton(us)	=	907.2	kg
1 tonne	=	1000	kg

Moment unit

American and british system		Conversion rates	International
1 inlb	=	0.113	Nm
1 ft lb	=	1.356	Nm
1 kgm	=	9.807	Nm
1 ft poundal	=	0.0421	Nm

Temperature unit

American and british system		International
(°F-32) × 5/9	=	℃
K-273.15	=	℃

Area unit

American and british system		Conversion rates	International
1 in^2	=	6.45	cm^2
1 ft^2	=	0.093	m^2

Pressure unit

American and british system		Conversion rates	International
1 psi	=	6.89	kPa
1 kgf/cm^2	=	98.07	kPa
1 bar	=	100	kPa
1 bar	=	14.5	psi
1 atmosphere	=	98.1	kPa
1" (STANDARD)	=	101.33	kPa
1 cm water	=	97.89	Pa
1 in water	=	248.64	Pa
1 mm mercury	=	133.3	Pa
1 in mercury	=	3.39	kPa
1 Torr	=	133.3	Pa
1 ft water	=	0.0298	bar
1 bar	=	33.33	ft water

Unit of work and energy

American and british system		Conversion rates	International
1 lbft	=	1.356	J
1 Nm	=	1	J
1 kgm	=	9.807	J
1 kW/hr	=	3.6	MJ

Volume unit

American and british system		Conversion rates	International
1 litre	=	0.001	m^3
1 cu.ft.	=	0.0283	m^3
1 cu.in.	=	16.39	cm^3
1 gal(imp)	=	4.546	L
1 gal(us)	=	3.79	L
1 fluid oz.(imp)	=	28.41	mL
1 fluid oz.(us)	=	29.57	mL

Force unit

American and british system		Conversion rates	International
1 lbf	=	4.45	N
1 kgf	=	9.81	N
1 kp(kilopond)	=	9.81	N
1 poundal	=	138.3	mN
1 ton force	=	9.964	kM

Power unit

American and british system		Conversion rates	International
1 lbft/sec	=	1.356	W
1 kgm/sec	=	9.807	W
1 Nm/sec	=	1	W
1 Joule/sec	=	1	W
1 H.P.(imp)	=	745.7	W

Flow unit

Cv value	=	It's the constant value of flow, when the water flow(US gal/min)is under 60°F, the D−value of pressure between intake and outlet is 1psi (Cv × 1000≈L/min)
kv value	=	It's the constant value of flow, when the water flow(L/min)is under 20℃, the D−value of pressure between intake and outlet is $1kgf/cm^2$
KV value	=	It's the constant value of flow, when the water flow(m^3/min)is under 20℃, the D−value of pressure between intake and outlet is $1kgf/cm^2$
S.T.P	=	Standard temperature and pressure (0℃ and 101.3kPa absolute pressure)
N.T.P	=	Normal temperature and pressure (20℃ and 101.3kPa absolute pressure)
M.S.C	=	Standard of metric syctem (15℃ and 101.3kPa absolute pressure)
ANR	=	Temperature：20℃ and relative humidity：65%

Unit compilation

Unit full name	Abbreviation
Pascal	Pa
Newton	N
metre	m
litre	L
Watt	W
Newton metre	Nm
Jonle	J
Megajoule	MJ
Kelvin	K

Equivalence conversion

1 psi	=6.895	kPa	=0.07	kg/cm^2	=0.06895	bar	=0.0703	atm
1 standard atmosphere	=14.7	psi	=101.3	kPa	=1.01325	bar		
1 kg/cm^2	=98.07	kPa	=14.22	psi	=28.96	ins mercury		
1 ft lb	=0.13826	kgm	=1.356	Nm				
1 L	=1000	cm^3	=1.7598	pint	$=10^6$	mm^3		
1 tonne	=1000	kg	=0.984	ton	=2205	lb		
1 m^3	$=10^6$	cm^3						
1 cu ft/min.	=28.3	l/min	=0.0283	m^3/min				
1 Pa	=28.3	l/min	=0.0283	m^3/min				

Summarization of control components

To make system realize the best performance, the control components must be precise and accurate. Component with good performance is the precondition to realize precise and exact action. AirTAC has many types of control components for your choice:

1. Direction control valve—Solenoid valve.
2. Direction control valve—Air valve.
3. Direction control valve—manual control, mechanical control and other valves.
4. Fluid control valve—two way solenoid valve, angle seat valve.

Solenoid valve

3V1 Series..... 14
3V2 Series..... 16
3V2M Series..... 18
3V3 Series..... 20
3V100~300 Series..... 22
4V100~400 Series..... 28
4M100~300 Series..... 36
Manifold..... 38
ESV Series(ISO Standard)..... 40

Fluid control valve

2S Series solenoid valve.....98
2KS Series solenoid valve.....102
2W Series solenoid valve.....106
2KW Series solenoid valve.....110
2L Series solenoid valve.....114
2KL Series solenoid valve.....118
2V Series solenoid valve.....124
2P Series solenoid valve.....126
2J Series angle seat valve.....127

Air valve

3A100~300 Series..... 52
4A100~400 Series..... 55
Manifold..... 63
EAV Series(ISO Standard)..... 65

Manual control, mechanical control and other valves

4H Series hand lever valve..... 74
3L、4L Series Push–Pull valve..... 76
HSV Series hand slide valve..... 78
4HV、4HVL Series hand lever valve
..... 79
S3 Series control valve..... 81
M3 Series control valve..... 83
M5 Series control valve..... 85
CM3 Series control valve..... 87
ZM3 Series control valve..... 91
3F、3FM、4F Series foot pedal valve
..... 93
ASC Series flow control valve..... 95
NRV Series non–return valve..... 96

Valves

The selection of valves

1. Form selection
   According to application requests and conditions, choose the form of valves: direct acting or pilot.
2. Selection of control mode
   According to the control requests upon application, choose the control mode: air, electrical, manual or mechanical control.
3. Selection of function of valves
   The function of valves is selected upon the working requirements: two-position two-way, two-position three-way, two-position five-way and three-position five-way; or middle-sealed, middle leakage and midway pressurizing type, etc.
4. Selection of model and specification
   Select the model and specification of valves upon the flow requirements of application.
5. Selection of installation way
   The installation way is selected upon the installation requirement of valves: pipe-joint type or containerized type.
6. Selection of electric parameters
   Select the electric model of valves upon actual application requirement: voltage, power and grommet type.

Attentions on Design and Selection

Attention

1. Correctly understand and apply midway stop function of reversing valve
   In the place with three-position middle-sealed or middle-pressure reversing valves to carry out the midway stop of piston in cylinder (double axes or adjustable double axes), as the air has compressibility, it is difficult to have correct and precise position stop. In addition, it is not available to make sure that leakage will not occur in the valves and cylinders, thus it cannot stay in the position of midway stop for a long time. Other ways shall be taken to maintain a long-term stop.
2. Pay attention to the influences of back pressure caused by the consolidation of valves on the system;
   In the place with consolidation of valves, pay attention to the wrong action of actuators caused by back pressure; especially pay attention to the place using three-position midway leakage reversing valves and the place driving single acting cylinder. Individual intake and exhaust must be carried out in the place that-ay have wrong action.
3. Fully consider the release of remaining pressure between reversing valves and cylinders;
   Considering the system examination need, the function of releasing remaining pressure shall be set up. Especially in the place using three-position midway leakage reversing valves, the remaining pressure between reversing valves and cylinders must be eliminated.
4. The temporary power supply and air supply of dual controlled valves.
   Routine dual electric (air) control valves have memory function (except for three-position valves), in the place with temporary power supply, the duration of power supply shall be above 0.1s to make sure that the valve has changed its direction.
5. Application of lowest pressure for air supply
   The requirement of lowest application pressure shall be considered for the internal pilot-oriented valves, while direct drive valves or external pilot-oriented valves are not limited by lowest application pressure.
6. Use in vacuum condition
   If the valves are used in the place with vacuum switching, measures to prevent the inhalation of dust from suction cup shall be adopted. Moreover, direct drive or external pilot-oriented reversing valves shall be selected in vacuum condition.

Notice for Application and Maintenance

Warning

To maintain normal and good working state of pneumatic system,the following maintenance work is necessary in actual use:

1. Examine application pressure: regularly examine whether the pressure is normal in work;
2. Examine the filter situation of the compressed air: regularly examine whether filters and oil misting device work normally and whether their pollution situation is normal;
3. Examine whether system pipeline leaks;
4. Examine whether solenoid valves act slowly and whether the exhaust-situation is normal;
5. Examine whether the adjustment of oil quantity of oil misting device is normal;
6. Please read relative content in this manual about the requirements of solenoid valves to air quality and application environment, the pipeline connection of solenoid valves and the lubrication of solenoid valves;
7. The switching action of valves shall be guaranteed regularly under low-frequency application, at least once switching shall be conducted for each month.

The Application of Fluid Control Valves

Attention

Pipeline:

1. Completely clean pipeline to eliminate miscellaneous chip, oil pollution and dust.
2. Miscellaneous chip of whorl and sealed materials shall be prevented from entering the pipeline when installing pipeline connection (when adopting whorl sealant tape, at least one section of thread shall be preserved).
3. Pay attention to connective pipe direction (IN, OUT), IN (entrance) or other marks in each interface.
4. Never make the coils bear outside force, and only use spanner to clinch the installation position in pipeline when revolving into pipeline.
5. The pipeline shall not connect the ground; otherwise galvanic corrosion will be caused.
6. Install overflow valves in circuit to prevent the fluid accumulation in pipeline.

Wiring:

1. The minimum area of section of the wire is 0.5mm^2.
2. Electrical circuit shall be adopted to prevent the vibration in connective points.
3. Associate overvoltage suppressor and overvoltage suppressor in coils when electrical components are easily damaged by overvoltage.
4. The allowable voltage scope is within -10% ~ +10% of the rated voltage. If a better response of DC power is required, the voltage scope shall be within ±5% of the rated voltage and voltage drop can be measured at the connective points between the leading wires and coils.
5. When it is AC power, the backswing voltage is 20% or above of the rated voltage. When it is DC power, it is 2% or above of the rated voltage.

Installation:

1. When installing, the coils shall be made upward. The inlet port and outlet port should be kept horizontal.
2. Never heat coils and insulation components, otherwise they will burn the coils. Anti-freezing heater can only be used in pipeline and valves body.
3. Never install in the place with violent vibration.
   If it cannot be avoided, the arm length shall be regulated to the minimum to avoid resonance.

Storage:

1. If the water fluid will be kept for a long time after using, the moisture shall be completely eliminated to avoid corrosion in rubber part.

Long-term open or stop of the valves:

1. The frequency of switching valves depends on the type and performance of the fluid. When using purified water as standard, the valves shall be switched at least once every ten days. If the period is longer than ten days, system test devices shall be installed. Valves shall not be used in the following working environment such as emergent circuit breaker.

Temperature of the fluid:

1. Refer to temperature scope of each type and the influences of the factors such as sealed materials, coil insulation, power and air supply. For application in special circumstance, please contact the supplier.

Applied fluid:

1. Fluid grade
   When selecting the valves type, make sure that the fluid is adapted to the materials of valves. Generally speaking, the maximum viscosity of fluid is 50cst. Please contact the supplier for specific data.
   <Reference> Standard materials
   Valve body: brass or BC6, seal: NBR, coil: insulated B step
   The above valves are used in water, air and oil medium. If they are used in other materials, please refer to “option list” and “adaptable fluid sheet”. There will be a small difference in types.
2. Fluid quality
   The impurity in fluid will accelerate the abrasion of valve cup and iron core. Granule that adheres to the iron core and slipping plane will decrease the function of valves and cause invalidity of seal function. Filter shall be installed in the front of the entrance of valves to avoid the above problems. Net limit of 80-100 is normally recommended.
3. Lubrication
   Lubrication is not necessary for this valve, but lubricated air will extend its life.
4. If the valves are used in inflammable oil and air, the leakage at the entrance and exit shall be prevented.
5. If impurity or oil is not allowed in the fluid, the valves without theneed of lubrication shall be applied.
6. In case the application condition approaches the limit of valves, the parameter of the option and fluid may be different from that of routine application. Make proper choice according to actual use situation.

Installation of Direction Control Valve

Although direction valves can be installed in any direction, due to the vibration of devices or flowing of liquids such as condensate and oil to the coil part of solenoid valve, poor action of direction valve will be caused.

Please take care during installation.

1. The influence of vibration on sliding column in solenoid valve shall be avoided. During installation, the vibration direction may form a right angle to the action direction (axial direction) of sliding column in solenoid valve to avoid the influence of vibration to sliding column in solenoid valve.

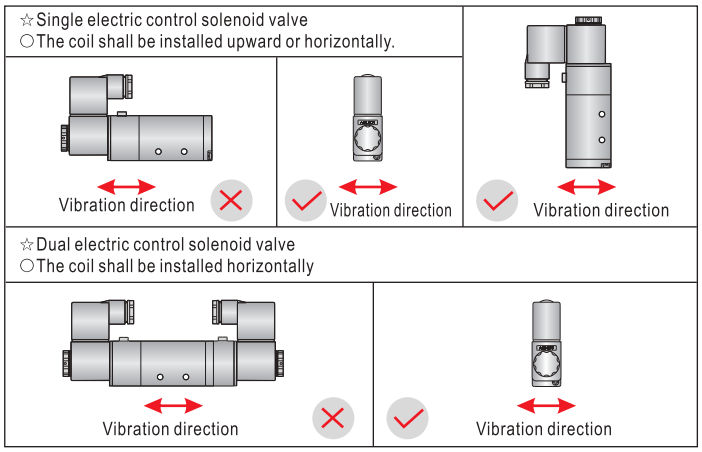

2. To prevent condensate and oil from flowing into coil in solenoid valve, you'd better install the coil upward or horizontally.

Installation legend:

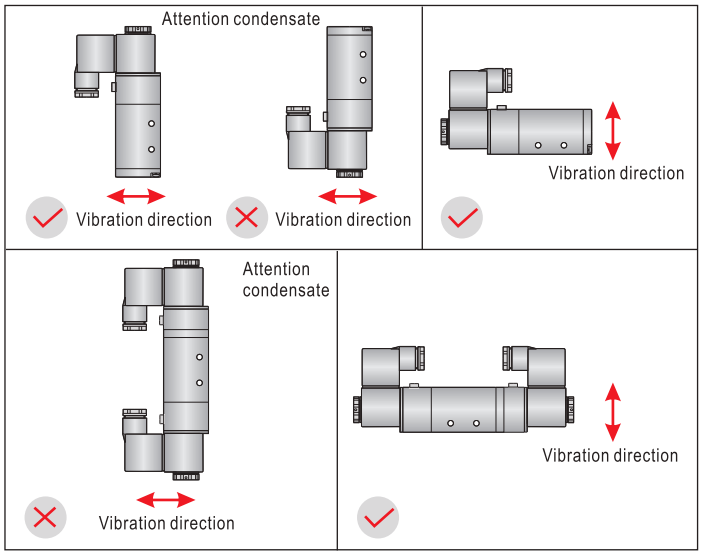

3. Blow away the miscellanies such as dust, oil pollution and chips in the pipeline to avoid influencing the action and damage of valves.
4. The intake of internal pilot-oriented solenoid valve cannot throttle to prevent wrong action caused by too large pressure drop when switching the direction.

Danger

5. Install reversing valves closely to cylinder as possible as you can to reduce air consumption and achieve a quick response.
6. Please make sure completely insert the tubing and use it after confirming that the tubing cannot be pulled out.
7. Although our product coils are set as 100% ED, if the product is energized for a long time, overheating will be caused, insulation will be deteriorated and energy will be lost. Solenoid valve with memory function shall be considered to shorten power supply time and extend the service life of coils and save energy consumption under the situation of long-timeconstant power supply.
8. Manual button is not allowed to be used when solenoid valve is energized.
9. The application voltage of solenoid valve shall be kept within the specified voltage range to avoid causing poor action of valves or burning coils.
10. As the solenoid valve is installed in the control tank, pay attention to the ventilation and heat dispersing when it is energized for a long time to guarantee that the temperature inside of the tank is within the temperature range for the safe application of solenoid valve;
11. Interlock protection control circuit shall be designed to pre vent the two coils of the dual electrical control solenoid valve from being energized at the same time.
12. The blowhole in internal control piston of main valve and exhaust outlet in pilot-oriented valve cannot be jammed or un smooth.
13. As solenoid valve in DC specification has polar indicator lights, pay attention to the positive and negative poles when wiring. Connect “1” to the positive pole, and “2” to the negative pole. If connection is inversed, the indicator lights will not shine but valves can still work.

In addition: refer to page 8 in this manual for the content on the lubrication, tubing and application environment of solenoid valve.

Product series

Solenoid valve: 3V1Series 14

Solenoid valve: 3V2 Series 16

Solenoid valve: 3V2M Series 18

Solenoid valve: 3V3 Series 20

Solenoid valve: 3V100 Series 22

Solenoid valve: 3V200 Series 24

Solenoid valve: 3V300 Series 26

Solenoid valve: 4V100 Series 28

Solenoid valve: 4V200 Series 30

Solenoid valve: 4V300 Series 32

Solenoid valve: 4V400 Series 34

Solenoid valve: 4M(NAMUR) Series 36

Manifold 38

Solenoid valve(ISO standard): ESV Series 40

Installation and Application

1. Before installing, be sure the valve hasn't been damaged via transportation.
2. It's suggested to use the medium lubricated by 40 μ m filter element. Be aware of the flow direction and port size.
3. Please notice whether the installation condition accords with technical requirements (such as "voltage", "actuation frequency", "working pressure" and "scope of application temperature"), then the equipment can be installed and used.
4. Notice the flow direction of air during installation, P is the air intake, A (B) is the work port and R (S) is the exhaust outlet.
5. Take measure to avoid vibration and frozen.
6. Before using the fittings and tubes make sure they are clean. When connecting to fittings, be sure the PTFE Thread Seal Tape is used correctly.
7. To keep the dust away, please use the silencer for the exhaust ports. Never forget to install dirt-proof boot in air intake and outlet during dismounting.
8. After installing, please use the manual override to test valve first.

Specification

Model	3V1-M5	3V1-06
Fluid	Air(to be filtered by 40 μ m filter element)	
Acting	Direct acting	
Port size ①	M5	1/8"
Valve type	3 port 2 position	
Lubrication	Not required	
Operating pressure	0~0.8MPa(0~114psi)	
Proof pressure	1.5MPa(215psi)	
Temperature ℃	-20~70	
Orifice size	Φ1.2mm	
Material of body	Aluminum alloy	

① G thread and NPT thread are available.

Symbol

Coil specification

Item	Specitification
Standard voltage	AC220V, AC110V, AC24V, DC24V, DC12V
Scope of voltage	AC: ± 15% DC: ± 10%
Power consumption	AC:3.5VA DC:3.0W
Protection	IP65(DIN40050)
Temperature classification	B Class
Electrical entry	Terminal, Grommet
Activating time	0.05 sec and below
Max. frequency ①	10 cycle/sec

① The maximum actuation frequency is in the no-load state.

Product feature

1. Direct acting type and normally closed mode, flexible in direction change.
2. No need to add oil for lubrication.
3. Several valves can be installed integrately to save installation space.
4. Affiliated manual devices are equipped to facilitate installation and debugging.
5. Several standard voltage grades are optional.

Inner structure

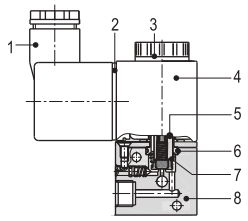

No.	Item	No.	Item
1	Connector	5	Armature
2	Gasket	6	O-ring
3	Coil nut	7	Return spring
4	Coil	8	Body

Flow chart

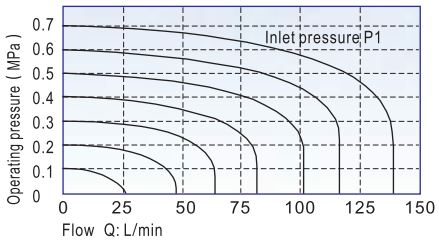

Dimensions

Terminal

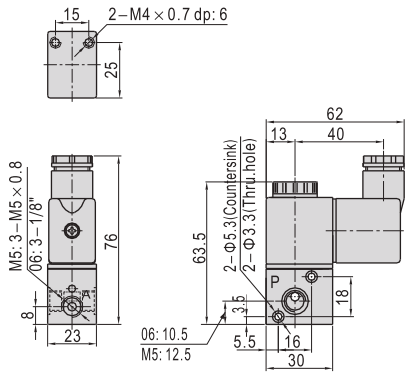

Grommet

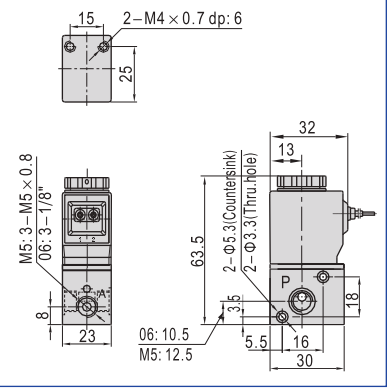

Ordering code

3V 1 06 A □ G

Model
3V: Solenoid valve (3/2 way)

Code
1: 1 Series

Port size
M5: M5
06: 1/8"

Voltage
A: AC220V
B: DC24V
C: AC110V
E: AC24V
F: DC12V

Electrical entry
Blank: Terminal
I: Grommet

Thread type

Port size	Thread type
1/8"	G: G
	T: NPT
M5	Not this code

Series connection

Dimensions(3F)

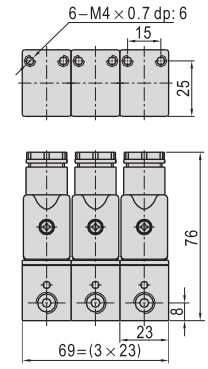

Dimensions(1F)

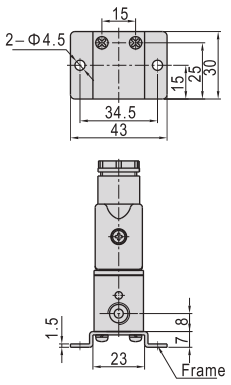

How to joint

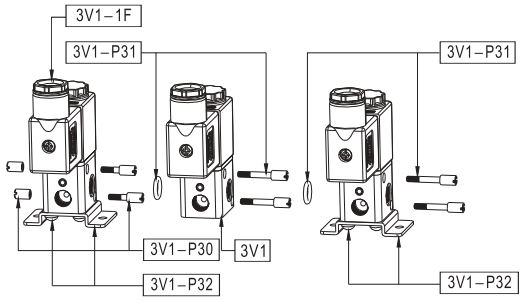

Product structure

Connection Amount\Q.TY	3V1	3V1-P30	3V1-P31	3V1-P32
3V1-□-□-1F	1	0	0	1
3V1-□-□-2F	2	1	1	1
.....	.....	1	.....	.....
3V1-□-□-nF	n	1	n-1	2

Note: n is the number of junction valve, and n≥3

Ordering code for series

3V1 06 A □ 3F G

Model

3V: Solenoid valve(3/2 way)

Port size

M5: M5
06: 1/8"

Voltage

A: AC220V
B: DC24V
C: AC110V
E: AC24V
F: DC12V

Electrical entry

Blank: Terminal
I: Grommet

Thread type

Port size	Thread type
1/8"	G: G
	T: NPT
M5	Not this code

Number of stations

1F: 1 Station
2F: 2 Station
3F: 3 Station
.....
20F: 20 Station

The above codes have included the series accessories, so it is unnecessary to order the accessories specially. But if you like, you could order as follows.

Code of accessories	Accessory name	Part code	Part name	Quantity
3V1-P30	Coupling screw assembly	F-3V1002B	Coupling screw(S)	2
		F-3V1003B	Coupling screw(M)	2
3V1-P31	Coupling screw assembly	GOR20008N75	O-Ring	1
		F-3V1004B	Coupling screw(L)	2
3V1-P32	Bracket assembly	F-3V1001B	Fixed mounting	1
		GSDA04008ZA	Cross round head screw	2

3V2

Specification

Model		3V206	3V208
Fluid		Air(to be filtered by 40 μ m filter element)	
Acting		Direct acting	
Port size ①		1/8"	1/4"
Valve type		3 port 2 position	
Orifice size		3.2mm²(Cv=0.18)	3.4mm²(Cv=0.19)
Lubrication		Not required	
Operating pressure	Common	0~0.8MPa(0~114psi)	
	vacuum	-101.2kPa~0.1MPa(-14.8~14.5psi)	
Proof pressure		1.5MPa(215psi)	
Temperature ℃		-20~70	
Material of body		Aluminum alloy	

① G thread and NPT thread are available.

Symbol

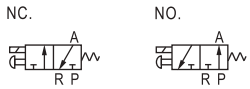

Coil specification

Item	Specitification
Standard voltage	AC220V, AC110V, AC24V, DC24V, DC12V
Scope of voltage	AC: ± 15% DC: ± 10%
Power consumption	AC:7VA DC:7.0W
Protection	IP65(DIN40050)
Temperature classification	B Class
Electrical entry	Terminal, Grommet
Activating time	0.05 sec and below
Max. frequency ①	10 cycle/sec

① The maximum actuation frequency is in the no-load state.

Product feature

1. Direct acting type and normally closed mode, flexible in direction change.
2. Normally closed and normally open types are optional.
3. Structure in coaxial blanking mode: leakage proof and large air flow.
4. No need to add oil for lubrication.
5. Affiliated manual devices are equipped to facilitate installation and debugging.
6. Several standard voltage grades are optional.
7. Can be used under vacuum condition.

Ordering code

3V 2 08 NC A □ G

- **Model**: 3V: Solenoid valve(3/2 way)
- **Code**: 2: 2 Series
- **Port size**: 06: 1/8"; 08: 1/4"
- **Acting type**: NC: Normally closed; NO: Normally opened
- **Voltage**: A: AC220V; B: DC24V; C: AC110V; E: AC24V; F: DC12V
- **Electrical entry**: Blank: Terminal; I: Grommet
- **Thread type**: G: G; T: NPT

Flow chart

Model: 3V208NC

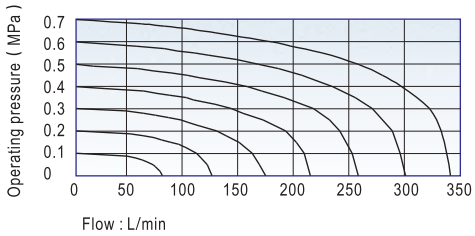

Ordering code of accessories

F–3V2 FA

- **Accessories code**: F: Mounting accessories
- **Accessories type**: FA: FA Bracket
- **Valve type**: 3V2: Solenoid valve(3/2 way)

Inner structure

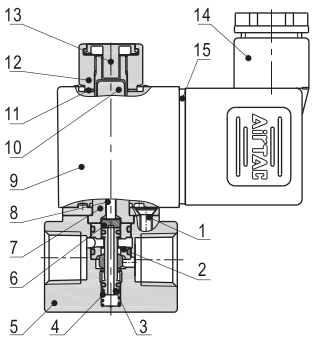

No.	Item	No.	Item
1	Pilot screw	9	Coil
2	Spacer	10	Armature
3	Spool	11	Washer
4	Spring	12	Coil nut
5	Body	13	Manual button
6	Washer	14	Connector
7	Electromagnet set	15	Gasket
8	Man drill		

Dimensions

Terminal

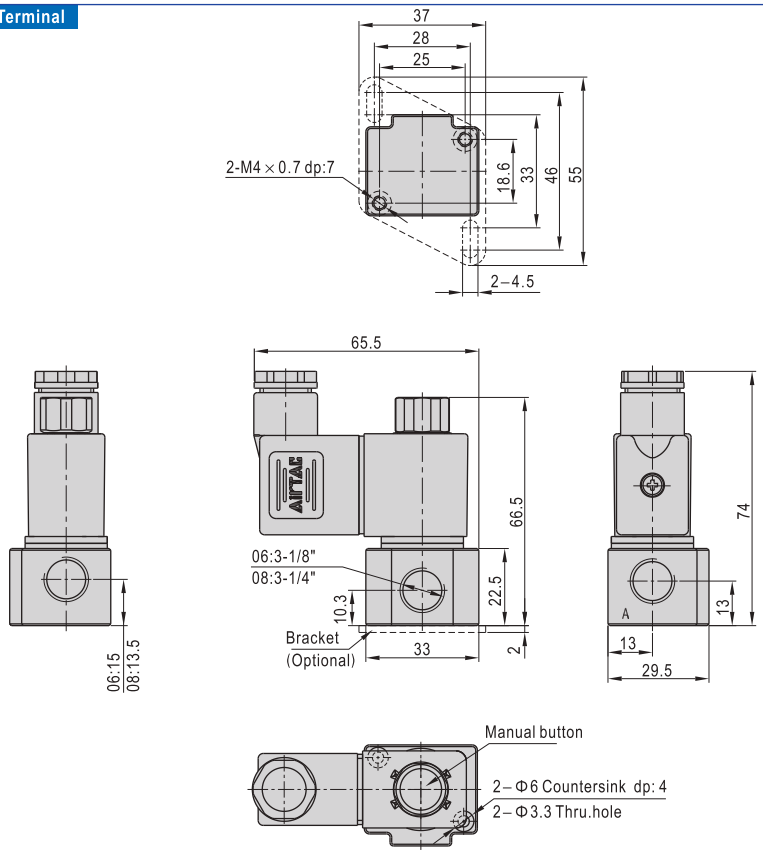

Grommet

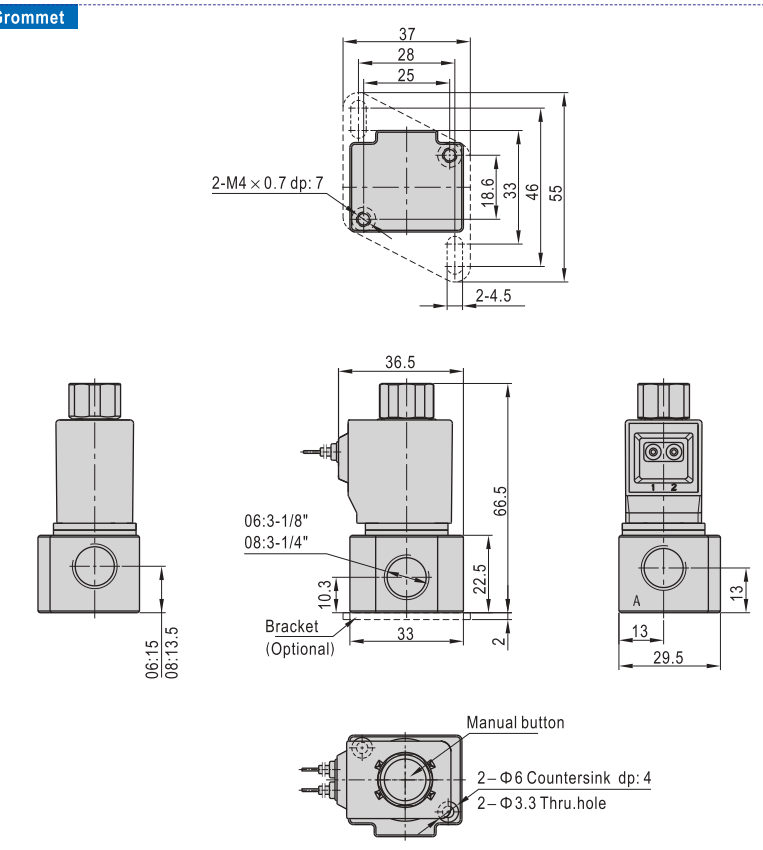

Solenoid valve(3/2 way)

3V2M Series

3V2M

Specification

Model	3V2M
Fluid	Air(to be filtered by 40 μ m filter element)
Acting	Direct acting
Port size ①	1/8"
Valve type	3 port 2 position
Orifice size	1.7mm^2(Cv=0.1)
Exhaust type	Centralized exhaust，Separated exhaust
Operating pressure	0~0.8MPa(0~114psi)
Proof pressure	1.5MPa(215psi)
Temperature ℃	-20~70
Material of body	Aluminum alloy

① G thread and NPT thread are available.

Symbol

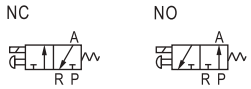

Coil specification

Item	Specitification
Standard voltage	AC220V, AC110V, AC24V, DC24V, DC12V
Scope of voltage	AC: ± 15%　DC: ± 10%
Power consumption	AC:7VA　DC:7.0W
Protection	IP65(DIN40050)
Temperature classification	B Class
Electrical entry	Terminal, Grommet
Activating time	0.05 sec and below
Max. frequency ①	10 cycle/sec

① The maximum actuation frequency is in the no-load state.

Product feature

1. Direct acting type and normally closed mode, flexible in direction change.
2. Normally closed and normally open types are optional.
3. Structure in coaxial blanking mode: leakage proof and large air flow.
4. No need to add oil for lubrication.
5. Affiliated manual devices are equipped to facilitate installation and debugging.
6. Valve needs to be used with the sub-base and allows various connection combinations to save space.
7. It is easy to examine when there are faults owning to the unified air intake and exhaust and unified wiring.
8. Flexible combination and strong expansion capability can make any combination or expansion of the numbers of direction control valves that are connected.
9. Can adjust the installation direction of special sub-base seal for NO or NC functions.

Flow chart

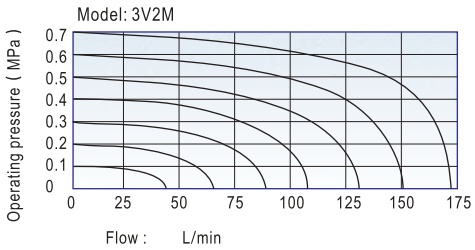

Ordering code

Ordering code for valve　3V2M NC A □

- **Model**: 3V2M: Solenoid valve(3/2 way, with manifold)
- **Acting type**: NC: Normally closed; NO: Normally opened
- **Voltage**: A: AC220V; B: DC24V; C: AC110V; E: AC24V; F: DC12V
- **Electrical entry**: Blank: Terminal; I: Grommet

Ordering code for manifold　3V2M 5F D G

- **Model**: 3V2M: Solenoid valve (3/2 way, with manifold)
- **Number of stations**: 1F: 1 Station; 2F: 2 Station; ……; 20F: 20 Station
- **Exhaust type**: Blank: Centralized exhaust; D: Separated exhaust
- **Thread type**: G: G; T: NPT

Note：Manifold kits contains manifold, seal and screw. The port size is only 1/8".

Ordering code for blank plate　P–3V2M R2

- **Model**: 3V2M: Solenoid valve(3/2 way, with manifold)
- **Code**: R2: Blank plate for manifold

Note：Blank plate kits contains blank plate and screw.

Ordering code for valve's group(valve+manifold)　3V2M NC A □–D 5F G

- **Model**: 3V2M: Solenoid valve (3/2 way, with manifold)
- **Acting type**: NC: Normally closed; NO: Normally opened
- **Thread type**: G: G; T: NPT
- **Number of stations**: 1F: 1 Station; 2F: 2 Station; ……; 20F: 20 Station
- **Voltage**: A: AC220V; B: DC24V; C: AC110V; E: AC24V; F: DC12V
- **Electrical entry**: Blank: Terminal; I: Grommet
- **Exhaust type**: Blank: Centralized exhaust; D: Separated exhaust

Inner structure

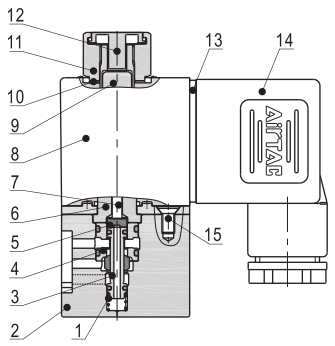

No.	Item
1	Spring
2	Body
3	Spool
4	Spacer
5	Washer
6	Electromagnet set
7	Man drill
8	Coil
9	Armature
10	Washer
11	Coil nut
12	Manual button
13	Gasket
14	Connector
15	Pilot screw

Dimensions

Valve(Terminal)

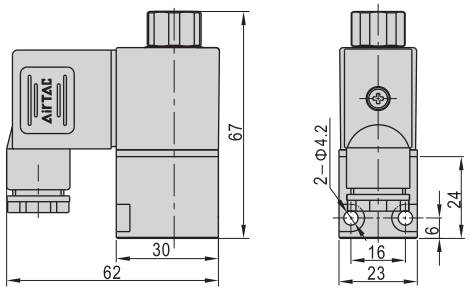

Valve(Grommet)

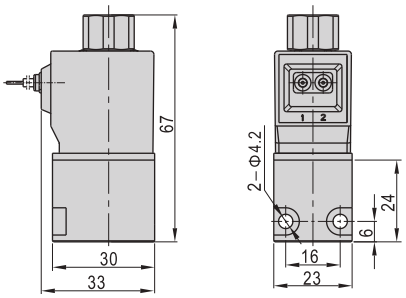

Valve's group(Terminal, Centralized exhaust)

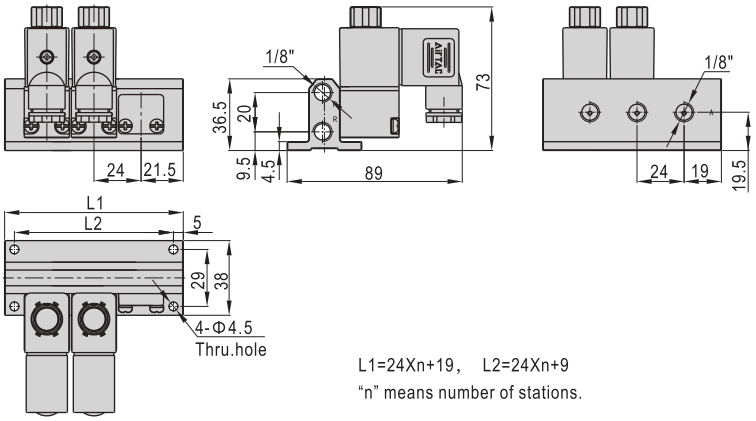

L1=24Xn+19, L2=24Xn+9
"n" means number of stations.

Valve's group(Terminal, Separated exhaust)

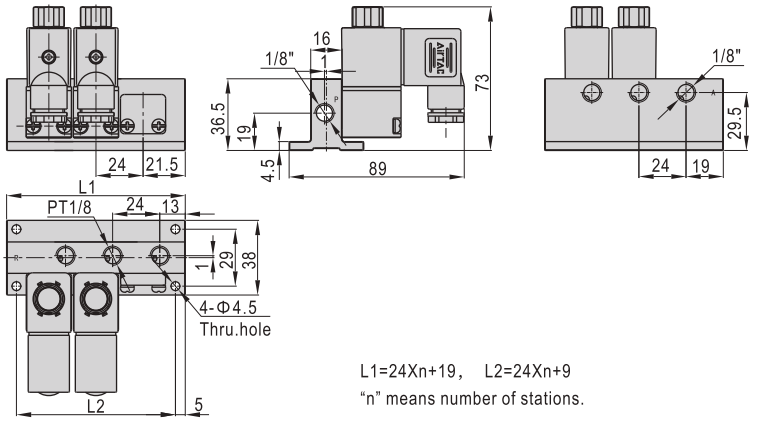

L1=24Xn+19, L2=24Xn+9
"n" means number of stations.

Valve's group(Grommet, Centralized exhaust)

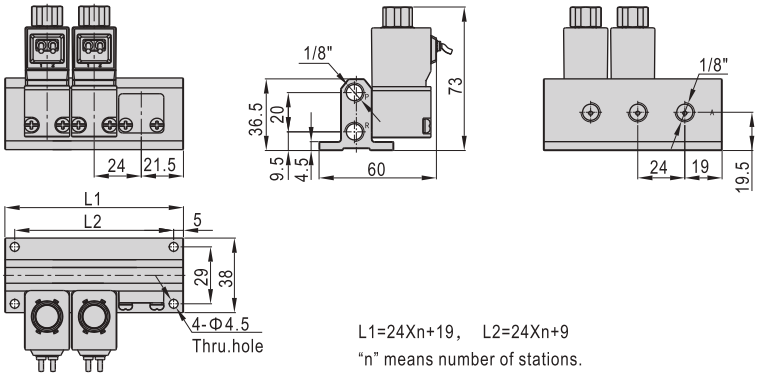

L1=24Xn+19, L2=24Xn+9
"n" means number of stations.

Valve's group(Grommet, Separated exhaust)

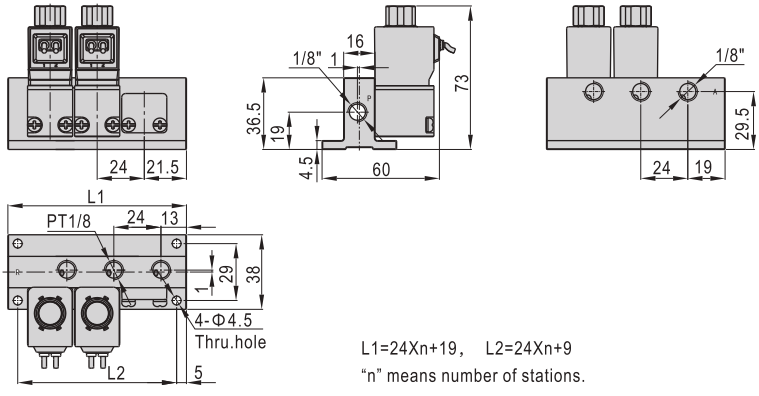

L1=24Xn+19, L2=24Xn+9
"n" means number of stations.

3V3

Specification

Model		3V308
Fluid		Air(to be filtered by 40 μ m filter element)
Acting		Direct acting
Port size ①		1/4"
Valve type		3 port 2 position
Orifice size		11mm²(Cv=0.62)
Lubrication		Not required
Operating pressure	Common	0~0.8MPa(0~114psi)
	vacuum	-101.2kPa~0.1MPa(-14.8~14.5psi)
Proof pressure		1.5MPa(215psi)
Temperature ℃		-20~70
Material of body		Aluminum alloy

① G thread and NPT thread are available.

Symbol

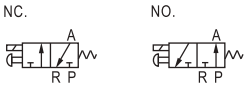

Coil specification

Item	Specitification
Standard voltage	AC220V, AC110V, AC24V, DC24V, DC12V
Scope of voltage	AC: ± 15% DC: ± 10%
Power consumption	AC:10VA DC:6.5W
Protection	IP65(DIN40050)
Temperature classification	B Class
Electrical entry	Terminal, Grommet
Activating time	0.05 sec and below
Max. frequency ①	10 cycle/sec

① The maximum actuation frequency is in the no-load state.

Product feature

1. Direct acting type and normally closed mode, flexible in direction change.
2. Normally closed and normally open types are optional.
3. Structure in coaxial blanking mode: leakage proof and large air flow.
4. No need to add oil for lubrication.
5. Affiliated manual devices are equipped to facilitate installation and debugging.
6. Several standard voltage grades are optional.
7. Can be used under vacuum condition.

Ordering code

3V 3 08 NC A □ G

- **Model**: 3V: Solenoid valve(3/2 way)
- **Code**: 3: 3 Series
- **Port size**: 08: 1/4"
- **Acting type**: NC: Normally closed; NO: Normally opened
- **Voltage**: A: AC220V; B: DC24V; C: AC110V; E: AC24V; F: DC12V
- **Electrical entry**: Blank: Terminal; I: Grommet
- **Thread type**: G: G; T: NPT

Flow chart

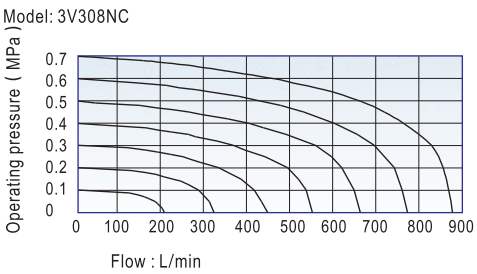

Inner structure

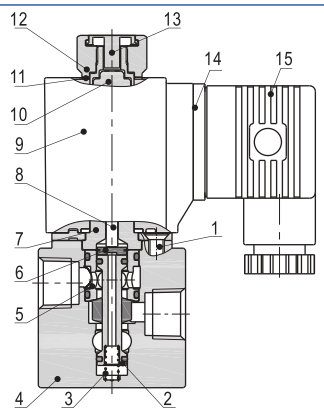

No.	Item	No.	Item
1	Pilot screw	9	Coil
2	Spool	10	Armature
3	Spring	11	Washer
4	Body	12	Coil nut
5	Washer	13	Manual button
6	Spacer	14	Gasket
7	Electromagnet set	15	Connector
8	Man drill		

Dimensions

Terminal

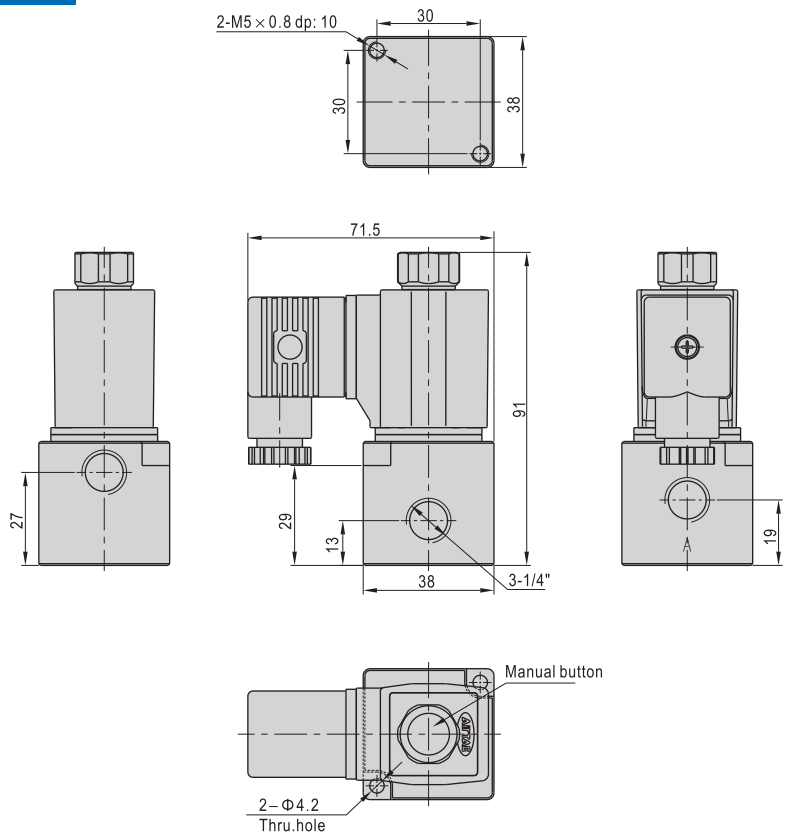

Grommet

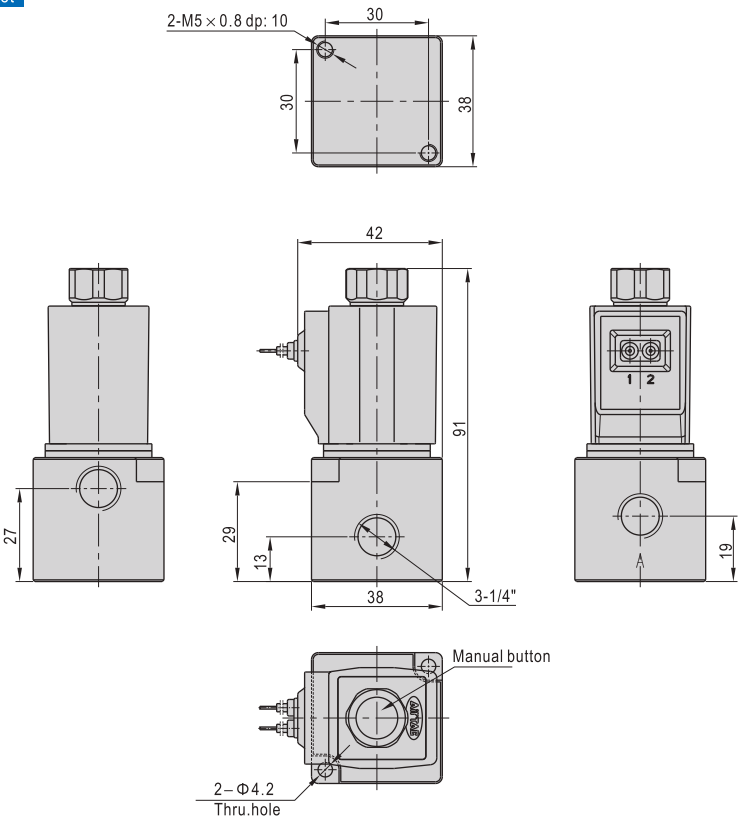

3V100

Symbol

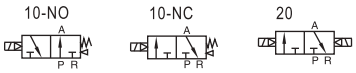

Product feature

1. Pilot-oriented mode:Internal pilot or external pilot.
2. Structure in sliding column mode: good tightness and sensitive reaction.
3. Double control solenoid valves have memory function.
4. Internal hole adopts special processing technology which has little attrition friction, low start pressure and long service life.
5. No need to add oil for lubrication.
6. Affiliated manual devices are equipped to facilitate installation and debugging.
7. Several standard voltage grades are optional.
8. Integrate with the manifold to save installation space.

Flow chart

Model: 3V110－06－NO

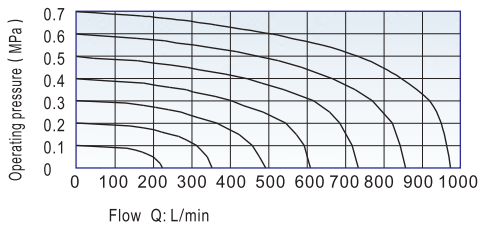

Specification

Model	3V110-M5	3V120-M5	3V110-06	3V120-06
Fluid	Air(to be filtered by 40 μ m filter element)			
Acting	Internal pilot or external pilot			
Port size ①	M5		1/8"	
Orifice size	5.5mm²(Cv=0.31)		12.0mm²(Cv=0.67)	
Valve type	3 port 2 position			
Lubrication ②	Not required			
Operating pressure	0.15~0.8MPa(21~114psi)			
Proof pressure	1.5MPa(215psi)			
Temperature ℃	-20~70			
Material of body	Aluminum alloy			

① G thread and NPT thread are available.
② Once lubricated air is used, continue with same medium to optimise valve life span. Lubricants like ISO VG32 or equivalent are recommended.

Coil specification

Item	Specitification
Standard voltage	AC220V, AC110V, AC24V, DC24V, DC12V
Scope of voltage	AC: ± 15% DC: ± 10%
Power consumption	AC:2.5VA DC:2.5W
Protection	IP65(DIN40050)
Temperature classification	B Class
Electrical entry	Terminal, Grommet
Activating time	0.05 sec and below
Max. frequency ①	5 cycle/sec

① The maximum actuation frequency is in the no-load state.

Ordering code

3V 1 10 06 NO A □ G–W

Model
3V: Solenoid valve(3/2 way)

Code
1: 100 Series

Valve type
10: Single solenoid
20: Double solenoid

Port size
M5: M5
06: 1/8"

Acting type

Valve type	Acting type
10	NC: Normally closed
	NO: Normally opened
20	Not code

Voltage
A: AC220V
B: DC24V
C: AC110V
E: AC24V
F: DC12V

Electrical entry
Blank: Terminal
I: Grommet

Thread type

Port size	Thread type
1/8"	G: G
	T:NPT
M5	Not this code

Pilot type
Blank: Internal pilot

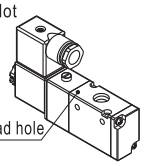

W: External pilot

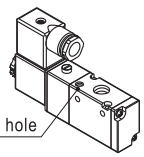

Please refer to 38 for manifold specification and the order way.

Inner structure

3V110

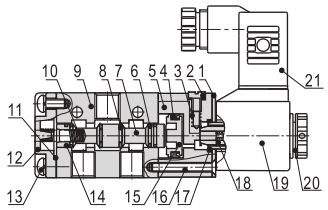

3V110

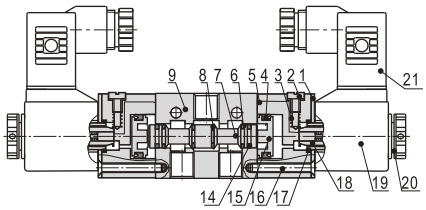

No.	Item	No.	Item	NO.	Item
1	Fixed plate	8	O-ring	15	Piston
2	Manual override	9	Body	16	Pilot screw
3	Override spring	10	Spool spring	17	O-ring
4	Piston O-ring	11	Bottom cover gasket	18	Armature
5	Pilot body	12	Bottom cover	19	Coil
6	Spool packing	13	Screw	20	Coil net
7	Spool	14	Wear ring	21	Connector

Dimensions

3V110(Terminal)

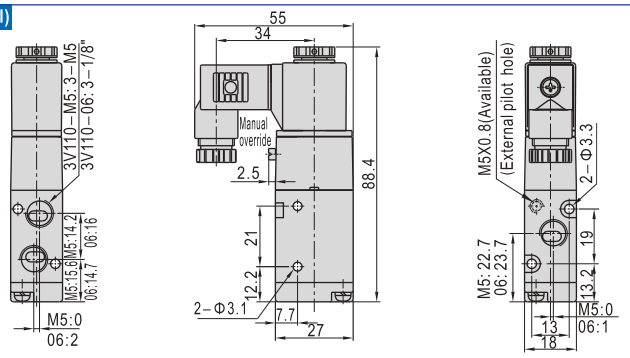

3V110(Grommet)

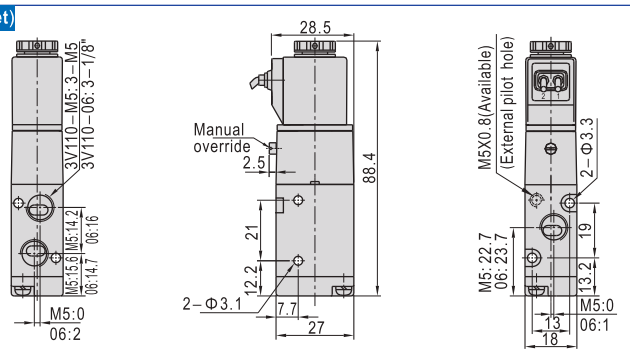

3V120(Terminal)

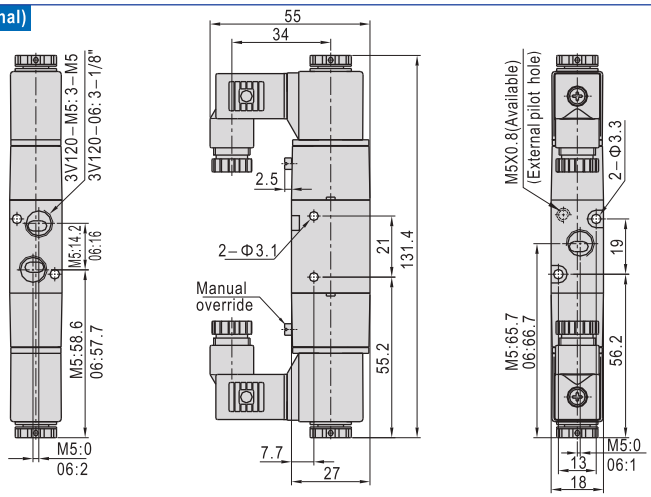

3V120(Grommet)

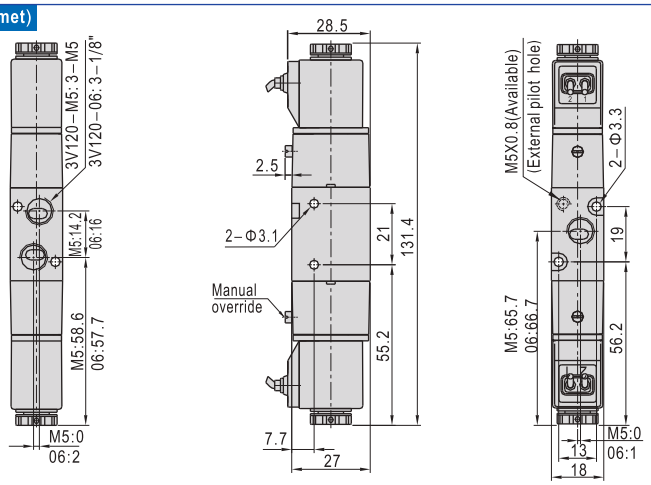

3V200

Symbol

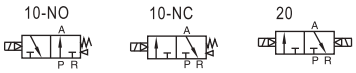

Product feature

1. Pilot-oriented mode:Internal pilot or external pilot.
2. Structure in sliding column mode: good tightness and sensitive reaction.
3. Double control solenoid valves have memory function.
4. Internal hole adopts special processing technology which has little attrition friction, low start pressure and long service life.
5. No need to add oil for lubrication.
6. Affiliated manual devices are equipped to facilitate installation and debugging.
7. Several standard voltage grades are optional.
8. Integrate with the manifold to save installation space.

Flow chart

Model: 3V210−08−NO

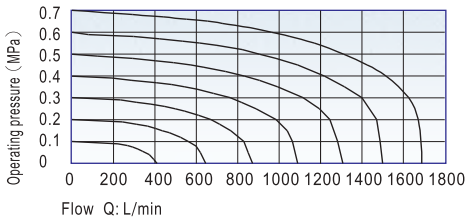

Specification

Model	3V210-06	3V220-06	3V210-08	3V220-08
Fluid	Air(to be filtered by 40 μ m filter element)			
Acting	Internal pilot or external pilot			
Port size ①	In=Out=1/8"		In=Out=1/4"	
Orifice size	14.0mm²(Cv=0.78)		16.0mm²(Cv=0.89)	
Valve type	3 port 2 position			
Lubrication ②	Not required			
Operating pressure	0.15~0.8MPa(21~114psi)			
Proof pressure	1.5MPa(215psi)			
Temperature ℃	-20~70			
Material of body	Aluminum alloy			

① G thread and NPT thread are available.
② Once lubricated air is used, continue with same medium to optimise valve life span. Lubricants like ISO VG32 or equivalent are recommended.

Coil specification

Item	Specitification
Standard voltage	AC220V, AC110V, AC24V, DC24V, DC12V
Scope of voltage	AC: ± 15% DC: ± 10%
Power consumption	AC:3.5VA DC:3.0W
Protection	IP65(DIN40050)
Temperature classification	B Class
Electrical entry	Terminal, Grommet
Activating time	0.05 sec and below
Max. frequency ①	5 cycle/sec

① The maximum actuation frequency is in the no-load state.

Ordering code

3V 2 10 08 NO A □ G−W

Model
3V: Solenoid valve(3/2 way)

Code
2: 200 Series

Valve type
10: Single solenoid
20: Double solenoid

Port size
06: 1/8"
08: 1/4"

Acting type

Valve type	Acting type
10	NC: Normally closed
	NO: Normally opened
20	Not code

Pilot type
Blank: Internal pilot

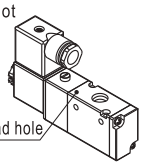

W: External pilot

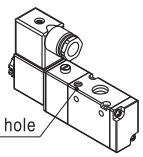

Thread type
G: G
T: NPT

Voltage
A: AC220V
B: DC24V
C: AC110V
E: AC24V
F: DC12V

Electrical entry
Blank: Terminal
I: Grommet

Please refer to 38 for manifold specification and the order way.

Inner structure

3V210

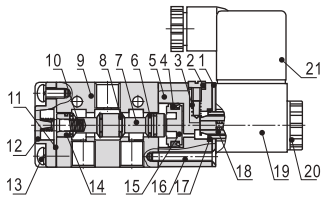

3V220

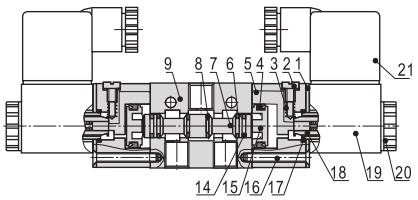

No.	Item	No.	Item	NO.	Item
1	Fixed plate	8	O-ring	15	Piston
2	Manual override	9	Body	16	Pilot screw
3	Override spring	10	Spool spring	17	O-ring
4	Piston O-ring	11	Bottom cover gasket	18	Armature
5	Pilot body	12	Bottom cover	19	Coil
6	Spool packing	13	Screw	20	Coil net
7	Spool	14	Wear ring	21	Connector

Dimensions

3V210(Terminal)

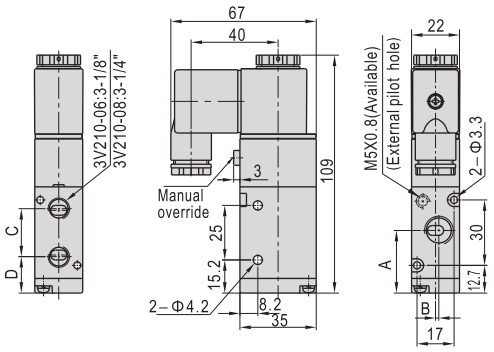

Item\Model	3V210-06	3V210-08
A	27.7	28.7
B	0	1.5
C	22	22.5
D	16.7	16.5

3V210(Grommet)

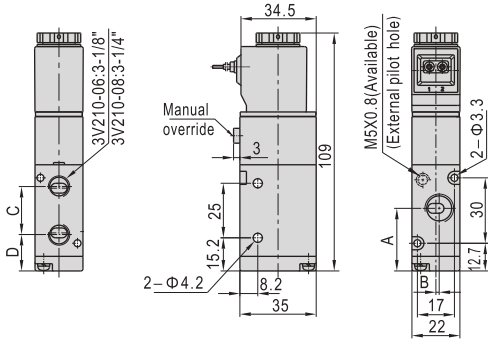

Item\Model	3V210-06	3V210-08
A	27.7	28.7
B	0	1.5
C	22	22.5
D	16.7	16.5

3V220(Terminal)

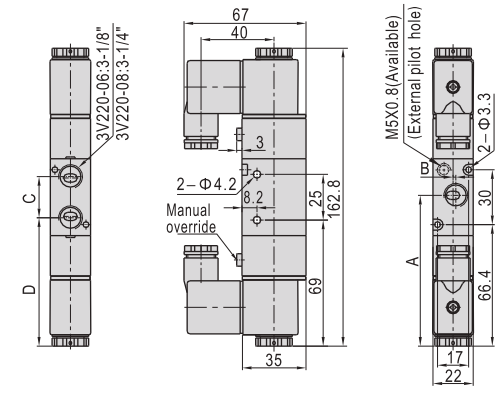

Item\Model	3V210-06	3V210-08
A	81.4	82.4
B	0	1.5
C	22	22.5
D	70.4	70.2

3V220(Grommet)

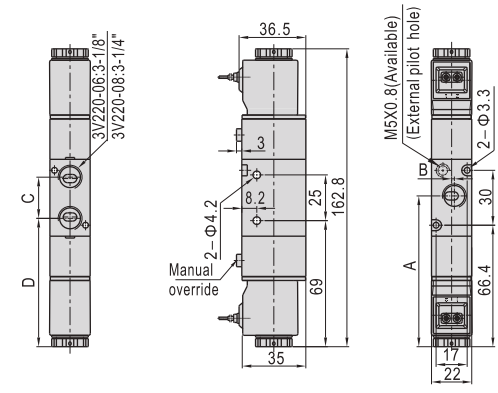

Item\Model	3V210-06	3V210-08
A	81.4	82.4
B	0	1.5
C	22	22.5
D	70.4	70.2

Symbol

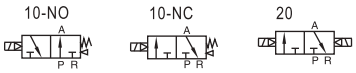

Product feature

1. Pilot-oriented mode: Internal pilot or external pilot.
2. Structure in sliding column mode: good tightness and sensitive reaction.
3. Double control solenoid valves have memory function.
4. Internal hole adopts special processing technology which has little attrition friction, low start pressure and long service life.
5. No need to add oil for lubrication.
6. Affiliated manual devices are equipped to facilitate installation and debugging.
7. Several standard voltage grades are optional.
8. Integrate with the manifold to save installation space.

Flow chart

Model: 3V310−10−NO

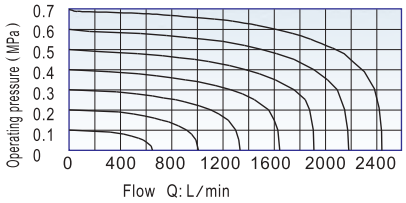

Specification

Model	3V310-08	3V320-08	3V310-10	3V320-10
Fluid	Air(to be filtered by 40 μ m filter element)			
Acting	Internal pilot or external pilot			
Port size ①	In=Out=1/4"		In=Out=3/8"	
Orifice size	25.0mm²(Cv=1.39)		30.0mm²(Cv=1.67)	
Valve type	3 port 2 position			
Lubrication ②	Not required			
Operating pressure	0.15~0.8MPa(21~114psi)			
Proof pressure	1.5MPa(215psi)			
Temperature ℃	-20~70			
Material of body	Aluminum alloy			

① G thread and NPT thread are available.
② Once lubricated air is used, continue with same medium to optimise valve life span. Lubricants like ISO VG32 or equivalent are recommended.

Coil specification

Item	Specitification
Standard voltage	AC220V, AC110V, AC24V, DC24V, DC12V
Scope of voltage	AC: ± 15% DC: ± 10%
Power consumption	AC:3.5VA DC:3.0W
Protection	IP65(DIN40050)
Temperature classification	B Class
Electrical entry	Terminal, Grommet
Activating time	0.05 sec and below
Max. frequency ①	5 cycle/sec

① The maximum actuation frequency is in the no-load state.

Ordering code

3V 3 10 10 NO A □ G–W

Model
3V: Solenoid valve(3/2 way)

Code
3: 300 Series

Valve type
10: Single solenoid
20: Double solenoid

Port size
08: 1/4"
10: 3/8"

Acting type

Valve type	Acting type
10	NC: Normally closed
	NO: Normally opened
20	Not code

Voltage
A: AC220V
B: DC24V
C: AC110V
E: AC24V
F: DC12V

Electrical entry
Blank: Terminal
I: Grommet

Thread type
G: G
T: NPT

Pilot type
Blank: Internal pilot

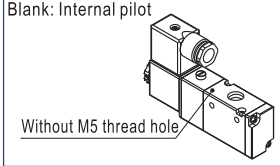

W: External pilot

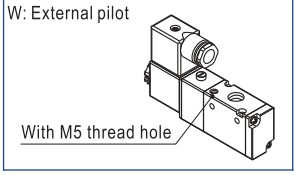

Please refer to 38 for manifold specification and the order way.

Inner structure

3V310

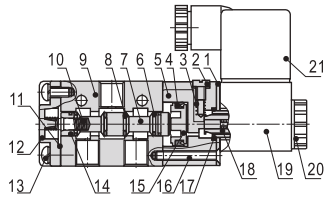

3V320

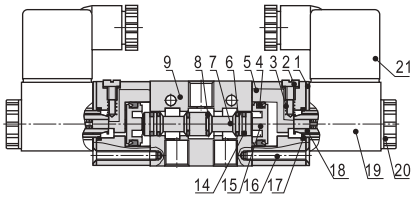

No.	Item	No.	Item	NO.	Item
1	Fixed plate	8	O-ring	15	Piston
2	Manual override	9	Body	16	Pilot screw
3	Override spring	10	Spool spring	17	O-ring
4	Piston O-ring	11	Bottom cover gasket	18	Armature
5	Pilot body	12	Bottom cover	19	Coil
6	Spool packing	13	Screw	20	Coil net
7	Spool	14	Wear ring	21	Connector

Dimensions

3V310(Terminal)

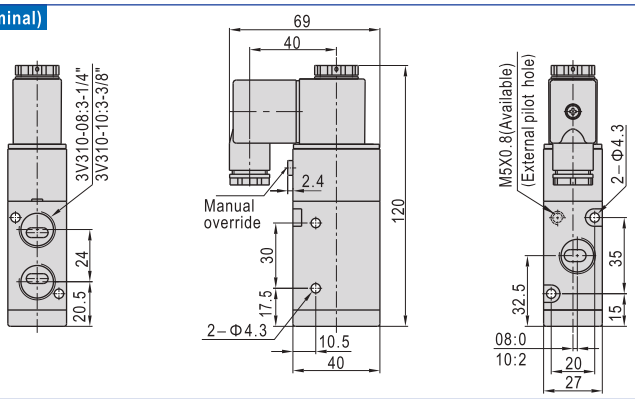

3V310(Grommet)

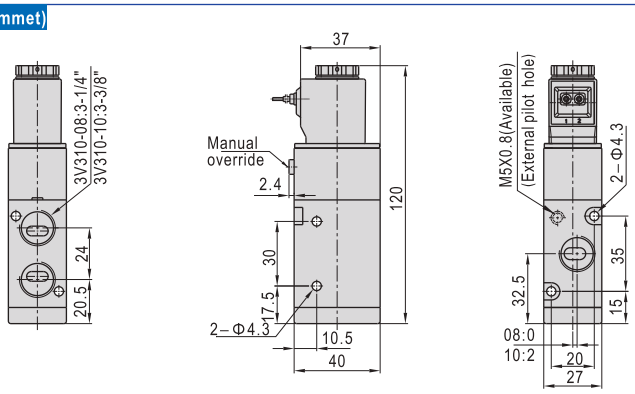

3V320(Terminal)

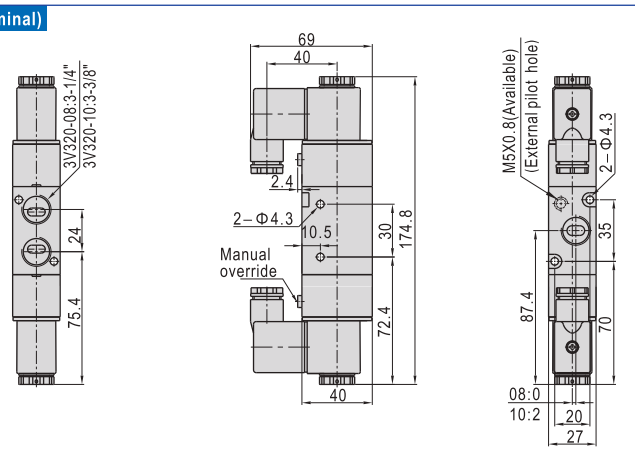

3V320(Grommet)

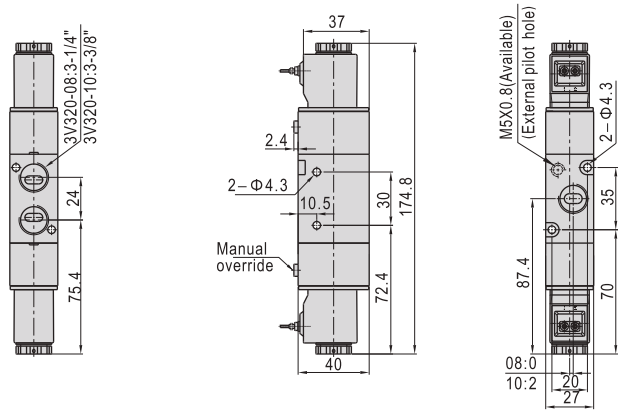

Symbol

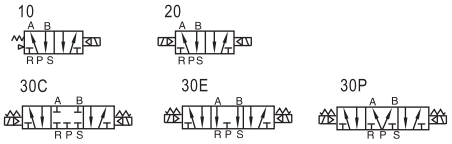

Product feature

1. Pilot-oriented mode:Internal pilot or external pilot.
2. Structure in sliding column mode: good tightness and sensitive reaction.
3. Three position solenoid valves have three kinds of central function for your choice.
4. Double control solenoid valves have memory function.
5. Internal hole adopts special processing technology which has little attrition friction, low start pressure and long service life.
6. No need to add oil for lubrication.
7. It is available to form integrated valve group with the base to save installation space.
8. Affiliated manual devices are equipped to facilitate installation and debugging.
9. Several standard voltage grades are optional.

Flow chart

Model: 4V110－M5

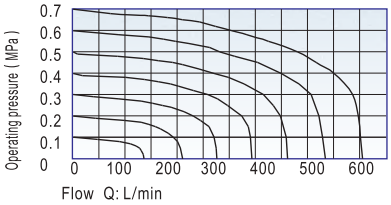

Model: 4V110－06

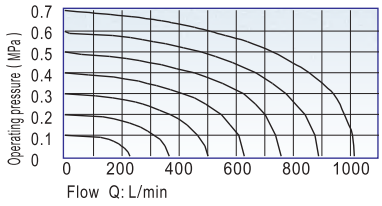

Specification

Model	4V110-M5 4V120-M5	4V130C-M5 4V130E-M5 4V130P-M5	4V110-06 4V120-06	4V130C-06 4V130E-06 4V130P-06
Fluid	Air(to be filtered by 40 μ m filter element)			
Acting	Internal pilot or external pilot			
Port size ①	In=Out=M5		In=Out=1/8"	
Orifice size	5.5mm² (Cv=0.31)	5.0mm² (Cv=0.28)	12.0mm² (Cv=0.67)	9.0mm² (Cv=0.50)
Valve type	5 port 2 position	5 port 3 position	5 port 2 position	5 port 3 position
Operating pressure	0.15~0.8MPa(21~114psi)			
Proof pressure	1.5MPa(215psi)			
Temperature ℃	-20~70			
Material of body	Aluminum alloy			
Lubrication ②	Not required			
Max. frequency ③	5 cycle/sec	3 cycle/sec	5 cycle/sec	3 cycle/sec
Weight	4V110-M5:120g 4V120-M5:175g	200g	4V110-06:120g 4V120-06:175g	200g

① G thread and NPT thread are available.
② Once lubricated air is used, continue with same medium to optimise valve life span. Lubricants like ISO VG32 or equivalent are recommended.
③ The maximum actuation frequency is in the no-load state.

Coil specification

Item	Specitification
Standard voltage	AC220V, AC110V, AC24V, DC24V, DC12V
Scope of voltage	AC: ± 15% DC: ± 10%
Power consumption	AC:2.5VA DC:2.5W
Protection	IP65(DIN40050)
Temperature classification	B Class
Electrical entry	Terminal, Grommet
Activating time	0.05 sec and below

Ordering code

4V 1 10 06 A □ G–W

Model
4V: Solenoid valve(5/2, 5/3 way)

Code
1: 100 Series

Valve type

10: Single solenoid 5/2 way
20: Double solenoid 5/2 way
30C: Double solenoid 5/3 way closed center
30E: Double solenoid 5/3 way exhaust center
30P: Double solenoid 5/3 way pressure center

Port size

M5: M5
06: 1/8"

Voltage

A: AC220V
B: DC24V
C: AC110V
E: AC24V
F: DC12V

Pilot type

Blank: Internal pilot

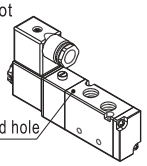

W: External pilot

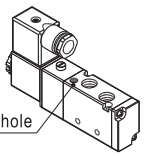

Thread type

Port size	Thread type
1/8"	G: G
	T: NPT
M5	Not this code

Electrical entry

Blank: Terminal
I: Grommet

Please refer to 39 for manifold specification and the order way.

Inner structure

4V110

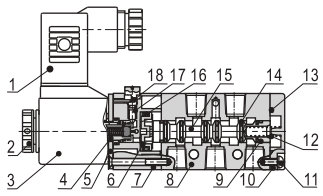

4V120

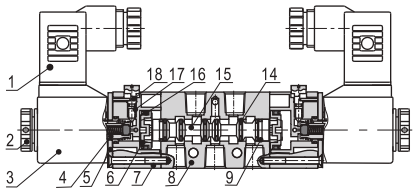

4V130C

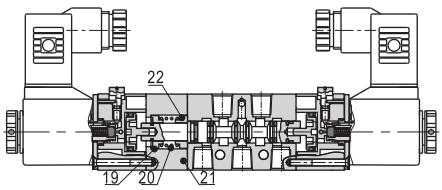

No.	Item	No.	Item	N0.	Item
1	Connector	9	Wear ring	17	Override spring
2	Coil net	10	Bottom cover	18	Manual override
3	Coil	11	Fixed screw	19	Spring holder
4	Armature	12	Spool spring	20	Return spring
5	Fixed plate	13	Bottom cover gasket	21	Side cover
6	Piston	14	Spool O-ring	22	Spring holder
7	Pilot kit	15	Spool		
8	Body	16	Piston O-ring		

Dimensions

4V110(Terminal)

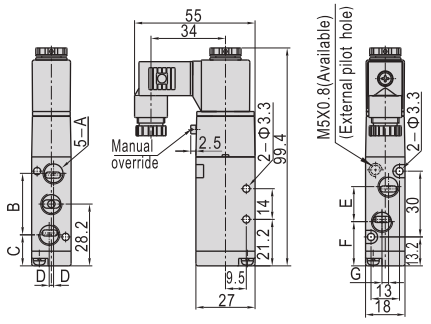

4V110(Grommet)

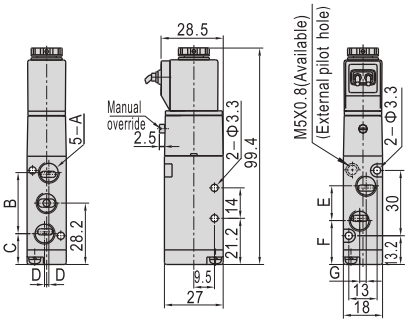

Model\Item	A	B	C	D	E	F	G
4V110-M5	M5x0.8	27	14.7	0	14	21.2	0
4V110-06	1/8"	28	14.2	1	16	20.2	3

4V120(Terminal)

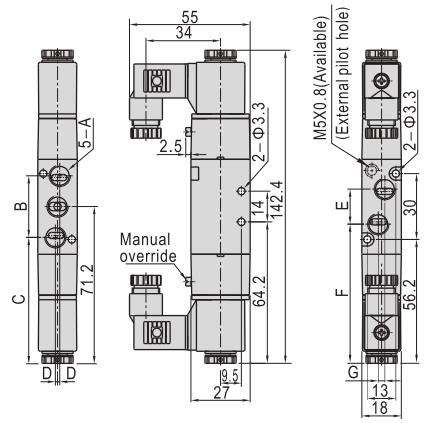

4V120(Grommet)

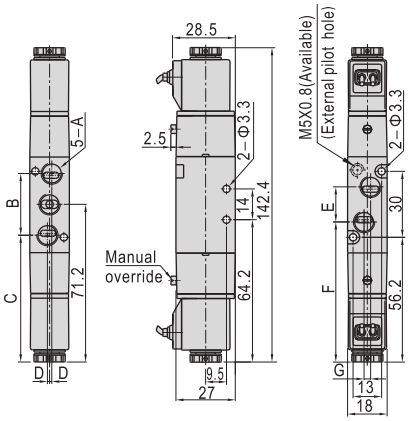

Model\Item	A	B	C	D	E	F	G
4V120-M5	M5x0.8	27	57.7	0	14	64.3	0
4V120-06	1/8"	28	57.2	1	16	63.2	3

4V130(Terminal)

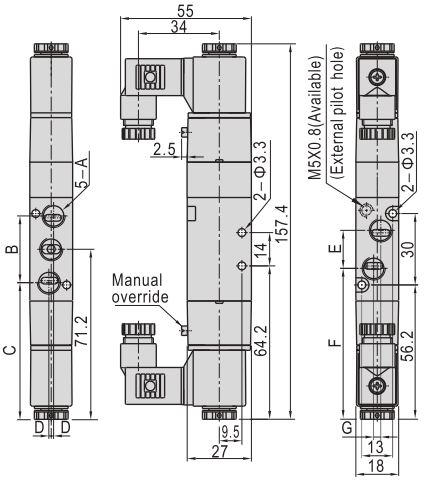

4V130(Grommet)

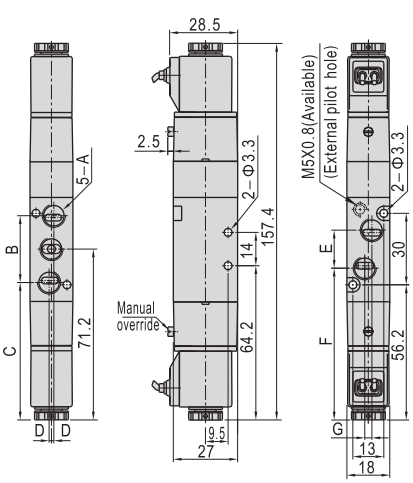

Model\Item	A	B	C	D	E	F	G
4V130-M5	M5x0.8	27	57.7	0	14	64.3	0
4V130-06	1/8"	28	57.2	1	16	63.2	3

Symbol

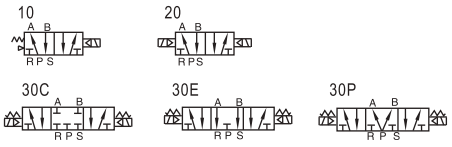

Product feature

1. Pilot-oriented mode:Internal pilot or external pilot.
2. Structure in sliding column mode: good tightness and sensitive reaction.
3. Three position solenoid valves have three kinds of central function for your choice.
4. Double control solenoid valves have memory function.
5. Internal hole adopts special processing technology which has little attrition friction, low start pressure and long service life.
6. No need to add oil for lubrication.
7. It is available to form integrated valve group with the base to save installation space.
8. Affiliated manual devices are equipped to facilitate installation and debugging.
9. Several standard voltage grades are optional.

Flow chart

Model: 4V210–06

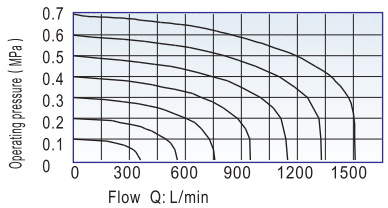

Model: 4V210–08

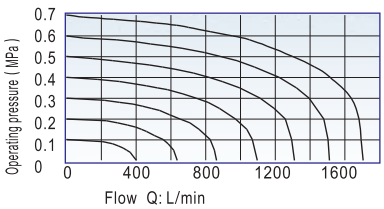

Specification

Model	4V210-06 4V220-06	4V230C-06 4V230E-06 4V230P-06	4V210-08 4V220-08	4V230C-08 4V230E-08 4V230P-08
Fluid	Air(to be filtered by 40 μ m filter element)			
Acting	Internal pilot or external pilot			
Port size ①	In=Out=Exhaust=1/8"		In=Out=1/4" Exhaust=1/8"	
Orifice size	14.0mm² (Cv=0.78)	12.0mm² (Cv=0.67)	16.0mm² (Cv=0.89)	12.0mm² (Cv=0.67)
Valve type	5 port 2 position	5 port 3 position	5 port 2 position	5 port 3 position
Operating pressure	0.15~0.8MPa(21~114psi)			
Proof pressure	1.5MPa(215psi)			
Temperature ℃	-20~70			
Material of body	Aluminum alloy			
Lubrication ②	Not required			
Max. frequency ③	5 cycle/sec	3 cycle/sec	5 cycle/sec	3 cycle/sec
Weight	4V210-06:220g 4V220-06:320g	360g	4V210-08:220g 4V220-08:320g	360g

① G thread and NPT thread are available.
② Once lubricated air is used, continue with same medium to optimise valve life span. Lubricants like ISO VG32 or equivalent are recommended.
③ The maximum actuation frequency is in the no-load state.

Coil specification

Item	Specitification
Standard voltage	AC220V, AC110V, AC24V, DC24V, DC12V
Scope of voltage	AC: ± 15% DC: ± 10%
Power consumption	AC:3.5VA DC:3.0W
Protection	IP65(DIN40050)
Temperature classification	B Class
Electrical entry	Terminal, Grommet
Activating time	0.05 sec and below

Ordering code

4V 2 10 08 A □ G –W

Model
4V: Solenoid valve(5/2, 5/3 way)

Code
2: 200 Series

Valve type
10: Single solenoid 5/2 way
20: Double solenoid 5/2 way
30C: Double solenoid 5/3 way closed center
30E: Double solenoid 5/3 way exhaust center
30P: Double solenoid 5/3 way pressure center

Port size
06: 1/8"
08: 1/4"

Voltage
A: AC220V
B: DC24V
C: AC110V
E: AC24V
F: DC12V

Thread type
G: G
T: NPT

Electrical entry
Blank: Terminal
I: Grommet

Pilot type
Blank: Internal pilot
Without M5 thread hole
W: External pilot
With M5 thread hole

Please refer to 39 for manifold specification and the order way.

Inner structure

4V210

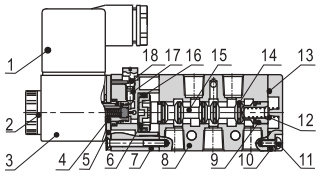

4V220

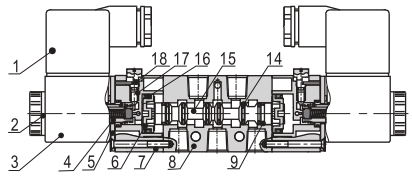

4V230C

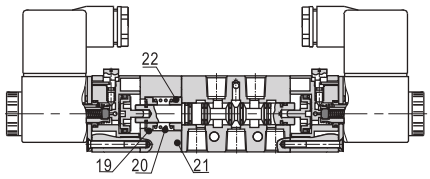

No.	Item	No.	Item	N0.	Item
1	Connector	9	Wear ring	17	Override spring
2	Coil net	10	Bottom cover	18	Manual override
3	Coil	11	Fixed screw	19	Spring holder
4	Armature	12	Spool spring	20	Return spring
5	Fixed plate	13	Bottom cover gasket	21	Side cover
6	Piston	14	Spool O-ring	22	Spring holder
7	Pilot kit	15	Spool		
8	Body	16	Piston O-ring		

Dimensions

4V210(Terminal)

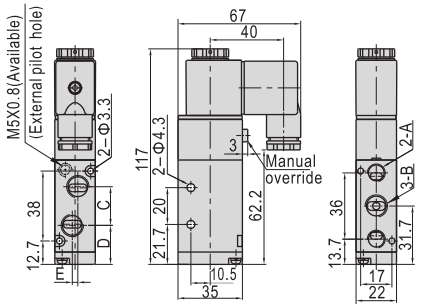

Model\Item	A	B	C	D	E
4V210-06	1/8"	1/8"	18	22.7	0
4V210-08	1/8"	1/4"	21	21.2	3

4V210(Grommet)

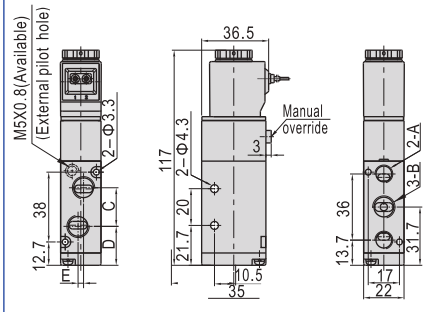

4V220(Terminal)

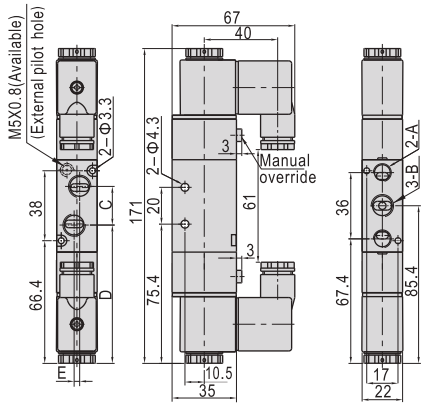

Model\Item	A	B	C	D	E
4V220-06	1/8"	1/8"	18	76.4	0
4V220-08	1/8"	1/4"	21	74.9	3

4V220(Grommet)

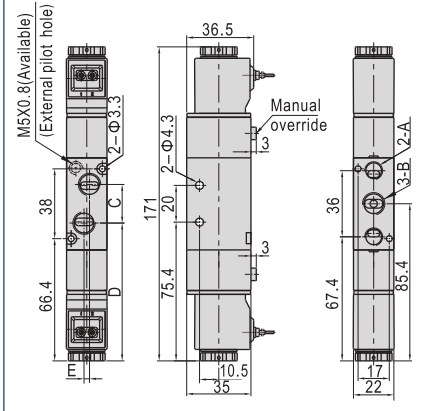

4V230(Terminal)

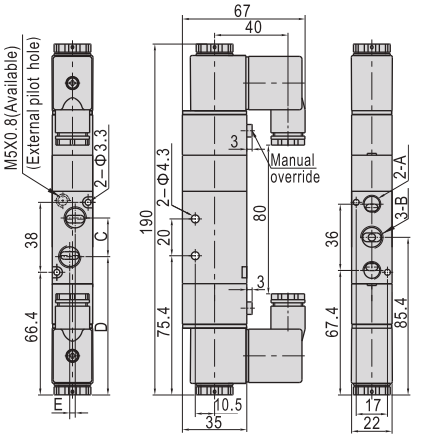

Model\Item	A	B	C	D	E
4V230-06	1/8"	1/8"	18	76.4	0
4V230-08	1/8"	1/4"	21	74.9	3

4V230(Grommet)

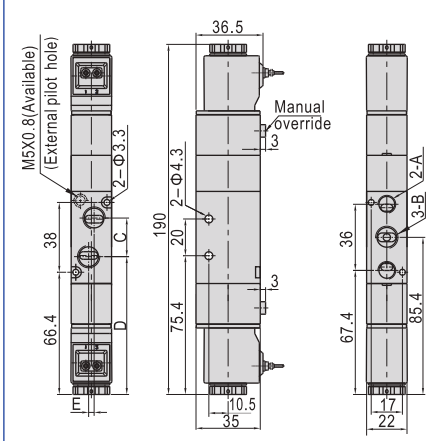

Solenoid valve(5/2 way,5/3 way)

4V300 Series

Symbol

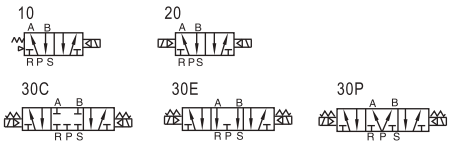

Product feature

1. Pilot-oriented mode:Internal pilot or external pilot.
2. Structure in sliding column mode: good tightness and sensitive reaction.
3. Three position solenoid valves have three kinds of central function for your choice.
4. Double control solenoid valves have memory function.
5. Internal hole adopts special processing technology which has little attrition friction, low start pressure and long service life.
6. No need to add oil for lubrication.
7. It is available to form integrated valve group with the base to save installation space.
8. Affiliated manual devices are equipped to facilitate installation and debugging.
9. Several standard voltage grades are optional.

Flow chart

Model: 4V310−08

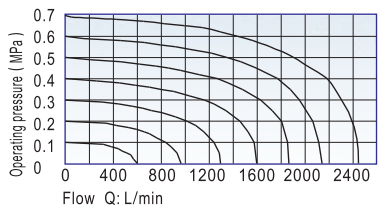

Model: 4V310−10

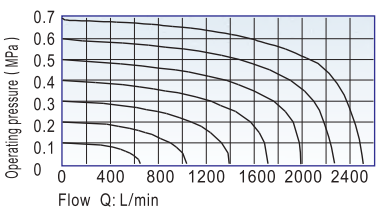

Specification

Model	4V310-08 4V320-08	4V330C-08 4V330E-08 4V330P-08	4V310-10 4V320-10	4V330C-10 4V330E-10 4V330P-10
Fluid	Air(to be filtered by 40 μ m filter element)			
Acting	Internal pilot or external pilot			
Port size ①	In=Out=Exhaust=1/4"		In=Out=3/8" Exhaust=1/4"	
Orifice size	25.0mm² (Cv=1.40)	18.0mm² (Cv=1.00)	30.0mm² (Cv=1.68)	18.0mm² (Cv=1.00)
Valve type	5 port 2 position	5 port 3 position	5 port 2 position	5 port 3 position
Operating pressure	0.15~0.8MPa(21~114psi)			
Proof pressure	1.5MPa(215psi)			
Temperature ℃	-20~70			
Material of body	Aluminum alloy			
Lubrication ②	Not required			
Max. frequency ③	4 cycle/sec	3 cycle/sec	4 cycle/sec	3 cycle/sec
Weight	4V310-08:310g 4V320-08:400g	450g	4V310-10:310g 4V320-10:400g	450g

① G thread and NPT thread are available.

② Once lubricated air is used, continue with same medium to optimise valve life span. Lubricants like ISO VG32 or equivalent are recommended.

③ The maximum actuation frequency is in the no-load state.

Coil specification

Item	Specitification
Standard voltage	AC220V, AC110V, AC24V, DC24V, DC12V
Scope of voltage	AC: ± 15% DC: ± 10%
Power consumption	AC:3.5VA DC:3.0W
Protection	IP65(DIN40050)
Temperature classification	B Class
Electrical entry	Terminal, Grommet
Activating time	0.05 sec and below

Ordering code

4V 3 10 10 A □ G –W

Model
4V: Solenoid valve(5/2, 5/3 way)

Code
3: 300 Series

Valve type
10: Single solenoid 5/2 way
20: Double solenoid 5/2 way
30C: Double solenoid 5/3 way closed center
30E: Double solenoid 5/3 way exhaust center
30P: Double solenoid 5/3 way pressure center

Port size
08: 1/4"
10: 3/8"

Voltage
A: AC220V
B: DC24V
C: AC110V
E: AC24V
F: DC12V

Thread type
G: G
T: NPT

Electrical entry
Blank: Terminal
I: Grommet

Pilot type
Blank: Internal pilot
Without M5 thread hole
W: External pilot
With M5 thread hole

Please refer to 39 for manifold specification and the order way.

Inner structure

4V310

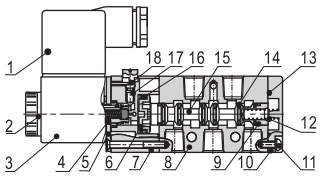

4V320

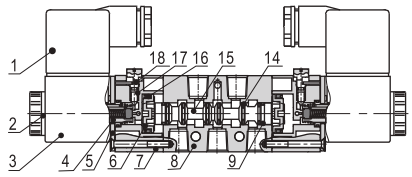

4V330C

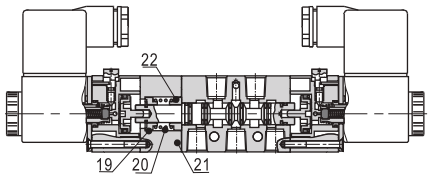

No.	Item	No.	Item	NO.	Item
1	Connector	9	Wear ring	17	Override spring
2	Coil net	10	Bottom cover	18	Manual override
3	Coil	11	Fixed screw	19	Spring holder
4	Armature	12	Spool spring	20	Return spring
5	Fixed plate	13	Bottom cover gasket	21	Side cover
6	Piston	14	Spool O-ring	22	Spring holder
7	Pilot kit	15	Spool		
8	Body	16	Piston O-ring		

Dimensions

4V310(Terminal)

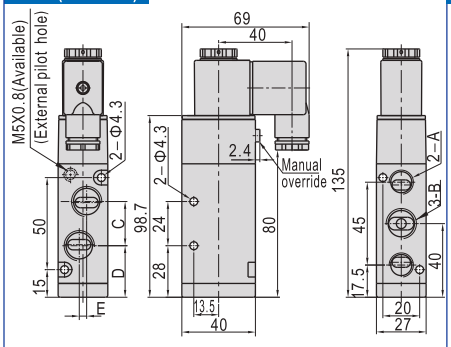

4V310(Grommet)

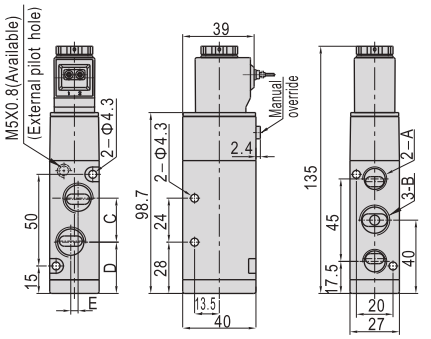

Model\Item	A	B	C	D	E
4V310-08	1/4"	1/4"	22	29	0
4V310-10	1/4"	3/8"	24	28	4

4V320(Terminal)

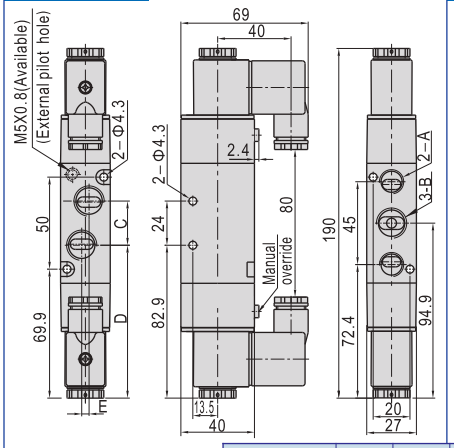

4V320(Grommet)

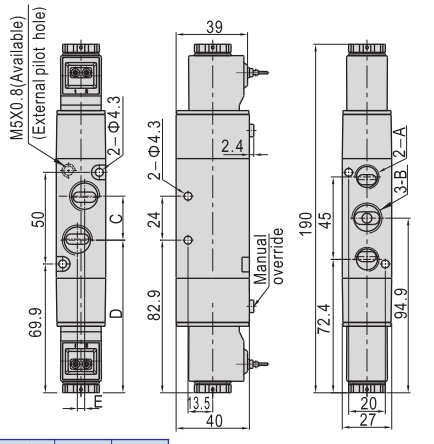

Model\Item	A	B	C	D	E
4V320-08	1/4"	1/4"	22	83.9	0
4V320-10	1/4"	3/8"	24	82.9	4

4V330(Terminal)

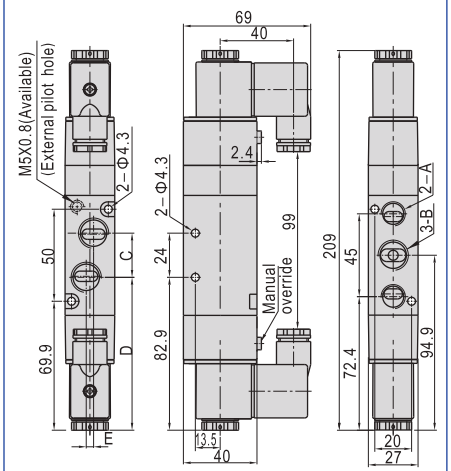

4V330(Grommet)

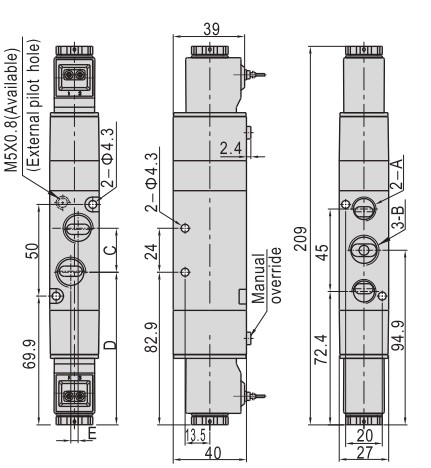

Model\Item	A	B	C	D	E
4V330-08	1/4"	1/4"	22	83.9	0
4V330-10	1/4"	3/8"	24	82.9	4

4V400

Specification

Model	4V410-15	4V420-15	4V430C-15	4V430E-15	4V430P-15
Fluid	Air(to be filtered by 40 μ m filter element)				
Acting	Internal pilot or external pilot				
Port size ①	In=Out=Exhaust=1/2"				
Orifice size	50.0mm²(Cv=2.79)		30.0mm²(Cv=1.68)		
Valve type	5 port 2 position		5 port 3 position		
Operating pressure	0.15~0.8MPa(21~114psi)				
Proof pressure	1.5MPa(215psi)				
Temperature ℃	-20~70				
Material of body	Aluminum alloy				
Lubrication ②	Not required				
Max. frequency ③	3 cycle/sec				
Weight	590g	7200g	770g		

① G thread and NPT thread are available.
② Once lubricated air is used, continue with same medium to optimise valve life span. Lubricants like ISO VG32 or equivalent are recommended.
③ The maximum actuation frequency is in the no-load state.

Symbol

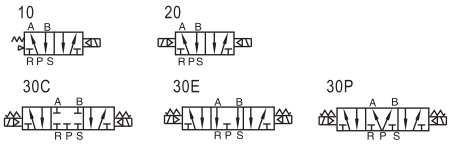

Coil specification

Item	Specitification
Standard voltage	AC220V, AC110V, AC24V, DC24V, DC12V
Scope of voltage	AC: ± 15% DC: ± 10%
Power consumption	AC:3.5VA DC:3.0W
Protection	IP65(DIN40050)
Temperature classification	B Class
Electrical entry	Termina, Grommet
Activating time	0.05 sec and below

Product feature

1. Pilot-oriented mode:Internal pilot or external pilot.
2. Structure in sliding column mode: good tightness and sensitive reaction.
3. Three position solenoid valves have three kinds of central function for your choice.
4. Double control solenoid valves have memory function.
5. Internal hole adopts special processing technology which has little attrition friction, low start pressure and long service life.
6. No need to add oil for lubrication.
7. It is available to form integrated valve group with the base to save installation space.
8. Affiliated manual devices are equipped to facilitate installation and debugging.
9. Several standard voltage grades are optional.

Ordering code

4V 4 10 15 A □ G –W

Model
4V: Solenoid valve(5/2, 5/3 way)

Code
4: 400 Series

Valve type
10: Single solenoid 5/2 way
20: Double solenoid 5/2 way
30C: Double solenoid 5/3 way closed center
30E: Double solenoid 5/3 way exhaust center
30P: Double solenoid 5/3 way pressure center

Port size
15: 1/2"

Voltage
A: AC220V
B: DC24V
C: AC110V
E: AC24V
F: DC12V

Thread type
G: G
T: NPT

Electrical entry
Blank: Terminal
I: Grommet

Pilot type
Blank: Internal pilot
Without M5 thread hole

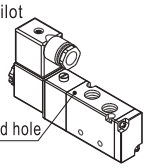

W: External pilot
With M5 thread hole

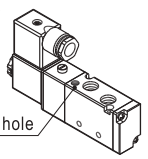

Please refer to 39 for manifold specification and the order way.

Flow chart

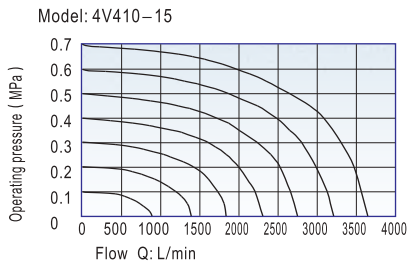

Inner structure

4V410

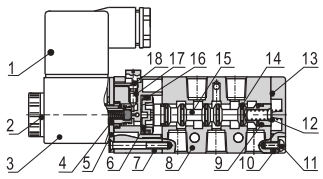

4V420

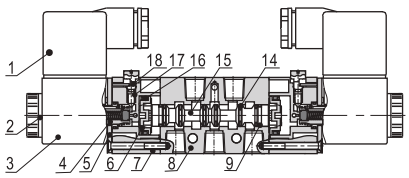

4V430C

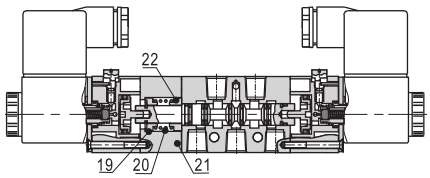

No.	Item	No.	Item	N0.	Item
1	Connector	9	Wear ring	17	Override spring
2	Coil net	10	Bottom cover	18	Manual override
3	Coil	11	Fixed screw	19	Spring holder
4	Armature	12	Spool spring	20	Return spring
5	Fixed plate	13	Bottom cover gasket	21	Side cover
6	Piston	14	Spool O-ring	22	Spring holder
7	Pilot kit	15	Spool		
8	Body	16	Piston O-ring		

Dimensions

4V410(Terminal)

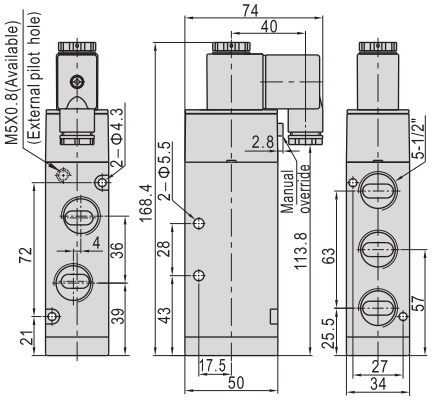

4V410(Grommet)

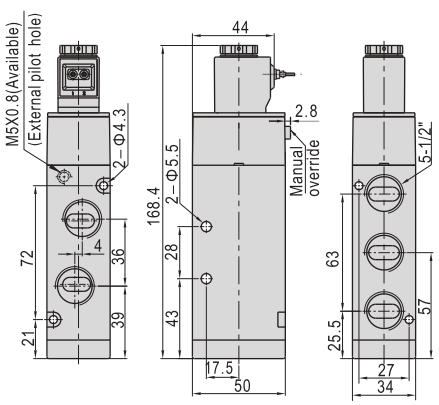

4V420(Terminal)

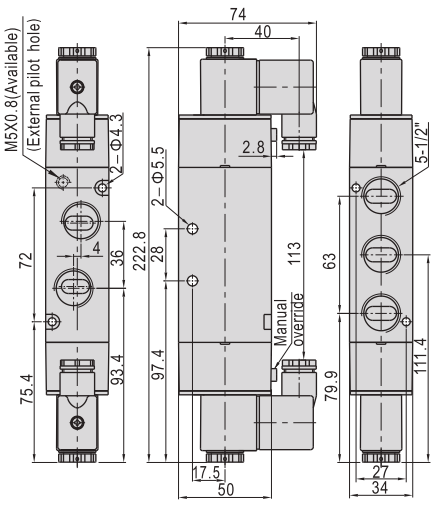

4V420(Grommet)

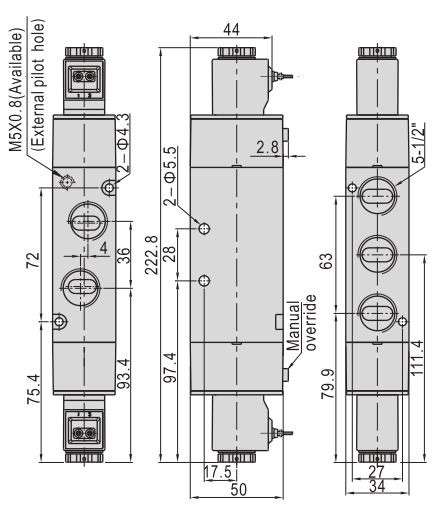

4V430(Terminal)

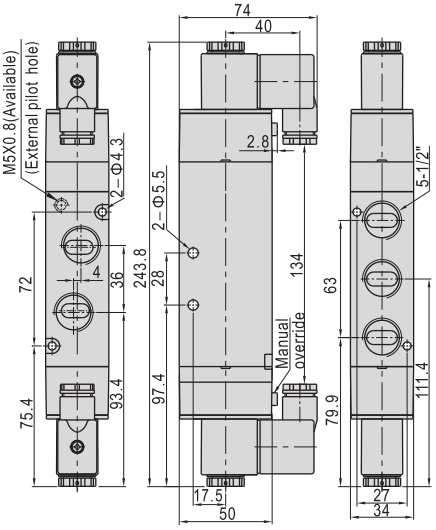

4V430(Grommet)

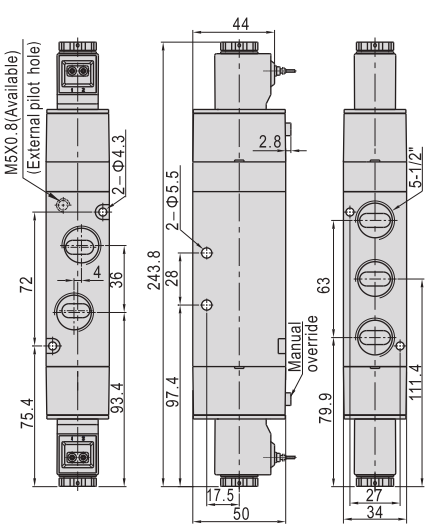

Symbol

Product feature

1. Internally piloted structure.
2. Structure in sliding column mode: good tightness and sensitive reaction.
3. Double control solenoid valves have memory function.
4. Internal hole adopts special processing technology which has little attrition friction, low start pressure and long service life.
5. No need to add oil for lubrication.
6. Install in the side plate with the surface upward, which can be used by directly connecting with the actuators.
7. Affiliated manual devices are equipped to facilitate installation and debugging.
8. Several standard voltage grades are optional.

Flow chart

Please refer to the same types of 4V series solenoid valves.

Specification

Model	4M110-M5 4M120-M5	4M110-06 4M120-06	4M210-06 4M220-06	4M210-08 4M220-08	4M310-08 4M320-08	4M310-10 4M320-10
Fluid	Air(to be filtered by 40 μ m filter element)					
Acting	Internal piloted					
Port size ①	In=Out=M5	In=Out =1/8"	In=Out =1/8"	In=Out =1/4"	In=Out =1/4"	In=Out =3/8"
Orifice size	5.5mm² (Cv=0.31)	12.0mm² (Cv=0.67)	14.0mm² (Cv=0.78)	16.0mm² (Cv=0.89)	25.0mm² (Cv=1.40)	30mm² (Cv=1.67)
Valve type	5 port 2 position					
Operating pressure	0.15~0.8MPa(21~114psi)					
Proof pressure	1.5MPa(215psi)					
Temperature ℃	-20~70					
Material of body	Aluminum alloy					
Lubrication ②	Not required					
Max. frequency ③	5 cycle/sec				4 cycle/sec	
Weight	4M110:120g 4M120:175g		4M210:220g 4M220:320g		4M310:310g 4M320:400g	

① G thread and NPT thread are available.
② Once lubricated air is used, continue with same medium to optimise valve life span. Lubricants like ISO VG32 or equivalent are recommended.
③ The maximum actuation frequency is in the no-load state.

Coil specification

Item	4M110 4M120	4M210 4M220 4M310 4M320
Standard voltage	AC220V, AC110V, AC24V, DC24V, DC12V	
Scope of voltage	AC: ± 15% DC: ± 10%	
Power consumption	AC:2.5VA DC:2.5W	AC:3.5VA DC:3.0W
Protection	IP65(DIN40050)	
Temperature classification	B Class	
Electrical entry	Terminal, Grommet	
Activating time	0.05 sec and below	

Ordering code

4M 3 10 10 A □ G

Model
4M: Solenoid valve (5/2 way NAMUR type)

Code
1: 100 Series
2: 200 Series
3: 300 Series

Valve type
10: Single solenoid
20: Double solenoid

Port size
M5: M5
06: 1/8"
08: 1/4"
10: 3/8"

Voltage
A: AC220V
B: DC24V
C: AC110V
E: AC24V
F: DC12V

Electrical entry
Blank: Terminal
I: Grommet

Thread type

Port size	Thread type
1/8",1/4",3/8"	G: G
	T: NPT
M5	Not this code

Inner structure

Single solenoid

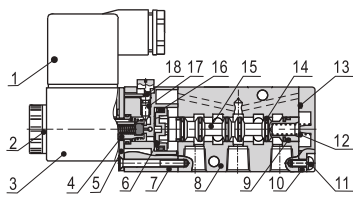

Double solenoid

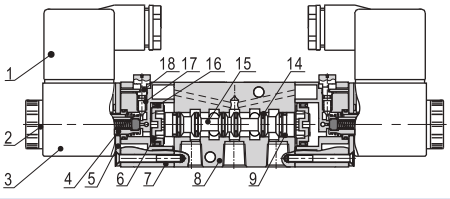

No.	Item	No.	Item
1	Connector	10	Bottom cover
2	Coil net	11	Fixed screw
3	Coil	12	Spool spring
4	Armature	13	Bottom cover gasket
5	Fixed plate	14	Spool O-ring
6	Piston	15	Spool
7	Pilot kit	16	Piston O-ring
8	Body	17	Override spring
9	Wear ring	18	Manual override

Dimensions

4M110(Terminal)

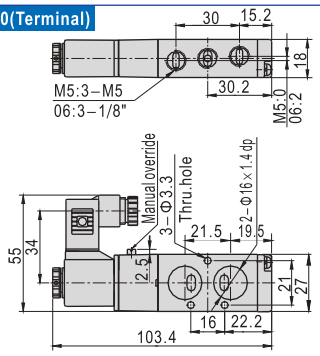

4M110(Grommet)

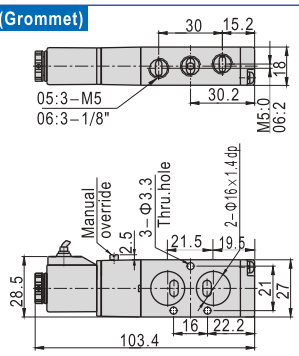

4M310(Terminal)

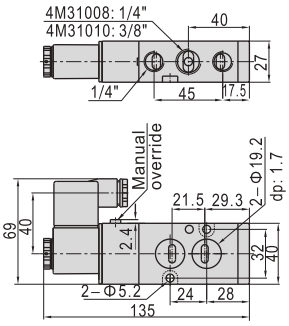

4M120(Terminal)

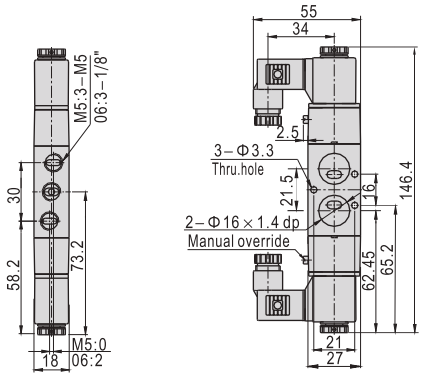

4M120(Grommet)

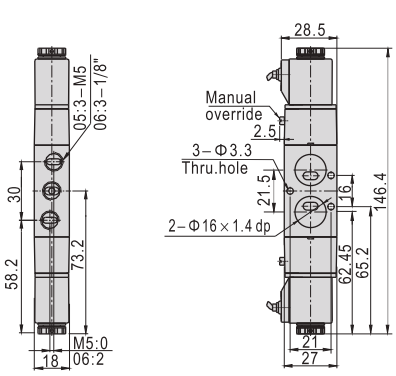

4M310(Grommet)

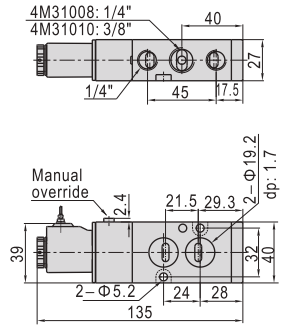

4M210(Terminal)

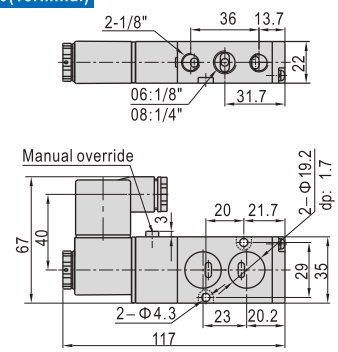

4M210(Grommet)

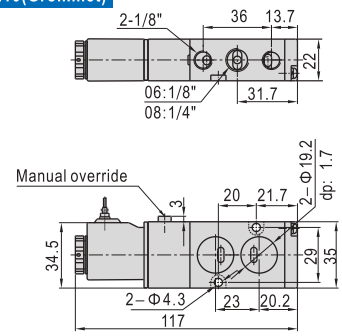

4M320(Terminal)

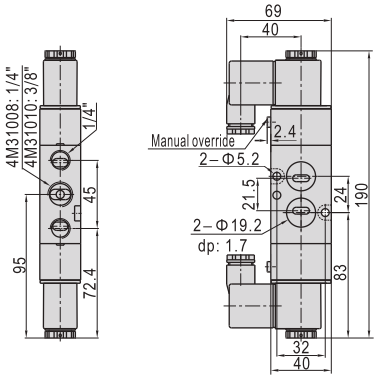

4M220(Terminal)

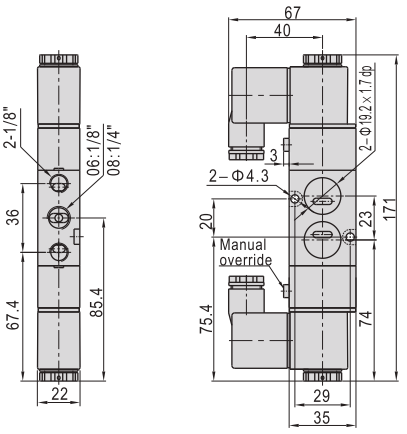

4M220(Grommet)

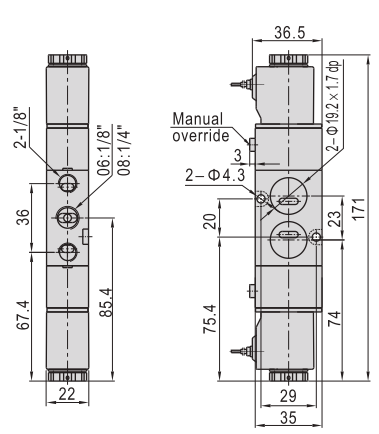

4M320(Grommet)

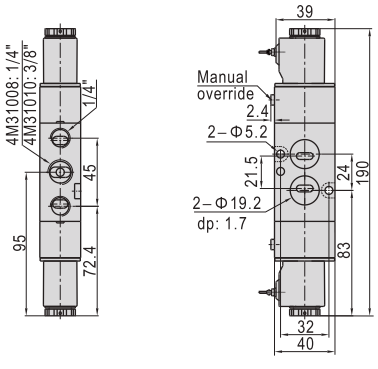

Manifold

Specification

Item\Manifold Model	100M	200M	300M
Fluid	Air(to be filtered by 40 μ m filter element)		
Temperature ℃	-20~70		
Adaptable valve's series	3V100 Series	3V200 Series	3V300 Series

Ordering code

Ordering code contains the two parts of the manifold' s and the blank plate' s.

1 Ordering code for manifold

3V100M 5F G

Model

3V100M: 100 Series manifold
3V200M: 200 Series manifold
3V300M: 300 Series manifold

Thread type

G: G
T: NPT

Number of stations

1F: 1 Station
2F: 2 Station
.....
16F: 16 Station

2 Ordering code for blank plate

P–3V100M R2

Model

3V100M: 100 Series manifold
3V200M: 200 Series manifold
3V300M: 300 Series manifold

Code

R2: Blank plate for manifold

Remark:1. Manifold kits contains manifold, seal and screw.
2. Blank plate kits contains blank plate and screw.

Product feature

1. It is available to integrate the direction control valves of the same series to form valve group to save space and cost.
2. It is easy to examine when there are faults owning to the unified air intake and exhaust and unified wiring.
3. Flexible combination and strong expansion capability can make any combination or expansion of the numbers of direction control valves that are connected.

Dimensions

With 3V solenoid valve

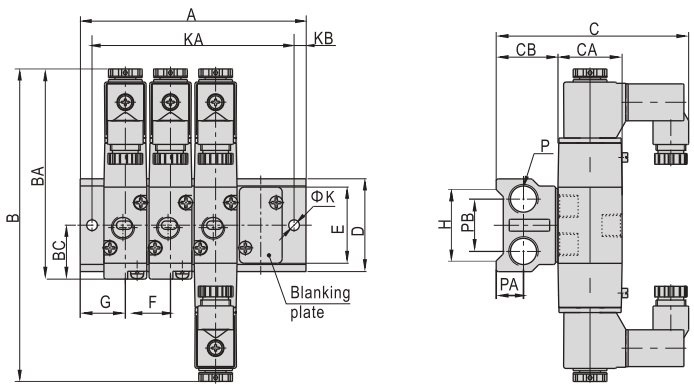

Model\Item	B	BA	BC	C	CA	CB	D	E	F	G	H	K	KB	P	PA	PB
3V100M	131.5	88.5	22.7	81	26	27	39	32	19	19	30	4.5	5	1/4"	11.5	22
3V200M	162.5	109	27.7	92.5	26	35	45	40	23	23	35	4.5	6	1/4"	11.5	25
3V300M	175	120	32.5	99	30	40	52	47	28	27	42	4.5	6	3/8"	13.5	28

Model\Item	A															
	1F	2F	3F	4F	5F	6F	7F	8F	9F	10F	11F	12F	13F	14F	15F	16F
3V100M	38	57	76	95	114	133	152	171	190	209	228	247	266	285	304	323
3V200M	46	69	92	115	138	161	184	207	230	253	276	299	322	345	368	391
3V300M	54	82	110	138	166	194	222	250	278	306	334	362	390	418	446	474

Model\Item	KA															
	1F	2F	3F	4F	5F	6F	7F	8F	9F	10F	11F	12F	13F	14F	15F	16F
3V100M	28	47	66	85	104	123	142	161	180	199	218	237	256	275	294	313
3V200M	34	57	80	103	126	149	172	195	218	241	264	287	310	333	356	379
3V300M	42	70	98	126	154	182	210	238	266	294	322	350	378	406	434	462

Specification

Item\Manifold Model	100M	200M	300M	400M
Fluid	Air(to be filtered by 40 μ m filter element)			
Temperature ℃	-20~70			
Adaptable valve's series	4V100 Series	4V200 Series	4V300 Series	4V400 Series

Ordering code

Ordering code contains the two parts of the manifold's and the blank plate's.

1 Ordering code for manifold

100M 5F G

Model
100M: 100 Series manifold
200M: 200 Series manifold
300M: 300 Series manifold
400M: 400 Series manifold

Thread type
G: G
T: NPT

① Number of stations

1F: 1 Station
2F: 2 Station
.....
16F: 16 Station

2 Ordering code for blank plate

P–100M R2

Model
100M: 100 Series manifold
200M: 200 Series manifold
300M: 300 Series manifold
400M: 400 Series manifold

Code
R2: Blank plate for manifold

① 100M, 200M series have a maximum of 16 stations ; 300M series have a maximum of 12 stations; 400M series have a maximum of 8 stations.

Product feature

1. It is available to integrate the direction control valves of the same series to form valve group to save space and cost.
2. It is easy to examine when there are faults owning to the unified air intake and exhaust and unified wiring.
3. Flexible combination and strong expansion capability can make any combination or expansi on of the numbers of direction control valves that are connected.

Dimensions

With 4V solenoid valve

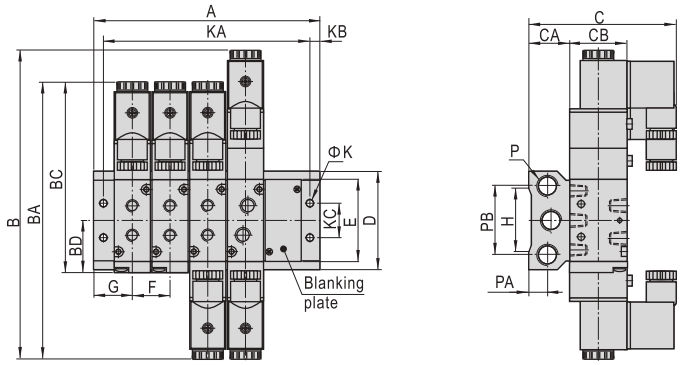

Model\Item	B	BA	BC	BD	C	CA	CB	D	E	F	G	H	K	KB	KC	P	PA	PB
100M□F	154.5	142.5	99.5	28	79	26	27	58	43	19	19	36	4.5	5	20	1/4"	12.5	40
200M□F	189	171	117	31.7	93	27	35	61	51	23	23	38	4.5	6	21	1/4"	13	43
300M□F	208	190	135	40	99.5	31	40	75	65	28	27	54	4.5	6	26	3/8"	15	53
400M□F	243	223	168.5	57	112.5	39	50	104	94.5	35	31.5	75	5.5	7	32	1/2"	19	68

Model\Item	A															
	1F	2F	3F	4F	5F	6F	7F	8F	9F	10F	11F	12F	13F	14F	15F	16F
100M□F	38	57	76	95	114	133	152	171	190	209	228	247	266	285	304	323
200M□F	46	69	92	115	138	161	184	207	230	253	276	299	322	345	368	391
300M□F	54	82	110	138	166	194	222	250	278	306	334	362	-	-	-	-
400M□F	63	98	133	168	203	238	273	308	-	-	-	-	-	-	-	-

Model\Item	KA															
	1F	2F	3F	4F	5F	6F	7F	8F	9F	10F	11F	12F	13F	14F	15F	16F
100M□F	28	47	66	85	104	123	142	161	180	199	218	237	256	275	294	313
200M□F	34	57	80	103	126	149	172	195	218	241	264	287	310	333	356	379
300M□F	42	70	98	126	154	182	210	238	266	294	322	350	-	-	-	-
400M□F	49	84	119	154	189	224	259	294	-	-	-	-	-	-	-	-

ISO Standard solenoid valve(5/2 way, 5/3 way)

ESV200, 300, 400, 600 Series

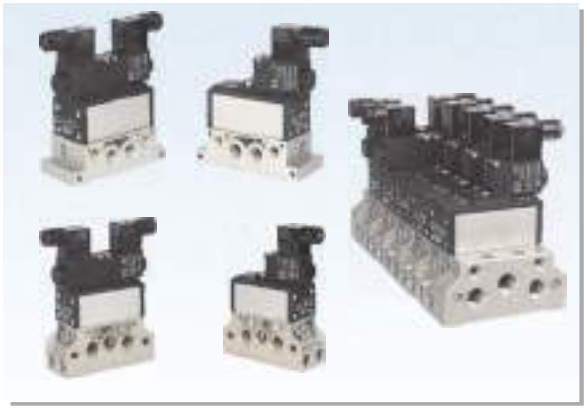

Specification

Model		200Series	300 Series	400 Series	600 Series
Orifice size(Cv) mm²		32(Cv=1.8)	42(Cv=2.32)	69(Cv=3.85)	108(Cv=6.0)
Fluid		Air(to be filtered by 40 μ m filter element			
Acting		Internal pilot or external pilot			
Lubrication ①		Not required			
Operating Pressure	Internal pilot	0.2~1.0Mpa(29~145psi)			
	External pilot	0~1.0Mpa(0~145psi)			
Control pressure(External pilot)		0.2~1.0Mpa(29~145psi)			
Proof pressure		1.5Mpa(215psi)			
Temperature		-20~70 ℃			
Port size(manifold) ②		1/4"	3/8"	1/2"	3/4"
Port size(end plate)		3/8"	1/2"	3/4"	1"
Voltage range		AC:±15% DC:±10%			
Power consumption		AC:3.5VA DC:3.0W			
Activating time (0.5MPa)Open\close	10\20 Series	33\41ms	42\55ms	50\68ms	55\85ms
	30 C\E\P Series	38\50ms	52\62ms	52\68ms	55\85ms
Insulation		Class B			
Protection		IP65			
Installation size		ISO5599-1 standard			

① Note: Once lubricated air is used, continue with same medium to optimise valve life span. Lubricants like ISO VG32 or equivalent are recommended.

② Note: G thread is available.

Symbol

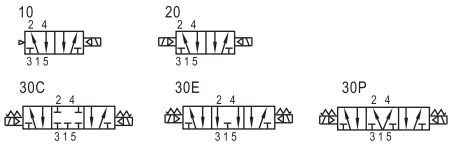

Product feature

1. Succinct appearance and compact conformation.
2. The installation size conforms to ISO 5599/1 standard.
3. Because of the special seals, the feature are large flow rate and long lifetime.
4. For 200\300\400 series you can adjust the installation direction of the gasket to change the acting type: internal pilot, external pilot, or air control.
5. You need install the valve together with the sub-base. There are individual and parallel type for manifold sub-base.
6. There are various connection and installation method for manifold. It is easy to use.
7. The manifold of 200\300\400 series have the function of exhaust throttling, so no need to connect another throttle valve.

Ordering code of valve

ESV 2 10 A □ □

Model
ESV: ISO standard solenoid valve

Code
2: 200 Series
3: 300 Series
4: 400 Series
6: 600 Series

Valve type
10: Single solenoid 5/2 way

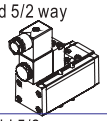

20: Double solenoid 5/2 way

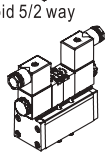

30C: Double solenoid 5/2 way closed center
30E: Double solenoid 5/2 way exhaust center
30P: Double solenoid 5/2 way pressure center

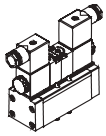

Pilot type ①
Blank: Internal pilot
W: External pilot

Electrial entry
Blank: Terminal
I: Grommet

Voltage
A: AC220V
B: DC24V
C: AC110V
E: AC24V
F: DC12V

① Note: Internal pilot can be changed to external pilot mode(except 600 series), please adjust the installation method of the gasket refering to article 1 o 2 in the installation manual.

Ordering code of manifold

ESV 20 1M G □ □

Model
ESV: ISO standard solenoid valve

Code
2: 200 Series
3: 300 Series
4: 400 Series
6: 600 Series

Manifold type

1M: Individual sub-base

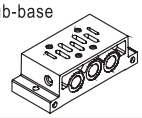

2M: Manifold sub-base

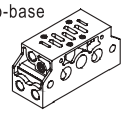

3M: End plate kit

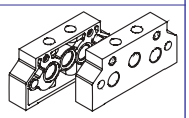

4M: Side port block

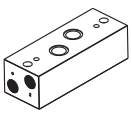

Port position type

1M	Blank: Side port
	B: Bottom port
2M	Blank: Left side port
	R: Right side port
	B: Bottom port
4M	Blank: Left side port
	R: Right side port

External pilot port type

1M	Blank: Individual pilot port
2M	Blank: Individual pilot port
	W: Centralized pilot port

Thread type
G: G

Note: 1. For the same model, the port size of the end-plate is bigger than the sub-base (For example ESV202M, the port size of sub-base is 1/4", and the port size of end plate is 3/8").
2. Only individual pilot port is available for individual sub-base.
3. The manifold sub-base must be used with end plate kit, individual pilot port and centralized pilot port can be mixed.
4. 600 series individual sub-base only has side port, 600 series manifold sub-base only has individual pilot port and bottom port.
5. Only 600 series have side port block.

Ordering code of accessories

P-ESV200M R2

Accessories code
P: Unit accessories

Code
ESV200M: 200 Series manifold
ESV300M: 300 Series manifold
ESV400M: 400 Series manifold
ESV600M: 600 Series manifold

Accessories type
R2: Blank plate for manifold

Installation and operation(For 200, 300, 400 series)

1. The classification and selection for the pilot type of valve

1.1. According to the source of pilot air, we can divide the valve into two types: the internal pilot and external pilot. The standard type is internal pilot.

1.2. You can convert from internal pilot to external pilot by the following methods.

1	2	3
Remove the 4 philips head screws, and then remove the coil, pilot body and cover.	Assemble the gasket according to the picture, and then assemble the cover, pilot body and coil- Internal pilot	Assemble the pilot O-ring according to the picture, and then, assemble the cover, pilot body and coil-External pilot.
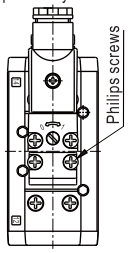	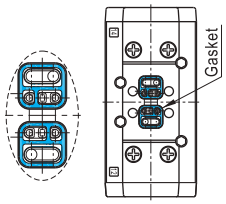	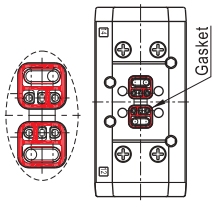

2. The classification and selection for the parallel manifold sub-base

2.1. According to the direction of pilot air supply, we can divide the manifold sub-base into two types: the individual pilot and centralized pilot.

2.2. If you select the individual pilot, the fitting must be connected to the individual pilot ports.
If you select the centralized pilot type, the fitting must be connected to the centralized pilot ports.

2.3. If you use parallel manifold, all of the manifold must be used the same pilot type: such as, all of them are the individual pilot type, or all of them are the centralized pilot type.

* Note: Only when you use the external pilot type, you can select the individual pilot or centralized pilot. When you use the internal pilot type, the pilot ports on the manifold are ineffective.

3. The position and specification of the manifold sub-base ports

The diagram of manifold sub-base

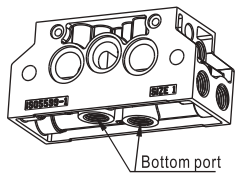

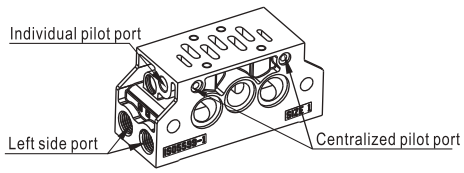

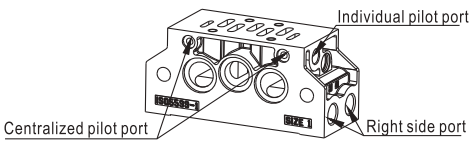

Port status of manifold sub-base

Port working condition / Port name / Ordering code	Left side port	Right side port	Bottom port	Centralized pilot port	Individual pilot port
ESV202MG	Use	Unused	Unused	Unused	Use
ESV202MGR	Unused	Use	Unused	Unused	Use
ESV202MGB	Unused	Unused	Use	Unused	Use
ESV202MGW	Use	Unused	Unused	Use	Unused
ESV202MGWR	Unused	Use	Unused	Use	Unused
ESV202MGWB	Unused	Unused	Use	Use	Unused

Note: Please seal the bottom port by plug, when it is unused.
The above list is an example of 200M series' ordering code, the other series is follow the same pattern, only need to change the series code.

4. Exhaust throttle function

4.1. The manifold has exhaust throttle function, the below picture shows the position of the exhaust throttle orifices on each side.

4.2. Use allen key to adjust the screw.

4.3. Rotate the screw clockwise to reduce the exhaust orifice, rotate the screw counter-clockwise to enlarge the exhaust orifice.

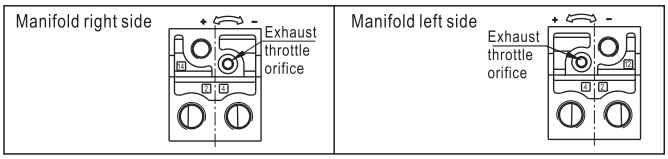

Flow chart

Model: ESV210

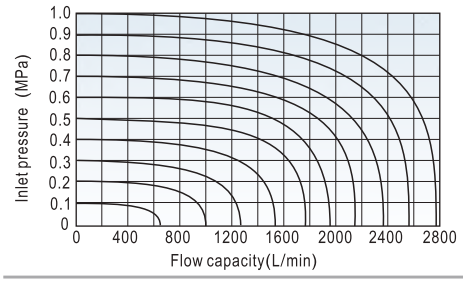

Model: ESV310

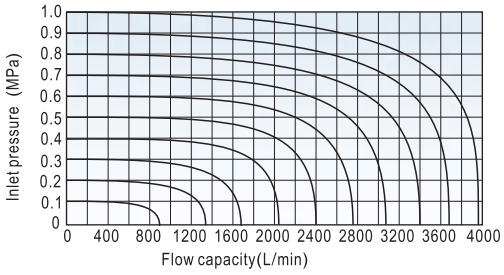

Model: ESV410

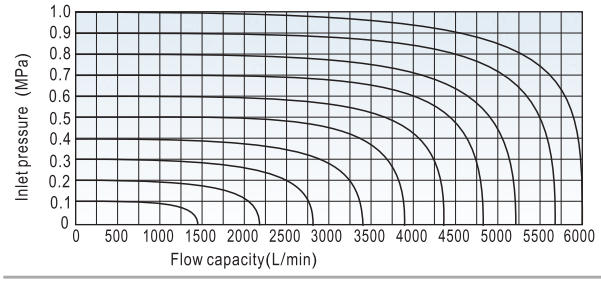

Model: ESV610

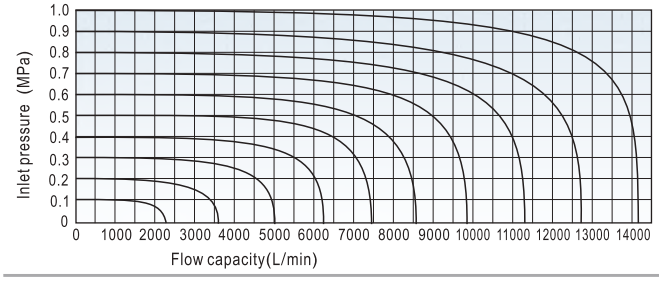

Inner structure

ESV210 (Terminal)

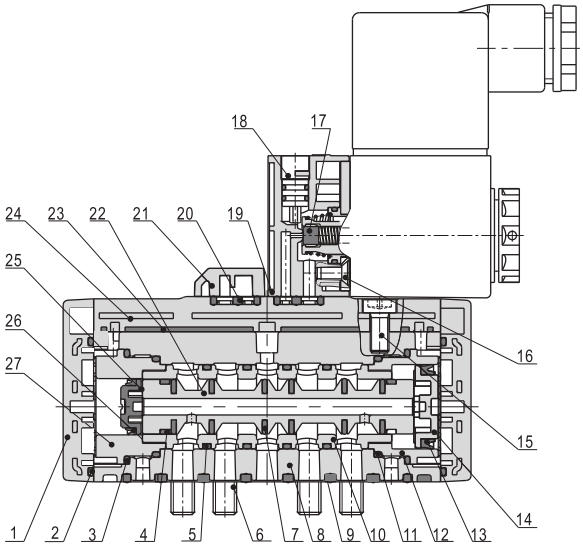

NO.	Item	NO.	Item	NO.	Item
1	Bottom cover	10	Spacer	19	Pilot kit
2	O-ring	11	O-ring	20	Gasket
3	O-ring	12	Big piston sheath	21	Cover plate
4	Wear ring	13	Big piston O-ring	22	Spool
5	O-ring	14	Big piston	23	Upper cover gasket
6	Screw	15	Screw	24	Upper cover
7	O-ring	16	Screw	25	Small piston
8	Body	17	Gasket	26	Small piston O-ring
9	Gasket	18	Manual override	27	Small piston sheath

Dimensions(ESV200 Series)

ESV210 (Terminal)

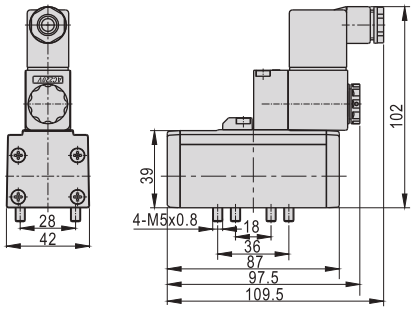

ESV210 (Grommet)

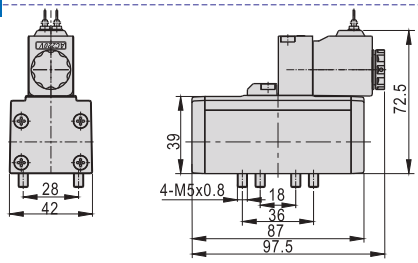

ESV220 (Terminal)

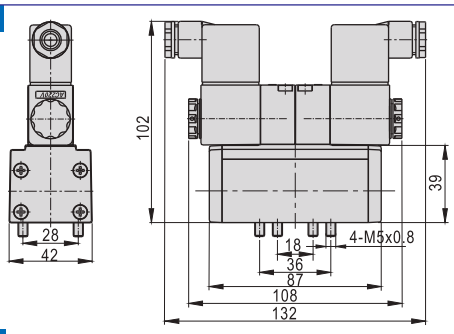

ESV220 (Grommet)

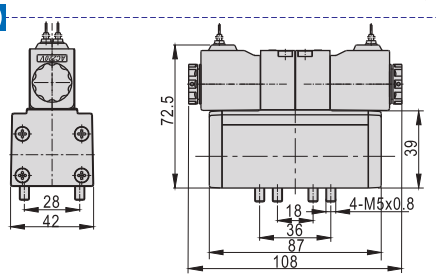

ESV230C(E\P) (Terminal)

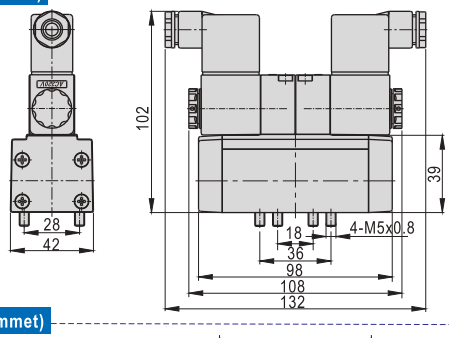

ESV230C(E\P) (Grommet)

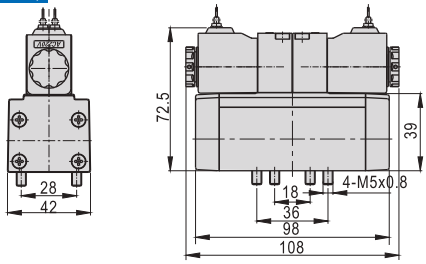

ESV201M

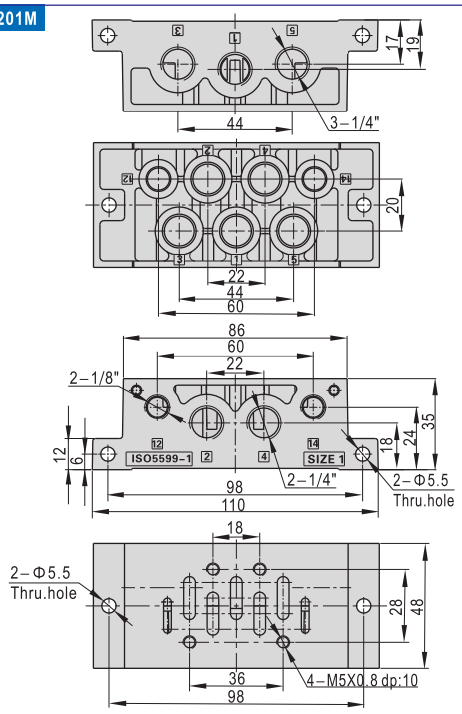

ESV202M

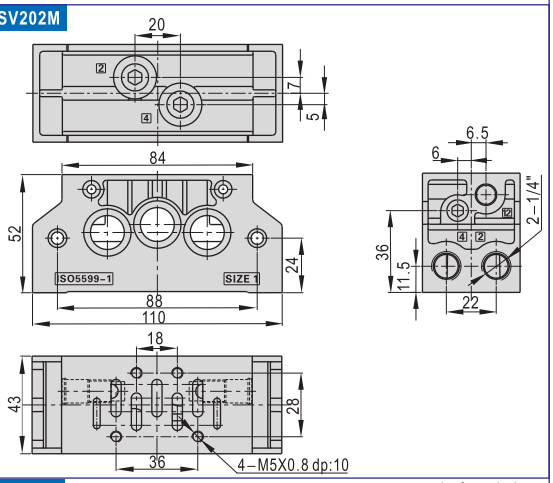

ESV203M

Left end plate

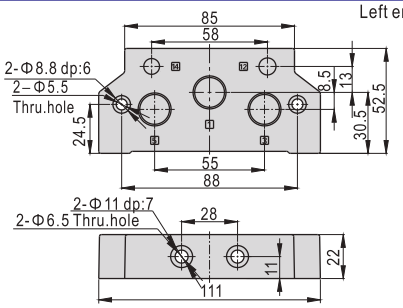

Right end plate

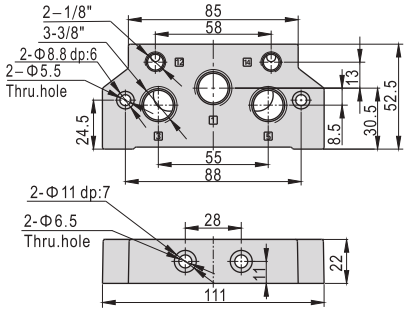

ESV210+ESV201M

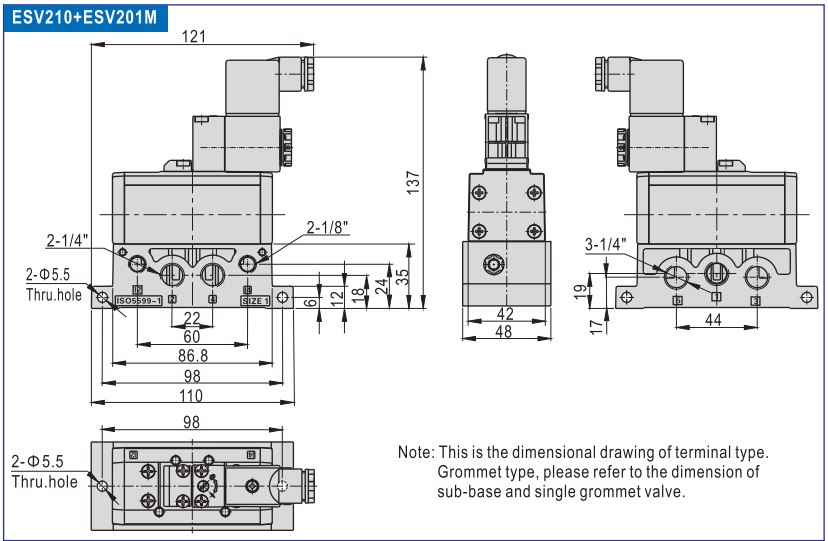

Note: This is the dimensional drawing of terminal type. Grommet type, please refer to the dimension of sub-base and single grommet valve.

ESV220+ESV201M

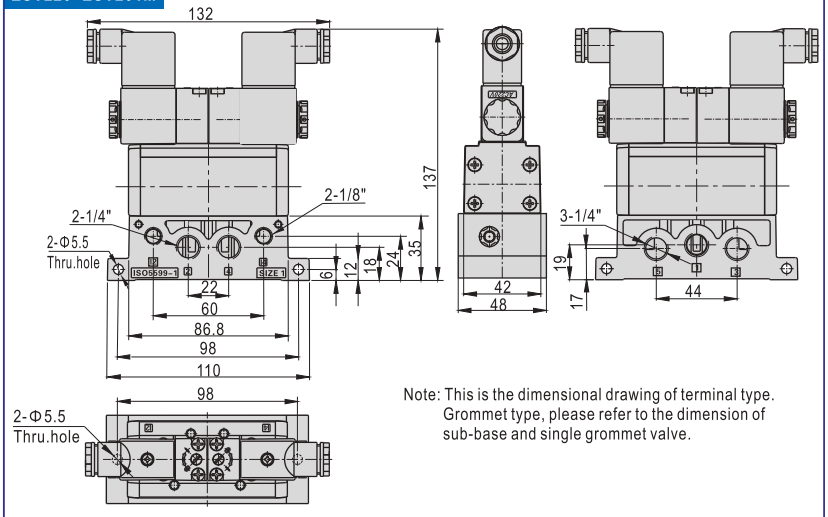

Note: This is the dimensional drawing of terminal type. Grommet type, please refer to the dimension of sub-base and single grommet valve.

ESV230+ESV201M

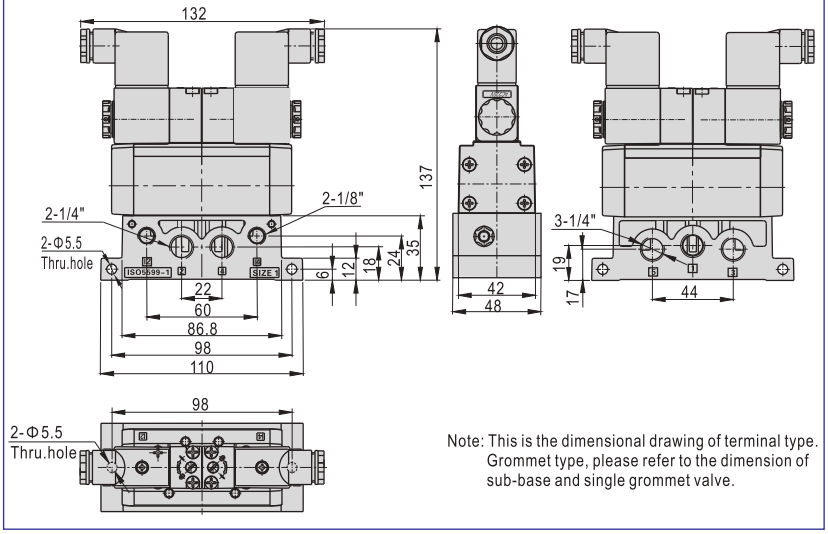

Note: This is the dimensional drawing of terminal type. Grommet type, please refer to the dimension of sub-base and single grommet valve.

ESV210+ESV202M+ESV203M

Note: n means the number of stations. The dimension of the grommet type(more than 3 stations), please refer to this drawing and the single grommet valve drawing.

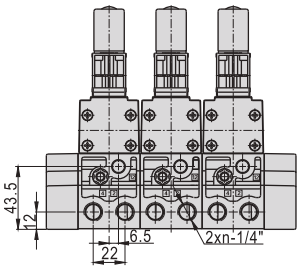

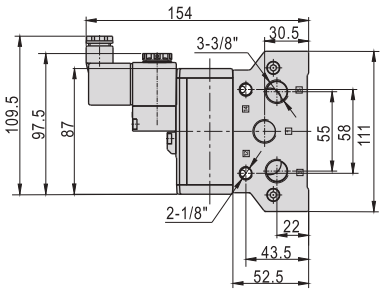

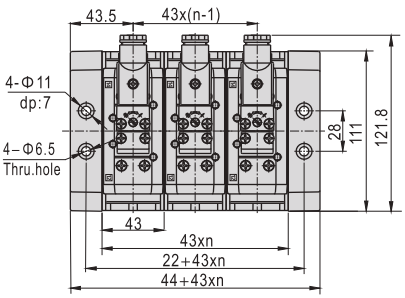

ESV220+ESV202M+ESV203M

Note: n means the number of stations. The dimension of the grommet type(more than 3 stations), please refer to this drawing and the single grommet valve drawing.

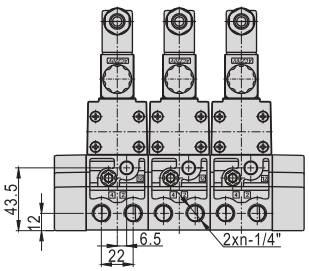

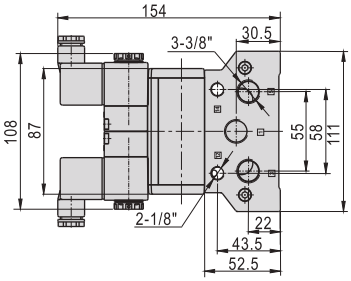

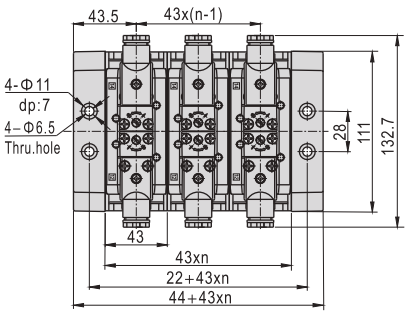

ESV230+ESV202M+ESV203M

Note: n means the number of stations. The dimension of the grommet type(more than 3 stations), please refer to this drawing and the single grommet valve drawing.

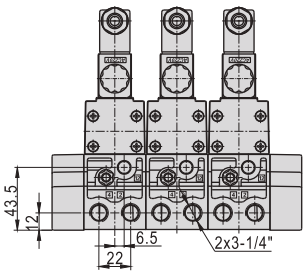

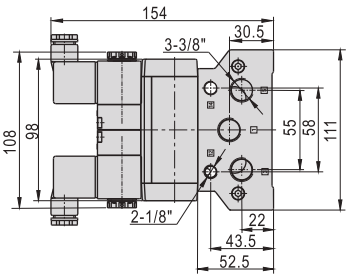

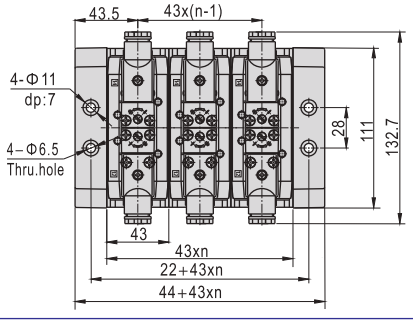

Dimensions(ESV300 Series)

ESV310 (Terminal)

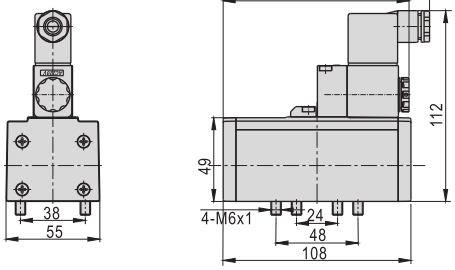

ESV310 (Grommet)

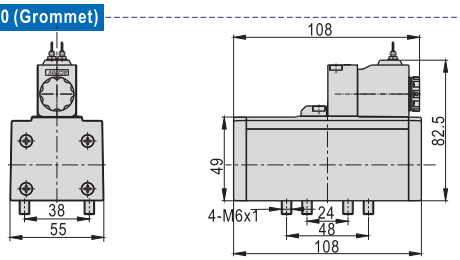

ESV320 (Terminal)

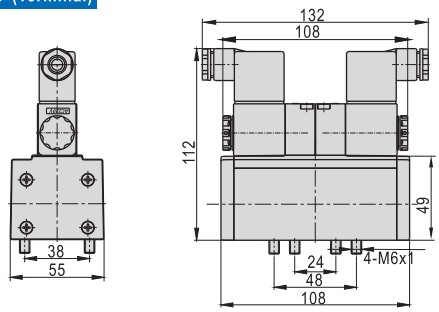

ESV320 (Grommet)

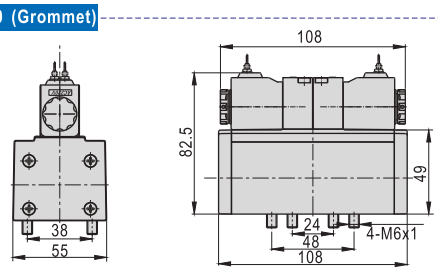

ESV330C(E\P) (Terminal)

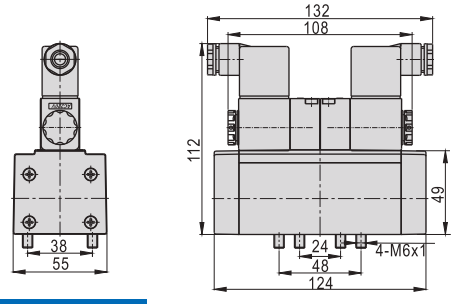

ESV330C(E\P) (Grommet)

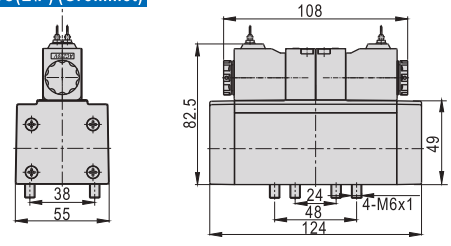

ESV301M

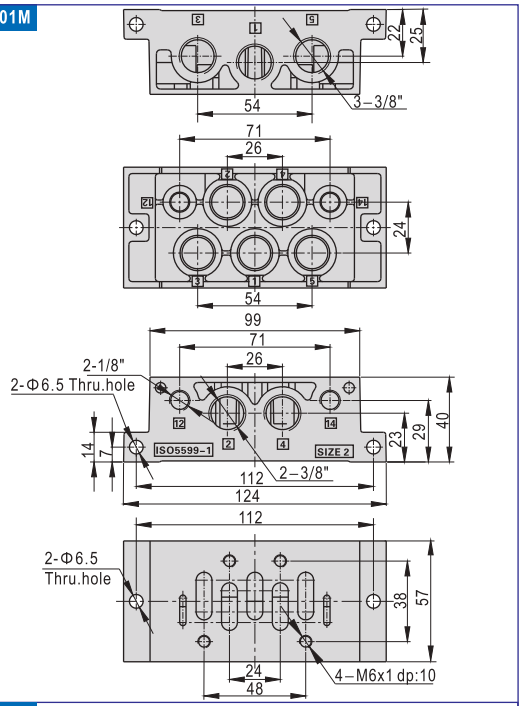

ESV302M

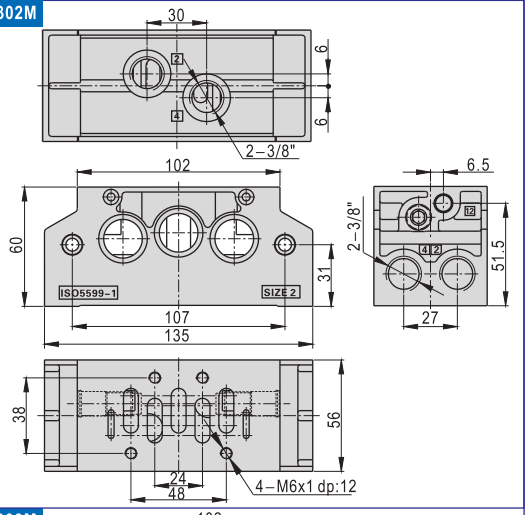

ESV303M

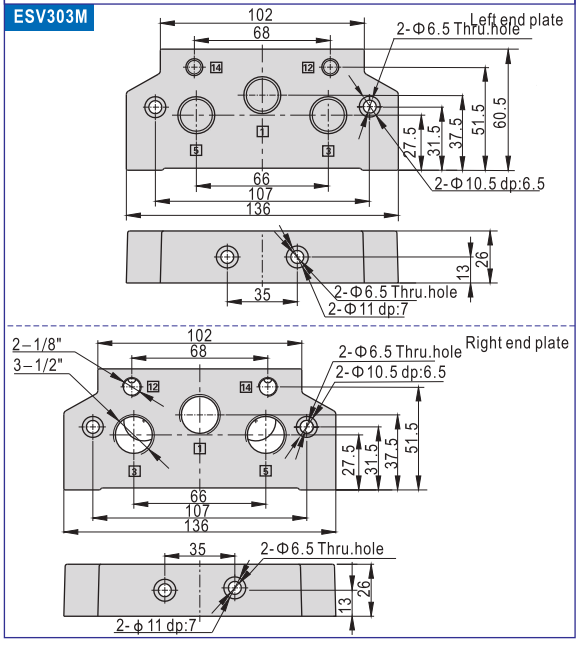

ESV310+ESV301M

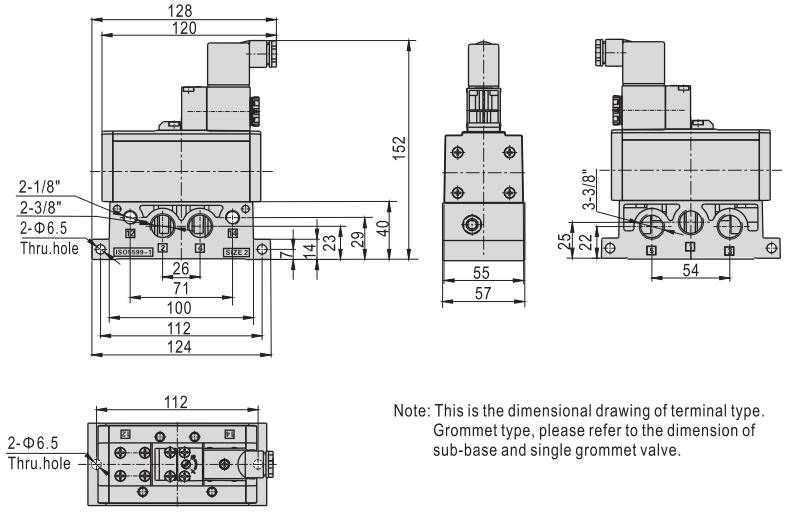

Note: This is the dimensional drawing of terminal type. Grommet type, please refer to the dimension of sub-base and single grommet valve.

ESV320+ESV301M

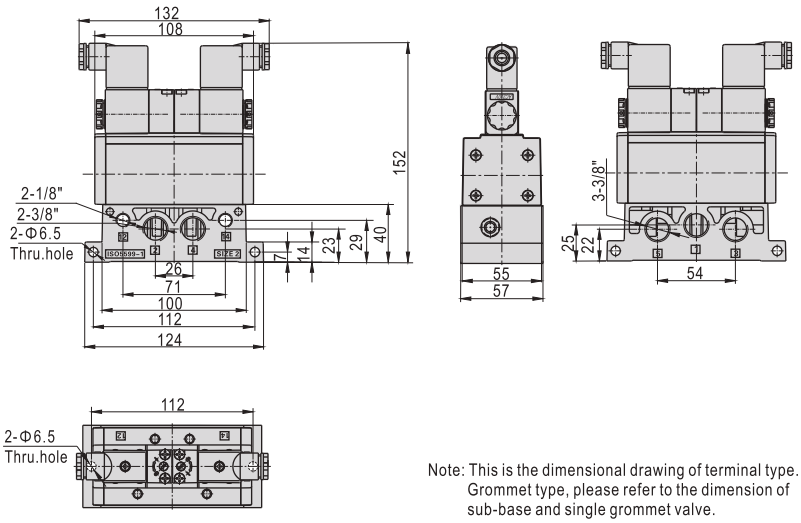

Note: This is the dimensional drawing of terminal type. Grommet type, please refer to the dimension of sub-base and single grommet valve.

ESV330+ESV301M

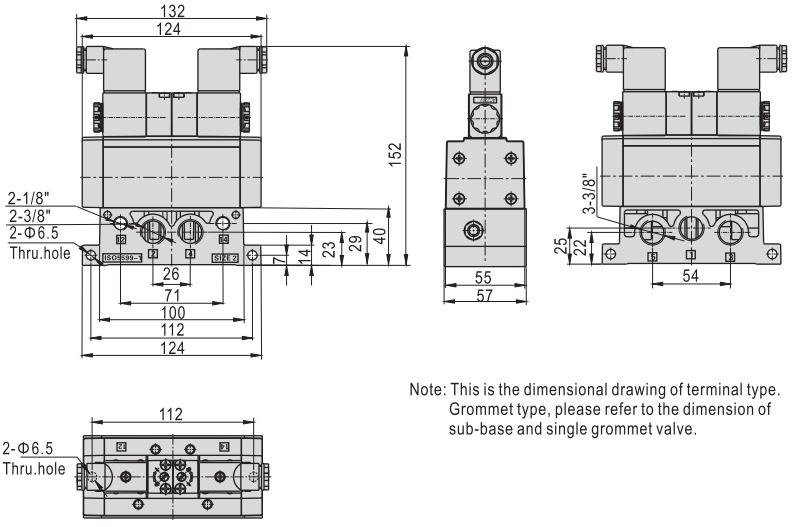

Note: This is the dimensional drawing of terminal type. Grommet type, please refer to the dimension of sub-base and single grommet valve.

ESV

ESV310+ESV302M+ESV303M

Note: n means the number of stations. The dimension of the grommet type(more than 3 stations), please refer to this drawing and the single grommet valve drawing.

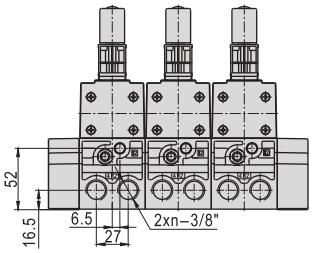

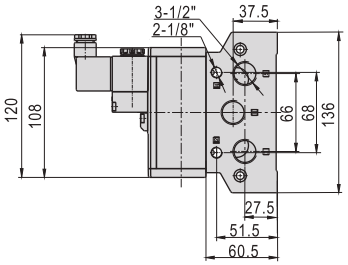

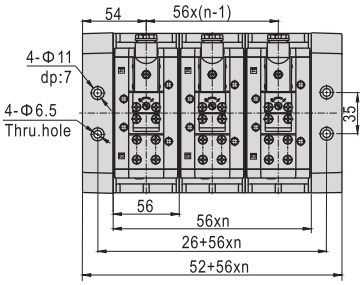

ESV320+ESV302M+ESV303M

Note: n means the number of stations. The dimension of the grommet type(more than 3 stations), please refer to this drawing and the single grommet valve drawing.

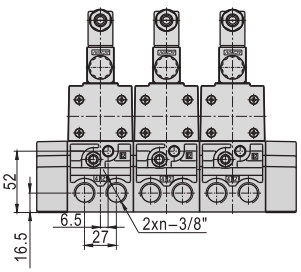

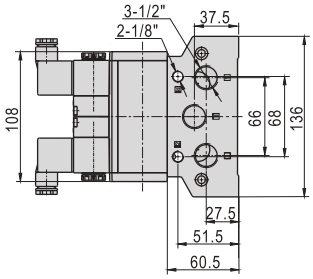

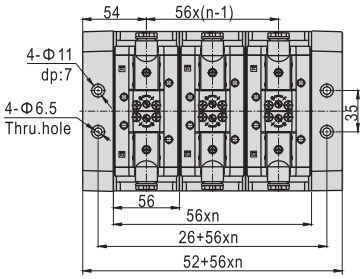

ESV330+ESV302M+ESV303M

Note: n means the number of stations. The dimension of the grommet type(more than 3 stations), please refer to this drawing and the single grommet valve drawing.

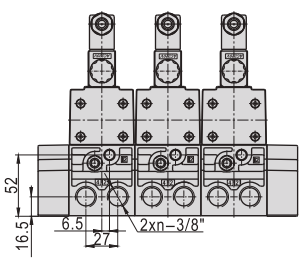

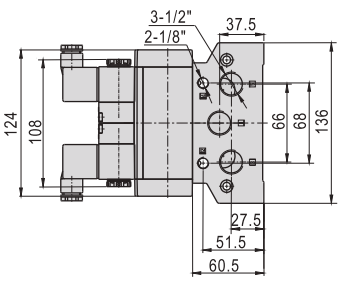

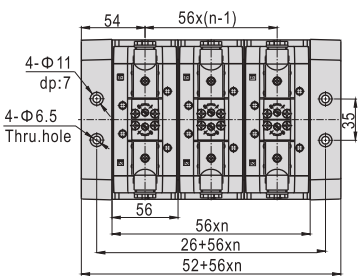

Dimensions(ESV400 Series)

ESV410 (Terminal)

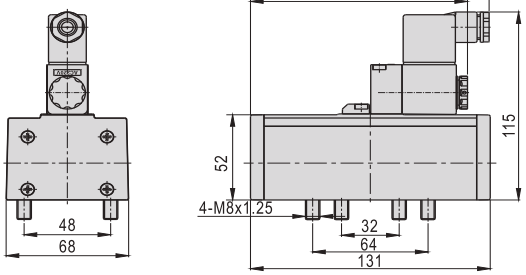

ESV410 (Grommet)

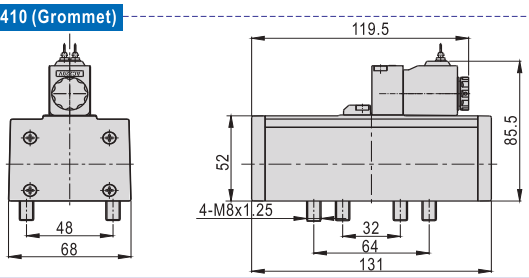

ESV420 (Terminal)

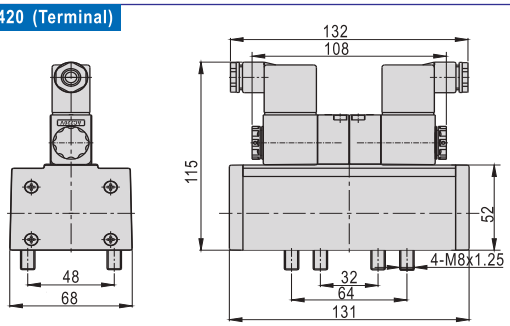

ESV420 (Grommet)

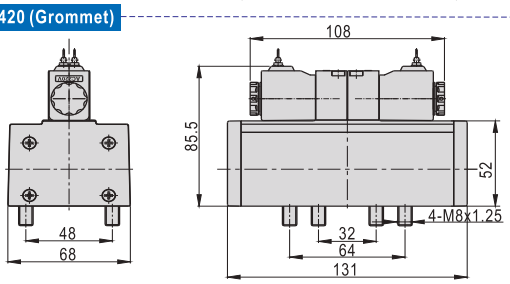

ESV430C(E\P) (Terminal)

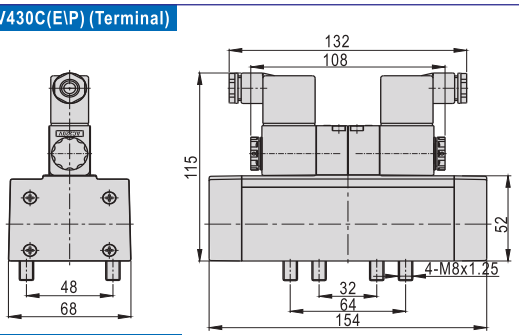

ESV430C(E\P) (Grommet)

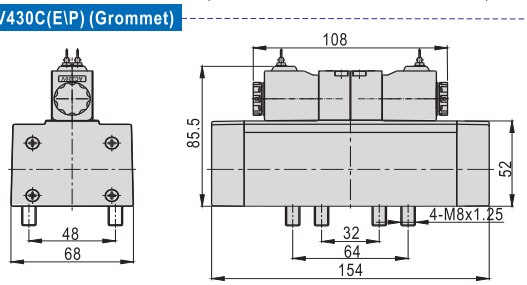

ESV401M

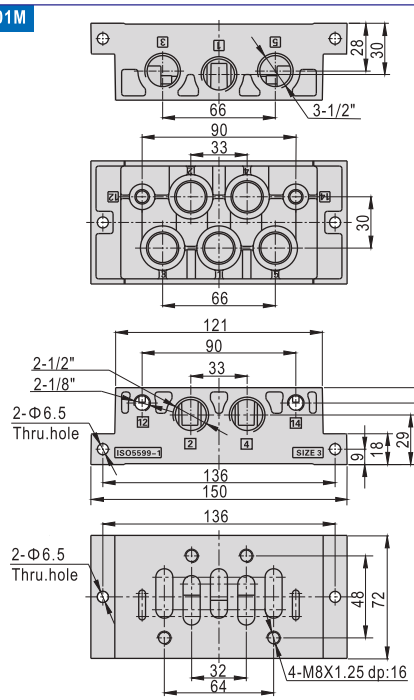

ESV402M

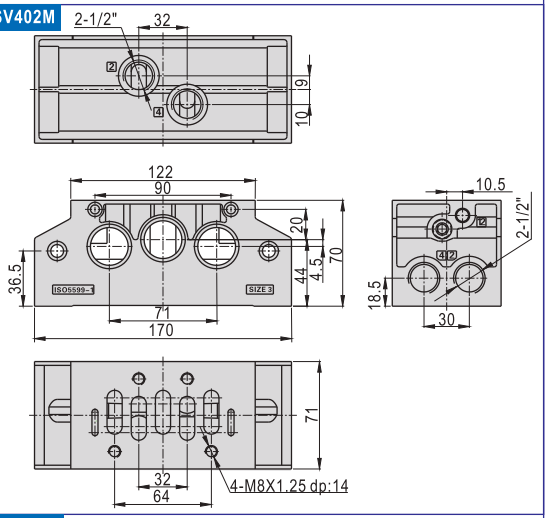

ESV403M

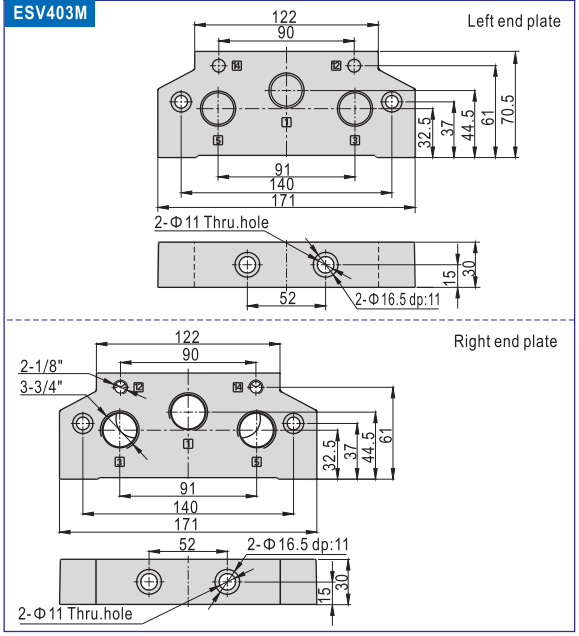

ESV410+ESV401M

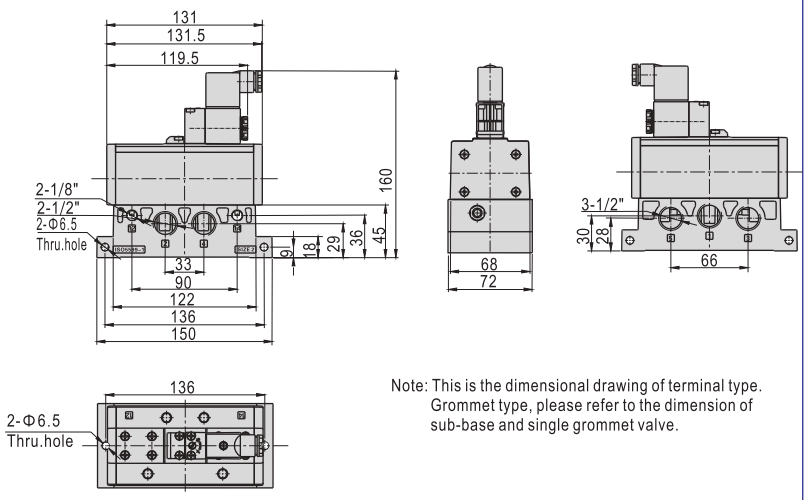

Note: This is the dimensional drawing of terminal type. Grommet type, please refer to the dimension of sub-base and single grommet valve.

ESV420+ESV401M

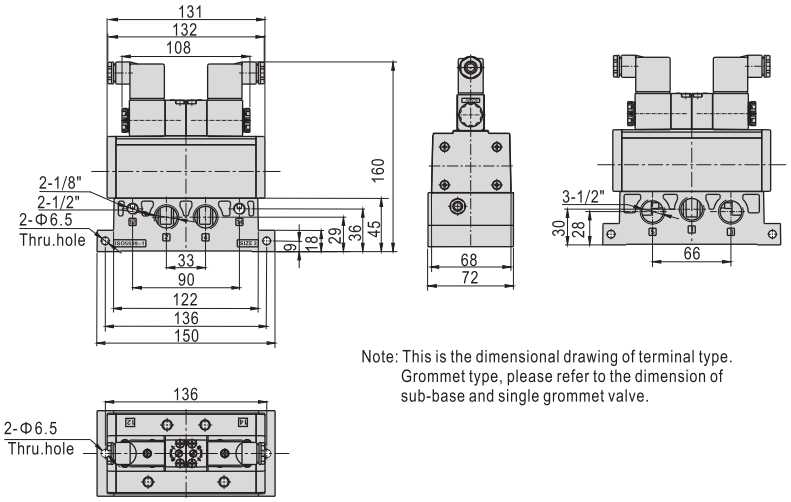

Note: This is the dimensional drawing of terminal type. Grommet type, please refer to the dimension of sub-base and single grommet valve.

ESV430+ESV401M

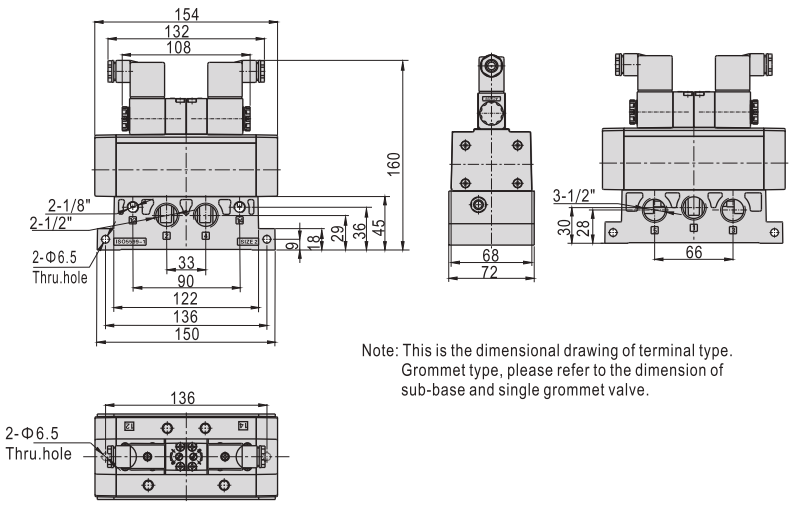

Note: This is the dimensional drawing of terminal type. Grommet type, please refer to the dimension of sub-base and single grommet valve.

ESV

ESV410+ESV402M+ESV403M

Note: n means the number of stations. The dimension of the grommet type(more than 3 stations), please refer to this drawing and the single grommet valve drawing.

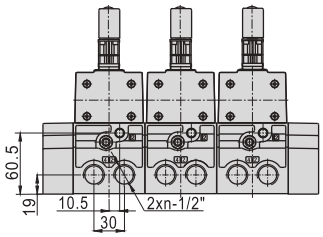

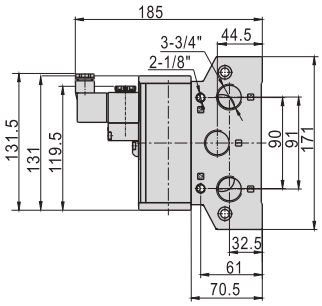

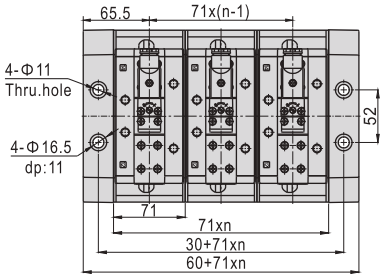

ESV420+ESV402M+ESV403M

Note: n means the number of stations. The dimension of the grommet type(more than 3 stations), please refer to this drawing and the single grommet valve drawing.

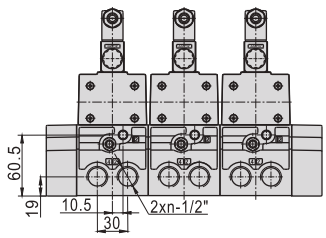

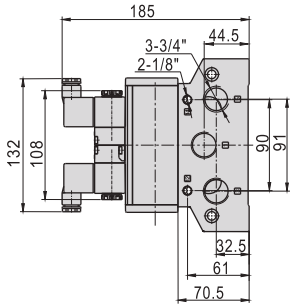

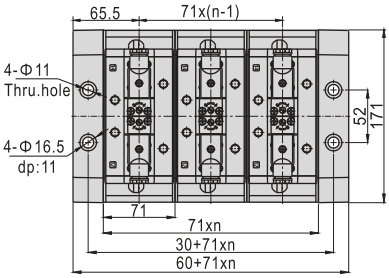

ESV430+ESV402M+ESV403M

Note: n means the number of stations. The dimension of the grommet type(more than 3 stations), please refer to this drawing and the single grommet valve drawing.

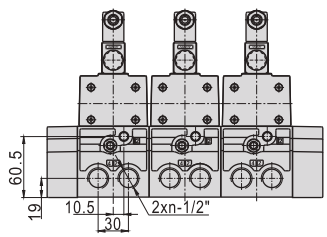

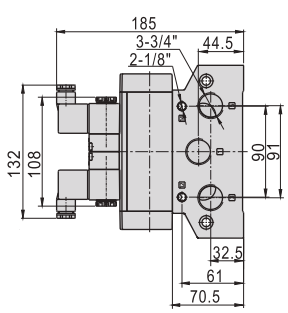

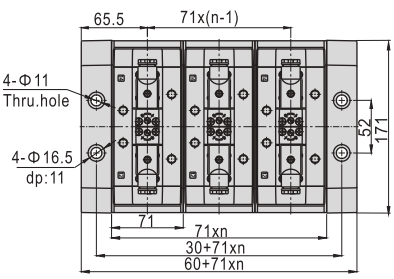

Dimensions(ESV600 Series)

ESV610 (Terminal)

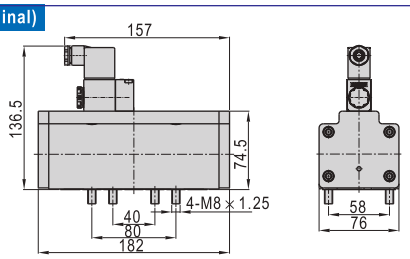

ESV610 (Grommet)

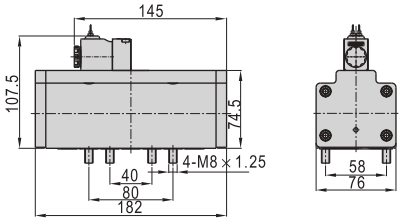

ESV620/630 (Terminal)

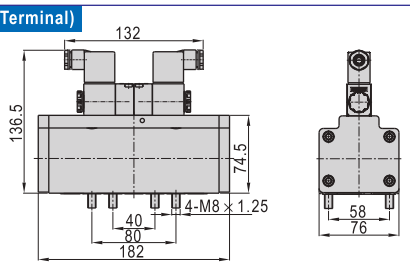

ESV620/630 (Grommet)

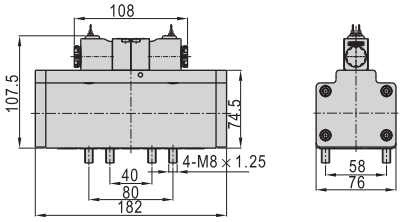

ESV601M

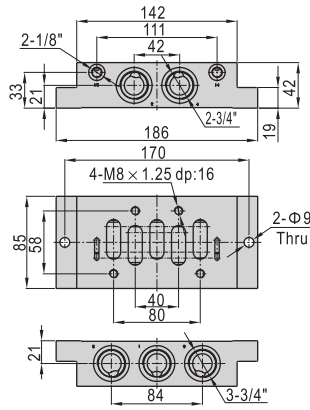

ESV602M

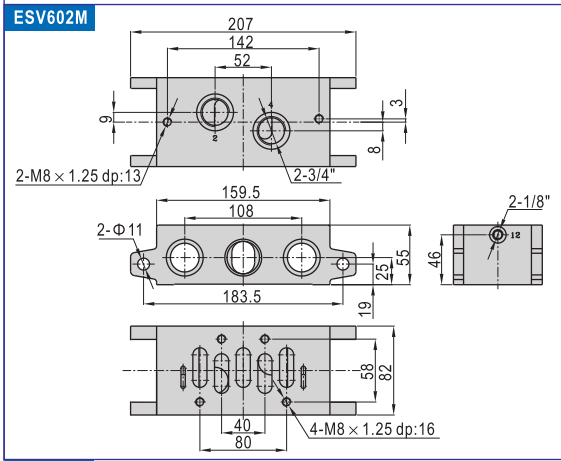

ESV603M

Left end plate

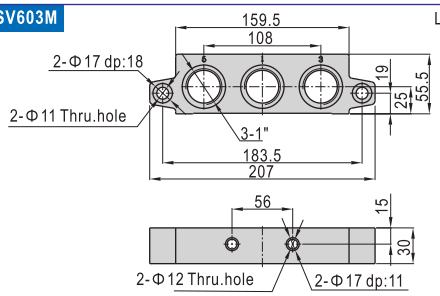

Right end plate

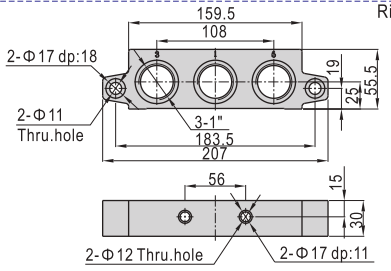

ESV604M

Left port

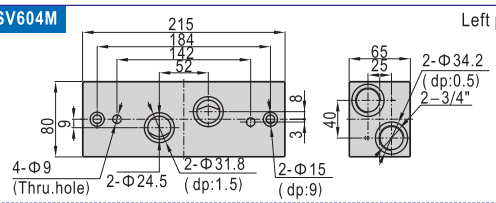

Right port

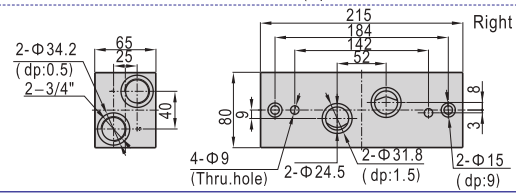

ESV610+ESV601M

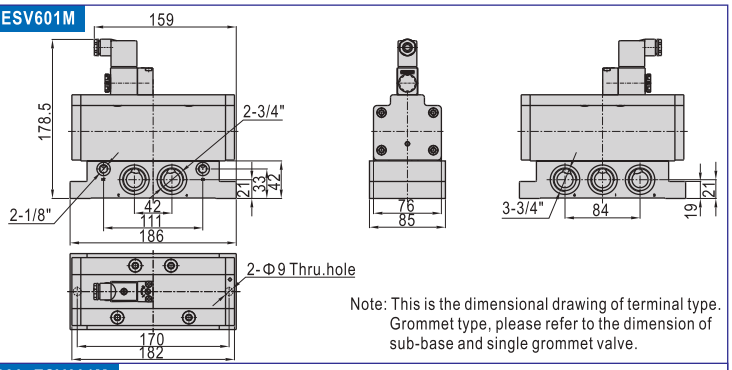

Note: This is the dimensional drawing of terminal type. Grommet type, please refer to the dimension of sub-base and single grommet valve.

ESV620/630+ESV601M

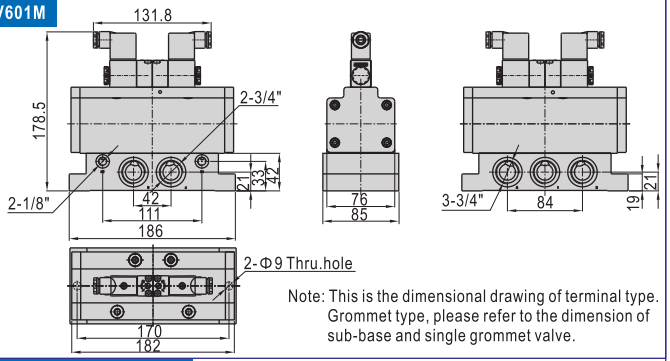

Note: This is the dimensional drawing of terminal type. Grommet type, please refer to the dimension of sub-base and single grommet valve.

ESV610+ESV602M+ESV603M+ESV604M

Note: This is the dimensional drawing of terminal type. Grommet type, please refer to the dimension of sub-base and single grommet valve.

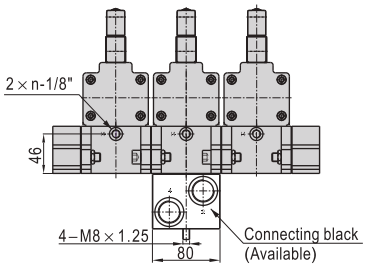

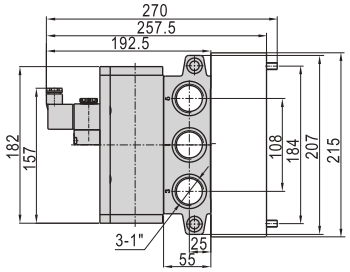

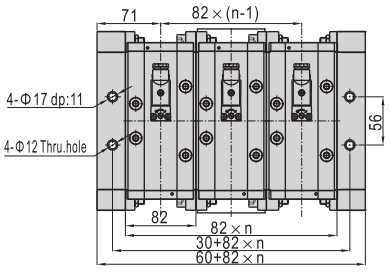

ESV620/630+ESV602M+ESV603M+ESV604M

Note: This is the dimensional drawing of terminal type. Grommet type, please refer to the dimension of sub-base and single grommet valve.

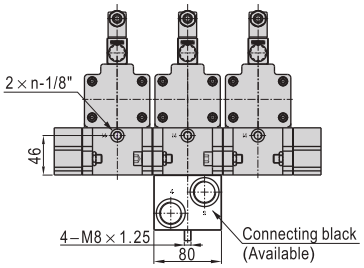

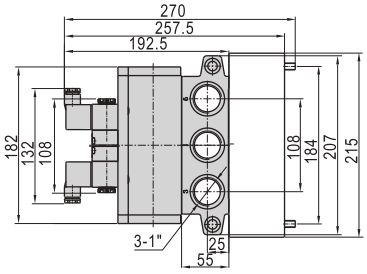

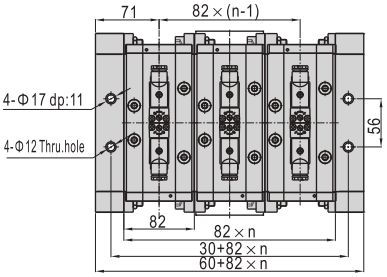

Coil

The coils and internal wiring drawing in connector and corresponding table of fitted products are provided for hd convenience of your selection.

Ordering code

CD A080 A

Coil type	Voltage
CD: Terminal	A: AC220V
CL: Grommet	B: DC24V
	C: AC110V
	E: AC24V
	F: DC12V

Coil's bore

A080: The first product of Φ8.0mm bore)
A092: The first product of Φ9.0mm bore)

Attentions for block wiring

Coil terminal with DC specification has polar indicator lights, thus when wiring, notice positive and negative poles, "1" shall be connected to positive pole, "2" to negative pole. If the poles are connected inversely, the indicator lights will not shine but valve still actuates.

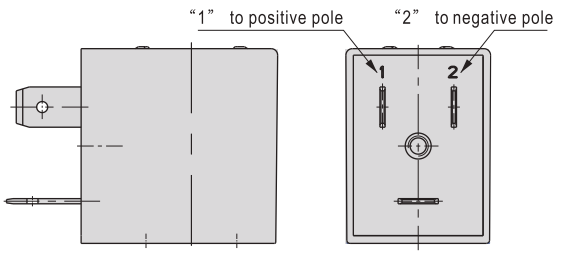

080 Series

Production series	Coil type	Voltage	Coil inside connection diagram	Connector type	Connector inside connection diagram	Memo
3V100 Series 4V100 Series 4M100 Series	CDA080 Terminal	AC	1 Coil 2	PL1515T-P1	-	Applied to CDA080 AC、DC type coil
				PL1515T-P2	1 R LED Red 2	Applied to CDA080 AC type coil
	CDA080 Terminal	DC		PL1515T-P3	1 R LED Green 2	Applied to CDA080 DC type coil
	CLA080 Grommet	AC	1 Coil 2	–	–	–
	CLA080 Grommet	DC		–	–	–

092 Series

Production series	Coil type	Voltage	Coil inside connection diagram	Connector type	Connector inside connection diagram	Memo
3V1 Series 3V200 Series 3V300 Series 4V200 Series 4V300 Series 4V400 Series 4M200 Series 4M300 Series ESV200 Series ESV300 Series ESV400 Series ESV600 Series	CDA092 Terminal	AC	1 Coil 2	4V210-005-P1	-	Applied to CDA092 AC、DC type coil
				4V210-005-P2	1 R LED Red 2	Applied to CDA092 AC type coil
	CDA092 Terminal	DC		4V210-005-P3	1 R LED Green 2	Applied to CDA092 DC type coil
	CLA092 Grommet	AC		–	–	–
	CLA092 Grommet	DC		–	–	–

Product series

Air valve: 3A100 Series 52

Air valve: 3A200 Series 53

Air valve: 3A300 Series 54

Air valve: 4A100 Series 55

Air valve:4A200 Series 57

Air valve: 4A300 Series 59

Air valve: 4A400 Series 61

Manifold Series 63

Air valve(ISO standard): EAV Series 65

Installation and Application

1. Before installing, be sure the valve hasn't been damaged via transportation.
2. It's suggested to use the medium lubricated by 40 μ m filter element. Be aware of the flow direction and port size.
3. Please notice whether the installation condition accords with technical requirements (such as“act-uation frequency”, “working pressure” and “scope of application temperature”), then the equipment can be installed and used.
4. Notice the flow direction of air during installation, P is the air intake, A (B) is the work port and R (S) is the exhaust outlet.
5. Take measure to avoid vibration and frozen.
6. Firstly press the base gasket into the base, and then connect the base with the valve body by the affiliated screws. The base gasket can be pressed into the installation places that are not used temporarily, and then seal them with affiliated blank cap. When the system expands, take the blank cap off and install relative air valves;
7. To keep the dust away, please use the silencer for the exhaust ports. Never forget to install dirt-proof boot in air intake and outlet during dismounting.

3A100

Specification

Model	3A110-M5	3A120-M5	3A110-06	3A120-06
Fluid	Air(to be filtered by 40 μ m filter element)			
Acting	Exterior control			
Port size ①	M5		1/8"	
Orifice size	5.5mm²(Cv=0.31)		12.0mm²(Cv=0.67)	
Valve type	3 port 2 position			
Lubrication ②	Not required			
Operating pressure	0.15~0.8MPa(21~114psi)			
Proof pressure	1.5MPa(215psi)			
Temperature ℃	-20~70			
Material of body	Aluminum alloy			
Max. frequency ③	5 cycle/sec			

① G thread and NPT thread are available.
② Once lubricated air is used, continue with same medium to optimise valve life span. Lubricants like ISO VG32 or equivalent are recommended.
③ The maximum actuation frequency is in the no-load state.

Symbol

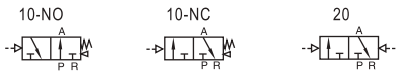

Product feature

1. Structure in sliding column mode: good tightness and sensitive reaction.
2. Double air control valves have memory function.
3. Internal hole adopts special processing technology which has little attrition friction, low start pressure and long service life.
4. No need to add oil for lubrication.
5. Multi-mounting helps to install and apply.
6. Integrate with the manifold to save installation space.

Flow chart

Model: 3A110–06–NO

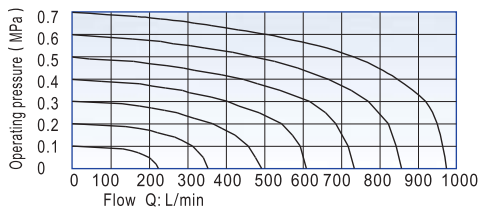

Inner structure

3A110

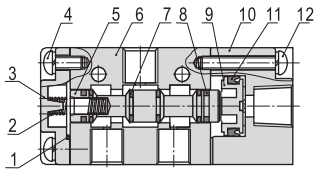

3A120

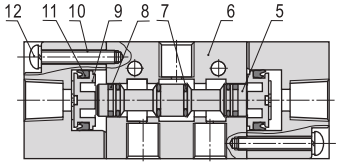

No.	Item	No.	Item	No.	Item
1	Bottom cover gasket	5	Spool	9	Piston
2	Spring	6	Body	10	Pilot body
3	Bottom cover	7	O-ring	11	Piston O-ring
4	Bottom cover screw	8	Wear ring	12	Piston screw

Ordering code

3A 1 10 06 NO G

Model
3A: Air Valve(3/2 way)

Code
1: 100 Series

Valve type
10: Single air control
20: Double air control

Port size
M5: M5
06: 1/8"

Thread type

Port size	Thread type
1/8"	G: G
	T: NPT
M5	No this code

Acting type

Valve type	Acting type
10	NC: Normally close
	NO: Normally open
20	NO code

Please refer to 63 for manifold specification and the order way.

Dimension

3A110

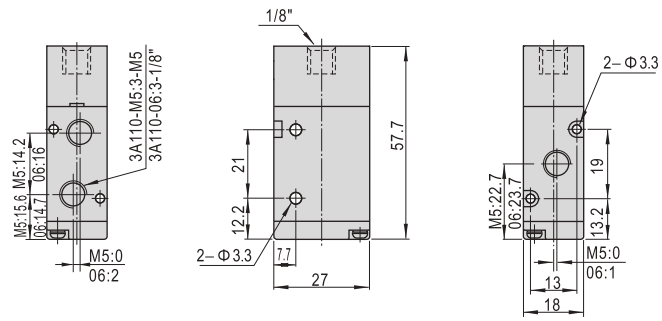

3A120

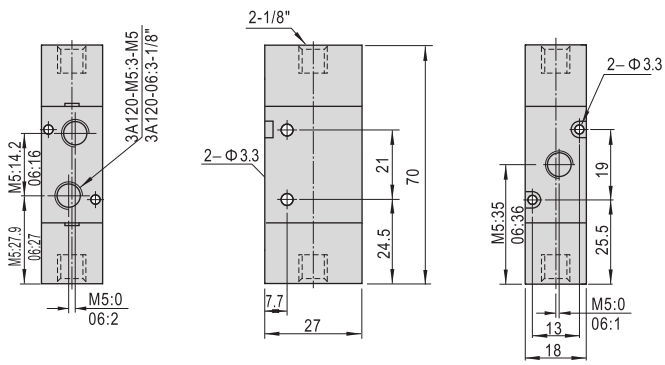

Specification

Model	3A210-06	3A220-06	3A210-08	3A220-08
Fluid	Air(to be filtered by 40 μ m filter element)			
Acting	Exterior control			
Port size ①	In=Out=1/8"		In=Out=1/4"	
Orifice size	14.0mm²(Cv=0.78)		16.0mm²(Cv=0.89)	
Valve type	3 port 2 position			
Lubrication ②	Not required			
Operating pressure	0.15~0.8MPa(21~114psi)			
Proof pressure	1.5MPa(215psi)			
Temperature ℃	-20~70			
Material of body	Aluminum alloy			
Max. frequency ③	5 cycle/sec			

① G thread and NPT thread are available.
② Once lubricated air is used, continue with same medium to optimise valve life span. Lubricants like ISO VG32 or equivalent are recommended.
③ The maximum actuation frequency is in the no-load state.

Symbol

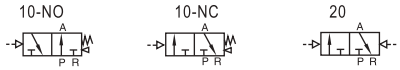

Product feature

1. Structure in sliding column mode: good tightness and sensitive reaction.
2. Double air control valves have memory function.
3. Internal hole adopts special processing technology which has little attrition friction, low start pressure and long service life.
4. No need to add oil for lubrication.
5. Multi-mounting helps to install and apply.
6. Integrate with the manifold to save installation space.

Flow chart

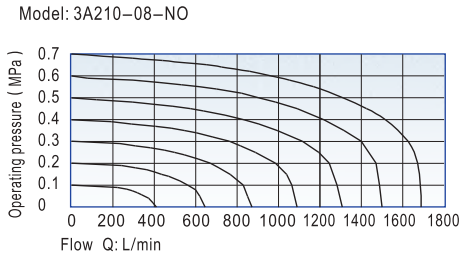

Inner structure

3A210

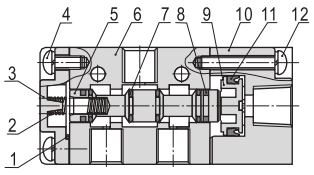

3A220

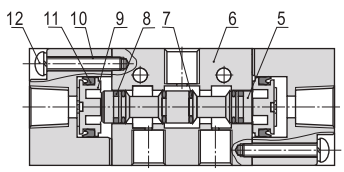

No.	Item	No.	Item	No.	Item
1	Bottom cover gasket	5	Spool	9	Piston
2	Spring	6	Body	10	Pilot body
3	Bottom cover	7	O-ring	11	Piston O-ring
4	Bottom cover screw	8	Wear ring	12	Piston screw

Ordering code

3A 2 10 08 NO G

- **Model**: 3A: Air Valve(3/2 way)
- **Code**: 2: 200 Series
- **Valve type**: 10: Single air control; 20: Double air control
- **Port size**: 06: 1/8"; 08: 1/4"
- **Thread type**: G: G; T: NPT
- **Acting type**

Valve type	Acting type
10	NC: Normally close
	NO: Normally open
20	NO code

Please refer to 63 for manifold specification and the order way.

Dimension

3A210

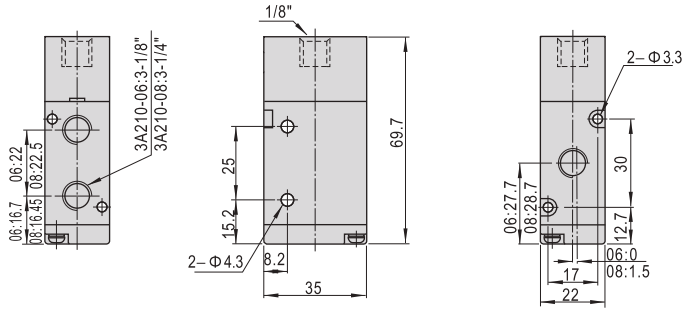

3A220

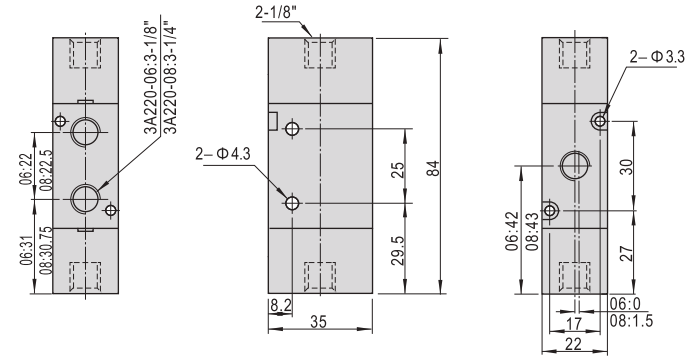

Specification

Model	3A310-08	3A320-08	3A310-10	3A320-10
Fluid	Air(to be filtered by 40 μ m filter element)			
Acting	Exterior control			
Port size ①	In=Out=1/4"		In=Out=3/8"	
Orifice size	25.0mm^2(Cv=1.35)		30.0mm^2(Cv=1.67)	
Valve type	3 port 2 position			
Lubrication ②	Not required			
Operating pressure	0.15~0.8MPa(21~114psi)			
Proof pressure	1.5MPa(215psi)			
Temperature ℃	-20~70			
Material of body	Aluminum alloy			
Max. frequency ③	5 cycle/sec			

① G thread and NPT thread are available.
② Once lubricated air is used, continue with same medium to optimise valve life span. Lubricants like ISO VG32 or equivalent are recommended.
③ The maximum actuation frequency of no-load state.

Symbol

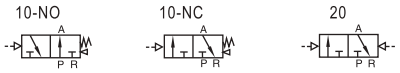

Product feature

1. Structure in sliding column mode: good tightness and sensitive reaction.
2. Double air control valves have memory function.
3. Internal hole adopts special processing technology which has little attrition friction, low start pressure and long service life.
4. No need to add oil for lubrication.
5. Multi-mounting helps to install and apply.
6. Integrate with the manifold to save installation space.

Flow chart

Model: 3A310–10–NO

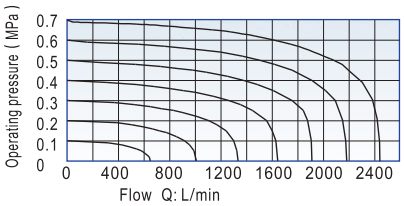

Ordering code

3A 3 10 10 NO G

Model
3A: Air Valve(3/2 way)

Code
3: 300 Series

Valve type
10: Single air control
20: Double air control

Port size
08: 1/4"
10: 3/8"

Thread type
G: G
T: NPT

Acting type

Valve type	Acting type
10	NC: Normally close
	NO: Normally open
20	NO code

Please refer to 63 for manifold specification and the order way.

Inner structure

3A310

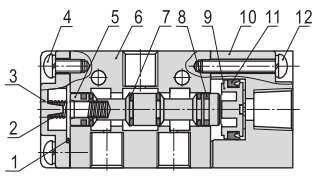

3A310

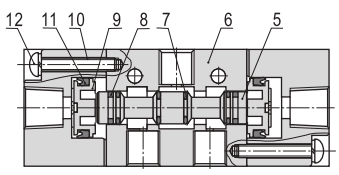

No.	Item	No.	Item	No.	Item
1	Bottom cover gasket	5	Spool	9	Piston
2	Spring	6	Body	10	Pilot body
3	Bottom cover	7	O-ring	11	Piston O-ring
4	Bottom cover screw	8	Wear ring	12	Piston screw

Dimension

3A310

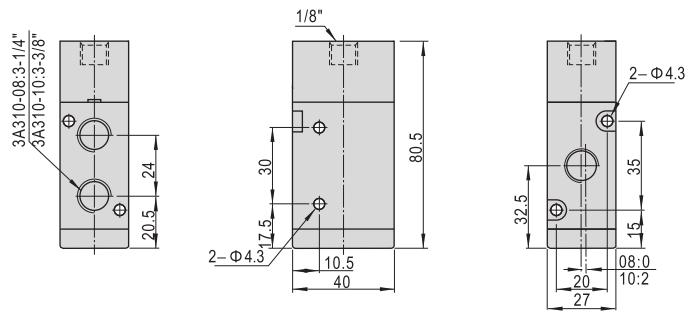

3A310

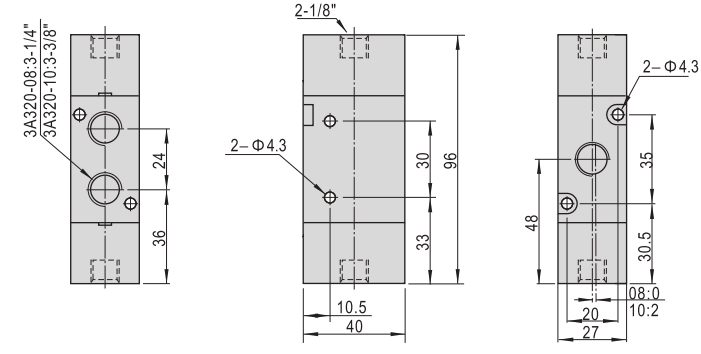

Specification

Model	4A110–M5 4A120-M5	4A130C-M5 4A130E-M5 4A130P-M5	4A110–06 4A120-06	4A130C-06 4A130E-06 4A130P-06
Fluid	Air(to be filtered by 40 μ m filter element)			
Acting	Exterior control			
Port size ①	In=Out=M5		In=Out=1/8"	
Orifice size	5.5mm² (Cv=0.31)	5.0mm² (Cv=0.28)	12.0mm² (Cv=0.67)	9.0mm² (Cv=0.50)
Valve type	5 port 2 position	5 port 3 position	5 port 2 position	5 port 3 position
Operating pressure	0.15~0.8MPa(21~114psi)			
Proof pressure	1.5MPa(215psi)			
Temperature ℃	-20~70			
Material of body	Aluminum alloy			
Lubrication ②	Not required			
Max. frequency ③	5 cycle/sec	3 cycle/sec	5 cycle/sec	3 cycle/sec
Weight (g)	4A110–M5:85 4A120-M5:140	165	4A110–06:85 4A120-06:140	165

① G thread and NPT thread are available.
② Once lubricated air is used, continue with same medium to optimise valve life span. Lubricants like ISO VG32 or equivalent are recommended.
③ The maximum actuation frequency of no-load state.

Symbol

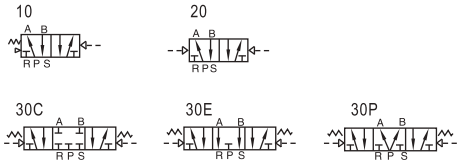

Product feature

1. Structure in sliding column mode: good tightness and sensitive reaction.
2. Three position air valves have three kinds of central function for your choice.
3. Double air control valves have memory function.
4. Internal hole adopts special processing technology which has little attrition friction, low start pressure and long service life.
5. No need to add oil for lubrication.
6. Integrate with the manifold to save installation space.

Ordering code

4A 1 10 06 G

Model
4A: Air Valve(5/2, 5/3 way)

Code
1: 100 Series

Valve type

10: Single air control 5/2 way
20: Double air control 5/2 way
30C: Double air control 5/3 way closed center
30E: Double air control 5/3 way exhaust center
30P: Double air control 5/3 way pressure center

Thread type

Port size	Thread type
1/8"	G: G
	T: NPT
M5	No this code

Port size

M5: M5
06: 1/8"

Please refer to 64 for manifold specification and the order way.

Flow chart

Model: 4A110–M5

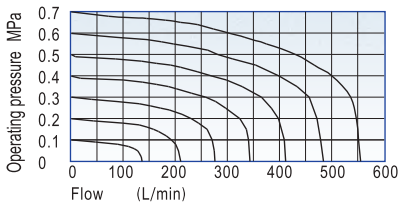

Model: 4A110–06

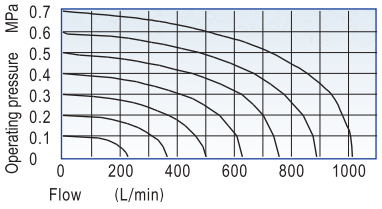

Inner structure

4A110

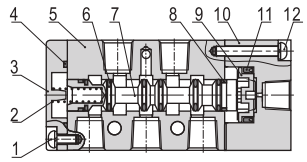

4A120

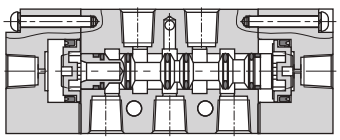

4A130C

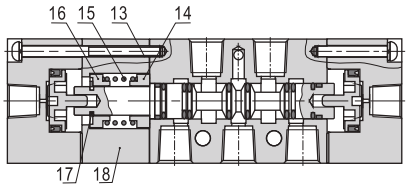

No.	Item	No.	Item	No.	Item
1	Screw	7	Spool	13	Screw
2	Spring	8	Wear ring	14	Spring holder
3	Bottom cover	9	Piston	15	Return Spring
4	Bottom cover gasket	10	Pilot body	16	Spring holder
5	Body	11	O-ring	17	E Clip
6	O-ring	12	Screw	18	Side cover

Dimension

4A110

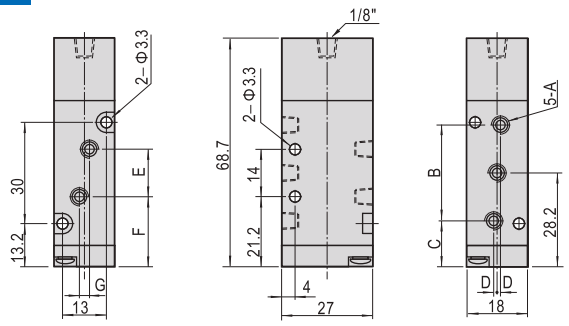

Model\Item	A	B	C	D	E	F	G
4A110-M5	M5x0.8	27	14.7	0	14	21.2	0
4A110-06	1/8"	28	14.2	1	16	20.2	3

4A120

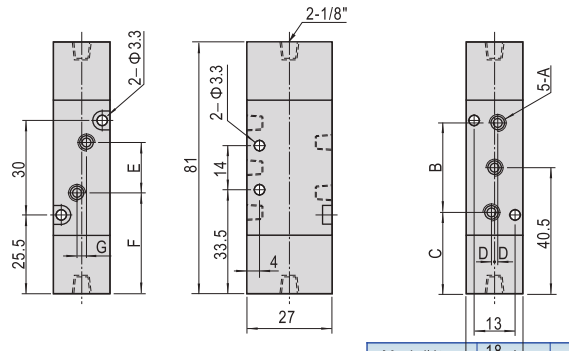

Model\Item	A	B	C	D	E	F	G
4A120-M5	M5x0.8	27	27	0	14	33.5	0
4A120-06	1/8"	28	26.5	1	16	32.5	3

4A130

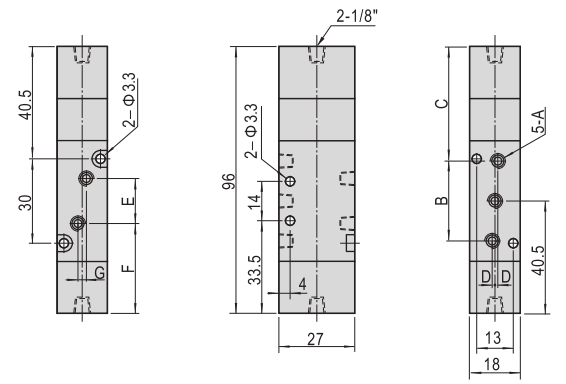

Model\Item	A	B	C	D	E	F	G
4A130-M5	M5x0.8	27	42	0	14	33.5	0
4A130-06	1/8"	28	41.5	1	16	32.5	3

Specification

Model	4A210–06 4A220-06	4A230C-06 4A230E-06 4A230P-06	4A210–08 4A220-08	4A230C-08 4A230E-08 4A230P-08
Fluid	Air(to be filtered by 40 μ m filter element)			
Acting	Exterior control			
Port size ①	In=Out=Exhaust=1/8"		In=Out=1/4" Exhaust=1/8"	
Orifice size	14.0mm² (Cv=0.78)	12.0mm² (Cv=0.67)	16.0mm² (Cv=0.89)	12.0mm² (Cv=0.67)
Valve type	5 port 2 position	5 port 3 position	5 port 2 position	5 port 3 position
Operating pressure	0.15~0.8MPa(21~114psi)			
Proof pressure	1.5MPa(215psi)			
Temperature ℃	-20~70			
Material of body	Aluminum alloy			
Lubrication ②	Not required			
Max. frequency ③	5 cycle/sec	3 cycle/sec	5 cycle/sec	3 cycle/sec
Weight (g)	4A210–06:185 4A220-06:285	365	4A210–08:185 4A220-08:285	365

① G thread and NPT thread are available.
② Once lubricated air is used, continue with same medium to optimise valve life span. Lubricants like ISO VG32 or equivalent are recommended.
③ The maximum actuation frequency of no-load state.

Symbol

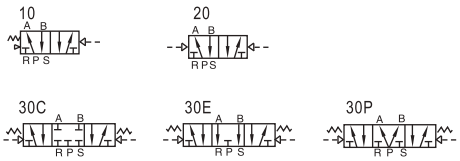

Product feature

1. Structure in sliding column mode: good tightness and sensitive reaction.
2. Three position air valves have three kinds of central function for your choice.
3. Double air control valves have memory function.
4. Internal hole adopts special processing technology which has little attrition friction, low start pressure and long service life.
5. No need to add oil for lubrication.
6. Integrate with the manifold to save installation space.

Ordering code

4A 2 10 08 G

- **Model**: 4A: Air Valve(5/2, 5/3 way)
- **Code**: 2: 200 Series
- **Valve type**:
  - 10: Single air control 5/2 way
  - 20: Double air control 5/2 way
  - 30C: Double air control 5/3 way closed center
  - 30E: Double air control 5/3 way exhaust center
  - 30P: Double air control 5/3 way pressure center
- **Port size**:
  - 06: 1/8"
  - 08: 1/4"
- **Thread type**:
  - G: G
  - T: NPT

Please refer to 64 for manifold specification and the order way.

Flow chart

Model: 4A210–06

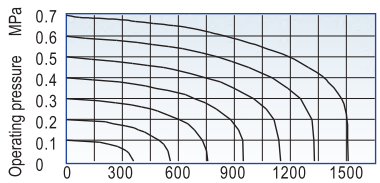

Model: 4A210–08

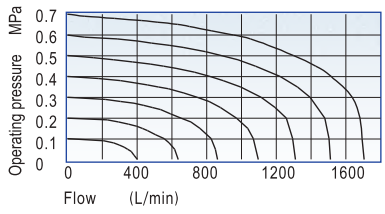

Inner structure

4A210

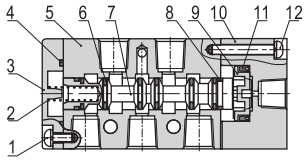

4A220

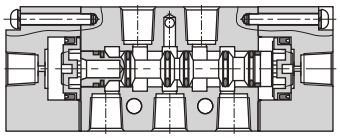

4A230C

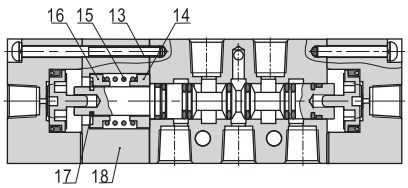

No.	Item	No.	Item	No.	Item
1	Screw	7	Spool	13	Screw
2	Spring	8	Wear ring	14	Spring holder
3	Bottom cover	9	Piston	15	Return Spring
4	Bottom cover gasket	10	Pilot body	16	Spring holder
5	Body	11	O-ring	17	E Clip
6	O-ring	12	Screw	18	Side cover

Dimension

4A210

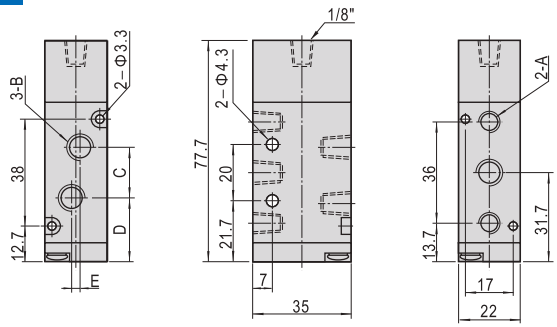

Model\Item	A	B	C	D	E
4A210-06	1/8"	1/8"	18	22.7	0
4A210-08	1/8"	1/4"	21	21.2	3

4A220

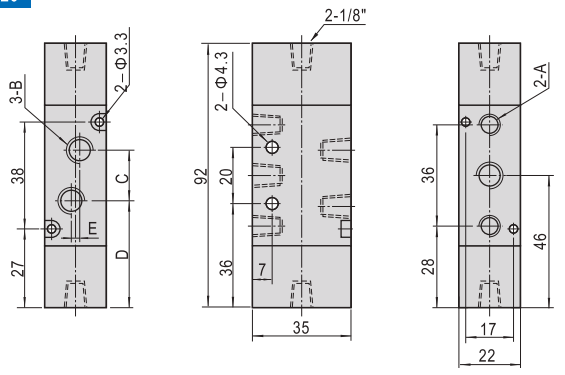

Model\Item	A	B	C	D	E
4A220-06	1/8"	1/8"	18	37	0
4A220-08	1/8"	1/4"	21	35.5	3

4A230

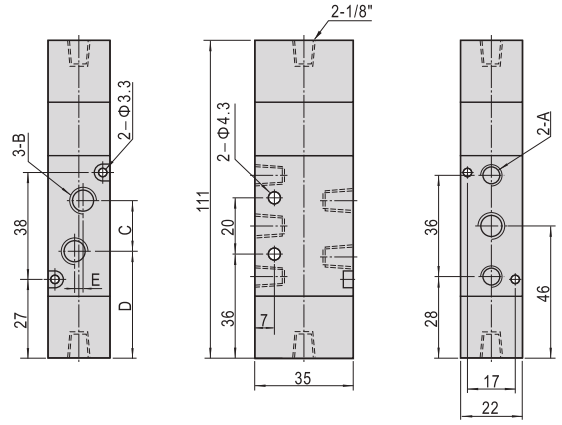

Model\Item	A	B	C	D	E
4A230-06	1/8"	1/8"	18	37	0
4A230-08	1/8"	1/4"	21	35.5	3

Symbol

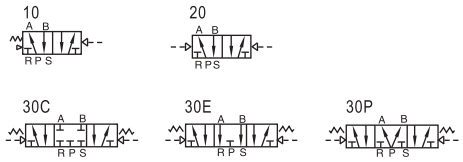

Product feature

1. Structure in sliding column mode: good tightness and sensitive reaction.
2. Three position air valves have three kinds of central function for your choice.
3. Double air control valves have memory function.
4. Internal hole adopts special processing technology which has little attrition friction, low start pressure and long service life.
5. No need to add oil for lubrication.
6. Integrate with the manifold to save installation space.

Flow chart

Model: 4A310–08

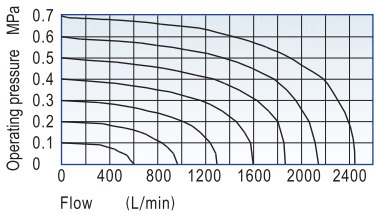

Model: 4A310–10

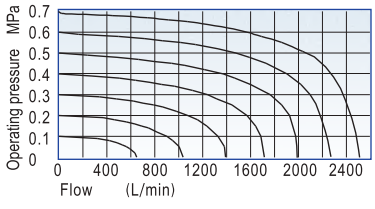

Specification

Model	4A310–08 4A320-08	4A330C-08 4A330E-08 4A330P-08	4A310–10 4A320-10	4A330C-10 4A330E-10 4A330P-10
Fluid	Air(to be filtered by 40 μ m filter element)			
Acting	Exterior control			
Port size ①	In=Out=Exhaust=1/4"		In=Out=3/8" Exhaust=1/4"	
Orifice size	25.0mm² (Cv=1.40)	18.0mm² (Cv=1.00)	30.0mm² (Cv=1.68)	18.0mm² (Cv=1.00)
Valve type	5 port 2 position	5 port 3 position	5 port 2 position	5 port 3 position
Operating pressure	0.15~0.8MPa(21~114psi)			
Proof pressure	1.5MPa(215psi)			
Temperature ℃	-20~70			
Material of body	Aluminum alloy			
Lubrication ②	Not required			
Max. frequency ③	4 cycle/sec	3 cycle/sec	4 cycle/sec	3 cycle/sec
Weight (g)	4A310–08:275 4A320-08:365	505	4A310–10:275 4A320-10:365	505

① G thread and NPT thread are available.
② Once lubricated air is used, continue with same medium to optimise valve life span. Lubricants like ISO VG32 or equivalent are recommended.
③ The maximum actuation frequency of no-load state.

Ordering code

4A 3 10 10 G

- **Model**: 4A: Air Valve(5/2, 5/3 way)
- **Code**: 3: 300 Series
- **Valve type**:
  - 10: Single air control 5/2 way
  - 20: Double air control 5/2 way
  - 30C: Double air control 5/3 way closed center
  - 30E: Double air control 5/3 way exhaust center
  - 30P: Double air control 5/3 way pressure center
- **Port size**:
  - 08: 1/4"
  - 10: 3/8"
- **Thread type**:
  - G: G
  - T: NPT

Please refer to 64 for manifold specification and the order way.

Inner structure

4A310

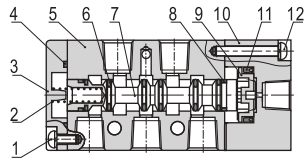

4A32 0

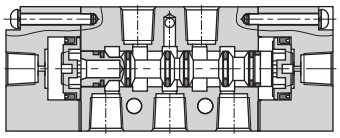

4A330C

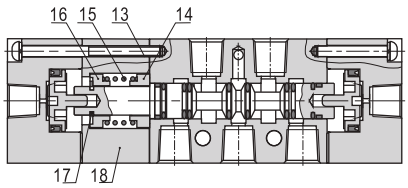

No.	Item	No.	Item	No.	Item
1	Screw	7	Spool	13	Screw
2	Spring	8	Wear ring	14	Spring holder
3	Bottom cover	9	Piston	15	Return Spring
4	Bottom cover gasket	10	Pilot body	16	Spring holder
5	Body	11	O-ring	17	E Clip
6	O-ring	12	Screw	18	Side cover

Dimension

4A310

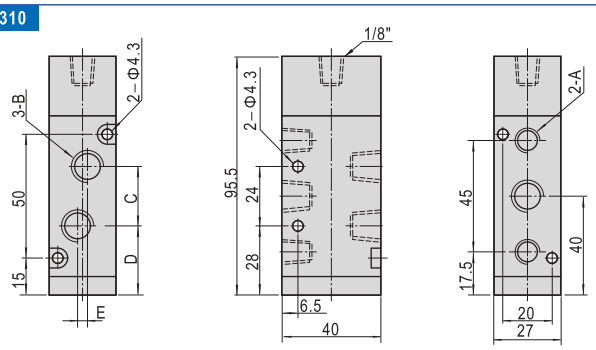

Model\Item	A	B	C	D	E
4A310-08	1/4"	1/4"	22	29	0
4A310-10	1/4"	3/8"	24	28	4

4A320

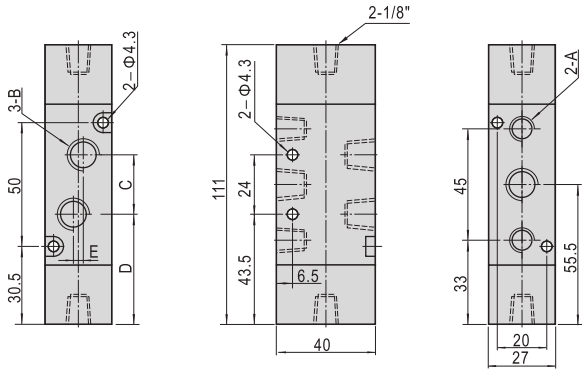

Model\Item	A	B	C	D	E
4A320-08	1/4"	1/4"	22	44.5	0
4A320-10	1/4"	3/8"	24	43.5	4

4A330

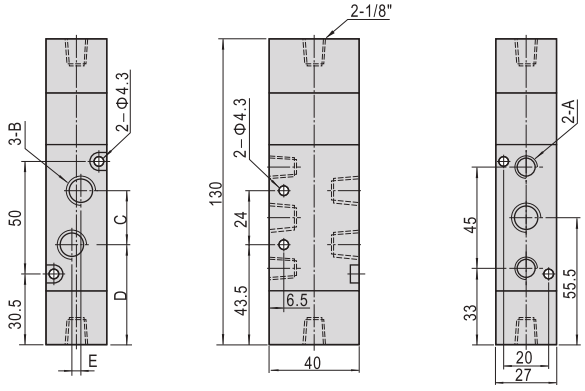

Model\Item	A	B	C	D	E
4A330-08	1/4"	1/4"	22	44.5	0
4A330-10	1/4"	3/8"	24	43.5	4

Specification

Model	4A410–15	4A420-15	4A430C-15	4A430E-15	4A430P-15
Fluid	Air(to be filtered by 40 μ m filter element)				
Acting	Exterior control				
Port size ①	In=Out=Exhaust=1/2"				
Orifice size	50.0mm²(Cv=2.79)		30.0mm²(Cv=1.68)		
Valve type	5 port 2 position		5 port 3 position		
Operating pressure	0.15~0.8MPa(21~114psi)				
Proof pressure	1.5MPa(215psi)				
Temperature ℃	-20~70				
Material of body	Aluminum alloy				
Lubrication ②	Not required				
Max. frequency ③	3 cycle/sec				
Weight (g)	555	685	735		

① G thread and NPT thread are available.
② Once lubricated air is used, continue with same medium to optimise valve life span. Lubricants like ISO VG32 or equivalent are recommended.
③ The maximum actuation frequency of no-load state.

Symbol

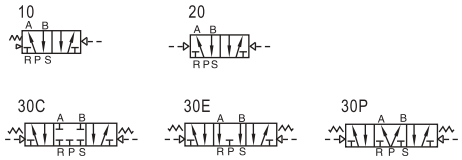

Product feature

1. Structure in sliding column mode: good tightness and sensitive reaction.
2. Three position air valves have three kinds of central function for your choice.
3. Double air control valves have memory function.
4. Internal hole adopts special processing technology which has little attrition friction, low start pressure and long service life.
5. No need to add oil for lubrication.
6. Integrate with the manifold to save installation space.

Flow chart

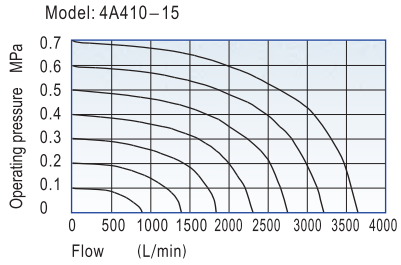

Ordering code

4A 4 10 15 G

- **Model**: 4A: Air Valve(5/2, 5/3 way)
- **Code**: 4: 400 Series
- **Valve type**:
  - 10: Single air control 5/2 way
  - 20: Double air control 5/2 way
  - 30C: Double air control 5/3 way closed center
  - 30E: Double air control 5/3 way exhaust center
  - 30P: Double air control 5/3 way pressure center
- **Port size**: 15: 1/2"
- **Thread type**:
  - G: G
  - T: NPT

Please refer to 64 for manifold specification and the order way.

Inner structure

4A410

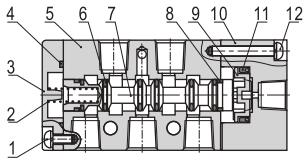

4A420

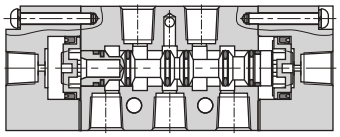

4A430C

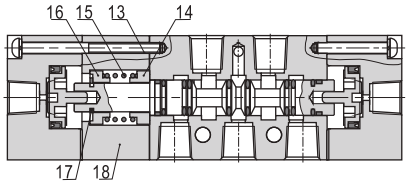

No.	Item	No.	Item	No.	Item
1	Screw	7	Spool	13	Screw
2	Spring	8	Wear ring	14	Spring holder
3	Bottom cover	9	Piston	15	Return Spring
4	Bottom cover gasket	10	Pilot body	16	Spring holder
5	Body	11	O-ring	17	E Clip
6	O-ring	12	Screw	18	Side cover

Dimension

4A410

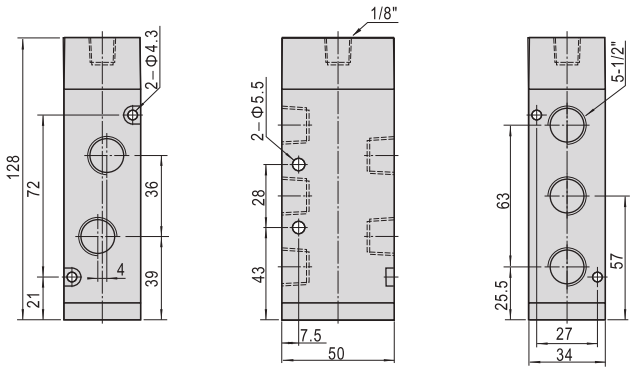

4A420

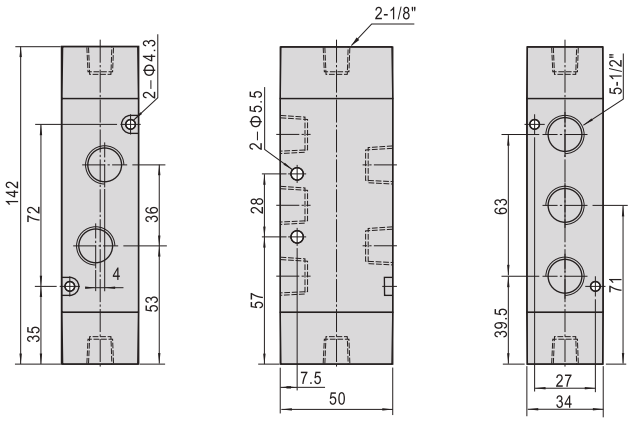

4A430

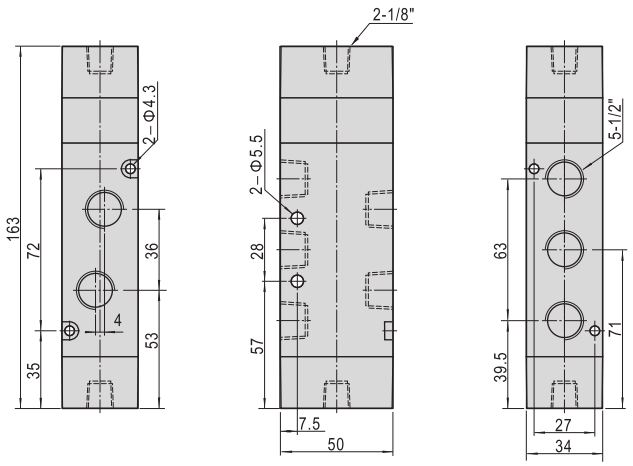

Specification

Item\Manifold Model	100M	200M	300M
Fluid	Air(to be filtered by 40 μ m filter element)		
Temperature ℃	-20~70		
Adaotable valve's series	3A100 Series	3A200 Series	3A300 Series

Ordering code

Ordering code contains the two parts of the manifold's and the blank plate's.

1 Ordering code for manifold

3V100M 5F G

Model

3V100M: 100 Series Manifold
3V200M: 200 Series Manifold
3V300M: 300 Series Manifold

Thread type

G: G
T: NPT

Number of stations

1F: 1 Station
2F: 2 Station
.....
16F: 16 Station

2 Ordering code for blank plate

P-3V100M R2

Model

3V100M: 100 Series Manifold
3V200M: 200 Series Manifold
3V300M: 300 Series Manifold

Code

R2: Blank plate for manifold

Remark:1. Manifold kits contains manifold, seal and screw.
2. Blank plate kits contains blank plate, and screw.

Product feature

1. It is available to integrate the direction control valves of the same series to form valve group to save space and cost;
2. It is easy to examine when there are faults owning to the unified air intake and exhaust and unified wiring;
3. Flexible combination and strong expansion capability can make any combination or expansion of the numbers of direction control valves that are connected.

Dimensions

With 3A air valve

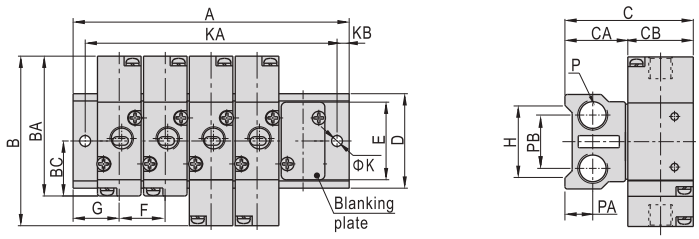

Model\Item	B	BA	BC	C	CA	CB	D	E	F	G	H	K	KB	P	PA	PB
3V100M	70	57.7	22.7	53	26	27	39	32	19	19	30	4.5	5	1/4"	11.5	22
3V200M	84	69.7	27.7	61	26	35	45	40	23	23	35	4.5	6	1/4"	11.5	25
3V300M	96	80.5	32.5	70	30	40	52	47	28	27	42	4.5	6	3/8"	13.5	28

Model\Item	A															
	1F	2F	3F	4F	5F	6F	7F	8F	9F	10F	11F	12F	13F	14F	15F	16F
3V100M	38	57	76	95	114	133	152	171	190	209	228	247	266	285	304	323
3V200M	46	69	92	115	138	161	184	207	230	253	276	299	322	345	368	391
3V300M	54	82	110	138	166	194	222	250	278	306	334	362	390	418	446	474

Model\Item	KA															
	1F	2F	3F	4F	5F	6F	7F	8F	9F	10F	11F	12F	13F	14F	15F	16F
3V100M	28	47	66	85	104	123	142	161	180	199	218	237	256	275	294	313
3V200M	34	57	80	103	126	149	172	195	218	241	264	287	310	333	356	379
3V300M	42	70	98	126	154	182	210	238	266	294	322	350	378	406	434	462

Manifold

Specification

Item\Manifold Model	100M	200M	300M	400M
Fluid	Air(to be filtered by 40 μ m filter element)			
Temperature ℃	-20~70			
Adaotable valve's series	4A100 Series	4A200 Series	4A300 Series	4A400 Series

Ordering code

Ordering code contains the two parts of the manifold's and the blank plate's.

1 Ordering code for manifold

100M 5F G

Model

100M: 100 Series Manifold
200M: 200 Series Manifold
300M: 300 Series Manifold
400M: 400 Series Manifold

Thread type

G: G
T: NPT

Number of stations ①

1F: 1 Station
2F: 2 Station
.....
16F: 16 Station

2 Ordering code for blank plate

P–100M R2

Model

100M: 100 Series Manifold
200M: 200 Series Manifold
300M: 300 Series Manifold
400M: 400 Series Manifold

Code

R2: Blank plate for manifold

① 100M, 200M series have a maximum of 16 stations ; 300M series have a maximum of 12 stations; 400M series have a maximum of 8 stations.

Product feature

1. It is available to integrate the direction control valves of the same series to form valve group to save space and cost;
2. It is easy to examine when there are faults owning to the unified air intake and exhaust and unified wiring;
3. Flexible combination and strong expansion capability can make any combination or expansion of the numbers of direction control valves that are connected.

Dimension

With 4A air valve

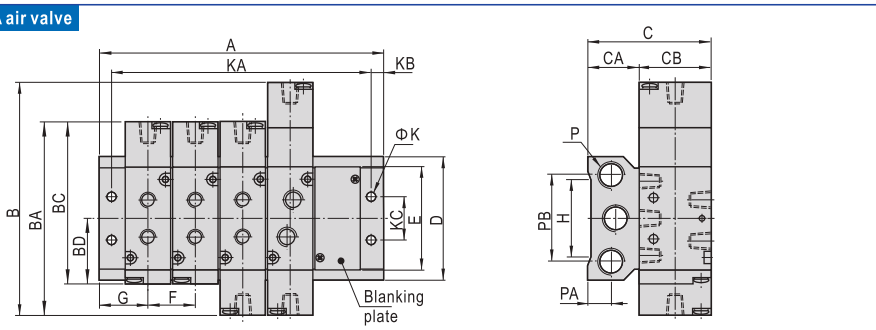

Model\Item	B	BA	BC	BD	C	CA	CB	D	E	F	G	H	K	KB	KC	P	PA	PB
100M□F	96	81	68.7	28	53	26	27	58	43	19	19	36	4.5	5	20	1/4"	12.5	40
200M□F	111	92	77.7	31.7	62	27	35	61	51	23	23	38	4.5	6	21	1/4"	13	43
300M□F	130	111	95.5	40	71	31	40	75	65	28	27	54	4.5	6	26	3/8"	15	53
400M□F	163	142	128	57	89	39	50	104	94.5	35	31.5	75	5.5	7	32	1/2"	19	68

Model\Item	A															
	1F	2F	3F	4F	5F	6F	7F	8F	9F	10F	11F	12F	13F	14F	15F	16F
100M□F	38	57	76	95	114	133	152	171	190	209	228	247	266	285	304	323
200M□F	46	69	92	115	138	161	184	207	230	253	276	299	322	345	368	391
300M□F	54	82	110	138	166	194	222	250	278	306	334	362	-	-	-	-
400M□F	63	98	133	168	203	238	273	308	-	-	-	-	-	-	-	-

Model\Item	KA															
	1F	2F	3F	4F	5F	6F	7F	8F	9F	10F	11F	12F	13F	14F	15F	16F
100M□F	28	47	66	85	104	123	142	161	180	199	218	237	256	275	294	313
200M□F	34	57	80	103	126	149	172	195	218	241	264	287	310	333	356	379
300M□F	42	70	98	126	154	182	210	238	266	294	322	350	-	-	-	-
400M□F	49	84	119	154	189	224	259	294	-	-	-	-	-	-	-	-

Symbol

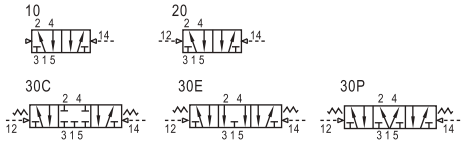

Product feature

1. Succinct appearance and compact conformation.
2. The installation size conforms to ISO 5599/1 standard.
3. Because of the special seals, the feature are large flow rate and long lifetime.
4. External pilot, can be used without electrical.
5. You need install the valve together with the sub-base. There are individual and manifold sub-base.
6. There are various connection and installation method for manifold. It is easy to use.
7. The manifold of 200\300\400 series have the function of exhaust throttling, so no need to connect another throttle valve.
8. Because of be used external pilot, the working pressure of double air control valve can be zero or vacuum.

Ordering code of valve

EAV 2 10

Model
ESV: ISO standard air valve

Code
- 2: 200 Series
- 3: 300 Series
- 4: 400 Series
- 6: 600 Series

Valve type
- 10: Single air control 5/2 way
- 20: Double air control 5/2 way
- 30C: Double air control 5/2 way closed center
- 30E: Double air control 5/2 way exhaust center
- 30P: Double air control 5/2 way pressure center

Ordering code of cover plate

P-EAV210 R1

Accessories code
P:Unit accessories

Adapt production

Accessories type
R1: Cover plate

Note: 600 series have not cover plate.

Specification

Model		200 Series	300 Series	400 Series	600 Series
Orifice size(Cv) mm²		32(Cv=1.8)	42(Cv=2.32)	69(Cv=3.85)	108(Cv=6.0)
Fluid		Air(to be filtered by 40 μ m filter element)			
Acting		Extend pilot			
Lubrication ①		Not required			
Operating Pressure	Single air control	0.2~1.0MPa(29~145psi)			
	Double air control	-0.09~1.0MPa(-13~145psi)			
Control pressure(extermal pilot)		0.2~1.0MPa(29~145psi)			
Proof pressure		1.5MPa(215psi)			
Temperature		-20~70℃			
Port size(manifold) ②		1/4"	3/8"	1/2"	3/4"
Port size(end plate)		3/8"	1/2"	3/4"	1"
Installation size		ISO 5599-1 standard			

Note ①: Once lubricated air is used, continue with same medium to optimise valve life span. Lubricants like ISO VG32 or equivalent are recommended.
②: G thread is available.

Ordering code of manifold

ESV 20 1M G □ □

Model
EAV: ISO standard solenoid valve

Code
- 2: 200 Series
- 3: 300 Series
- 4: 400 Series
- 6: 600 Series

Manifold type
- 1M: Individual sub-base
- 2M: Manifold sub-base
- 3M: End plate kit
- 4M: Side port block

Port position type

1M	Blank: Side port
	B: Bottom Port
2M	Blank: Left side port
	R: Right side port
	B: Bottom Port
4M	Blank: Left side port
	R: Right side port

External pilot port type

1M	Blank: Individual pilot port
2M	Blank: Individual pilot port
	W: Centralized pilot port

Thread type
G: G

Note:1. For the same model, the port size of the end-plate is bigger than the sub-base (For example ESV202M, the port size of sub-base is 1/4" , and the port size of end plate is 3/8").
2. Only individual pilot port is available for individual sub-base.
3. The manifold sub-base must be used with end plate kit, individual pilot port and centralized pilot port can be mixed.
4. 600 series individual sub-base only has side port, 600 series manifold sub-base only has individual pilot port and bottom port.
5. Only 600 series have side port block.

Ordering code of accessories

P-ESV200M R2

Accessories code
P: Unit accessories

Code
- ESV200M: 200 Series manifold
- ESV300M: 300 Series manifold
- ESV400M: 400 Series manifold
- ESV600M: 600 Series manifold

Accessories type
R2: Blanking plate

EAV

Installation and operation(For 200, 300, 400 series)

1. How to turn ESV series solenoid valve to EAV series air control valve

1.1. To turn ESV series solenoid valve (except 600 series) to EAV seires air control valve, you must order cover plate first(the ordering code is P–EAV210–R1),then replace the coil unit and the pilot body with cover plate. the different gasket mounting can create different EAV air valve type as shown below.

1.2. Single solenoid valve turn to single air control valve:

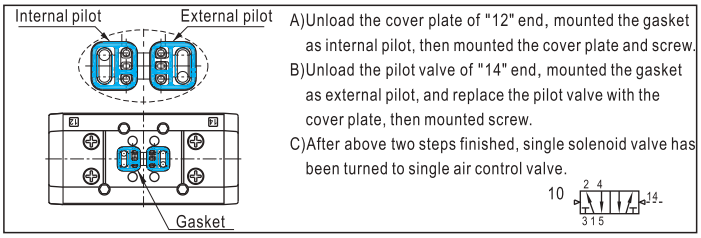

1.3. Double solenoid valve turn to double air control valve

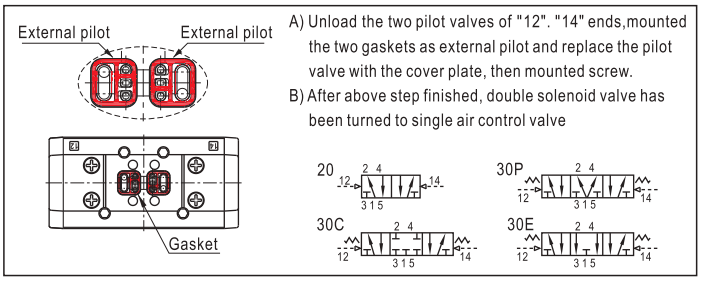

2. The classification and selection of the parallel manifold sub-base

2.1. According to the direction of pilot air supply, we can divide the sub-base manifold into two types: the individual pilot and centralized pilot.

2.2. If you select the individual pilot, the fitting must be connected to the individual pilot ports. If you select the centralized pilot type, the fitting must be connected to the centralized pilot ports.

2.3. If you use parallel manifold, all of the manifold must be used the same pilot type: such as, all of them are the individual pilot type, or all of them are the centralized pilot type.

*Note: Only when you use the external pilot type, you can select the individual pilot or centralized pilot. When you use the internal pilot type, the pilot ports on the manifold are ineffective.

3. The position and specification of the parallel manifold sub-base

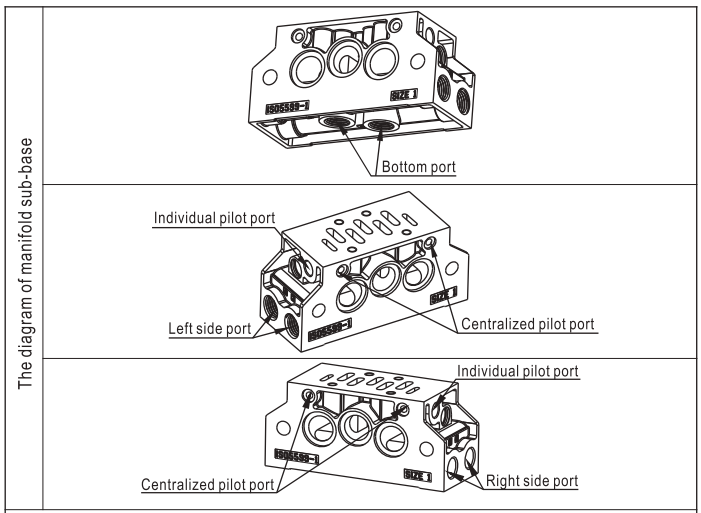

Port status of different manifold sub-base

Port / Port name / working condition / Ordering code	Left side port	Right side port	Bottom port	Centralized pilot port	Individual pilot port
ESV202MG	Use	Unused	Unused	Unused	Use
ESV202MGR	Unused	Use	Unused	Unused	Use
ESV202MGB	Unused	Unused	Use	Unused	Use
ESV202MGW	Use	Unused	Unused	Use	Unused
ESV202MGWR	Unused	Use	Unused	Use	Unused
ESV202MGWB	Unused	Unused	Use	Use	Unused

Note: Please seal the bottom port by plug, when it is unused.
The above list is an example of 200M series' ordering code, the other series is follow the same pattern, only need to change the series code.

4. Exhaust throttle function

4.1. The manifold has exhaust throttle function, the below picture shows the position of the exhaust throttle orifices on each side.

4.2. Use allen key to adjust the screw.

4.3. Rotate the screw clockwise to reduce the exhaust orifice, rotate the screw counter-clockwise to enlarge the exhaust orifice.

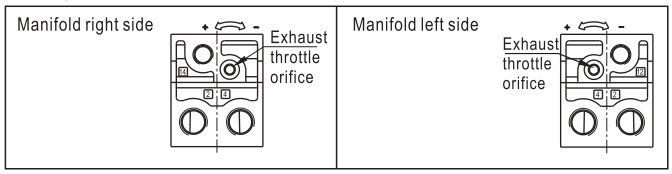

Flow chart

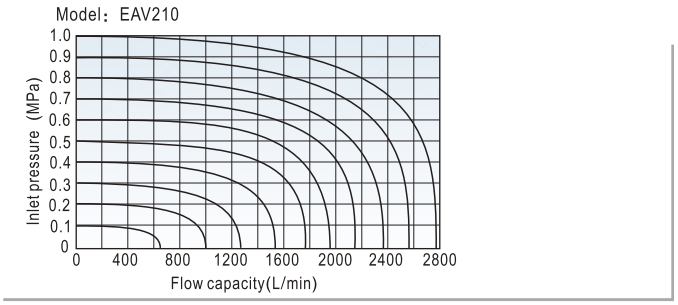

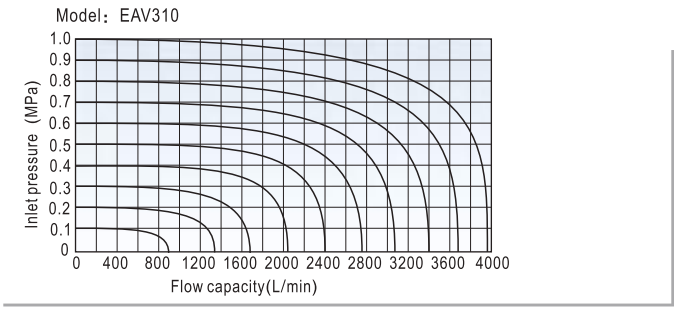

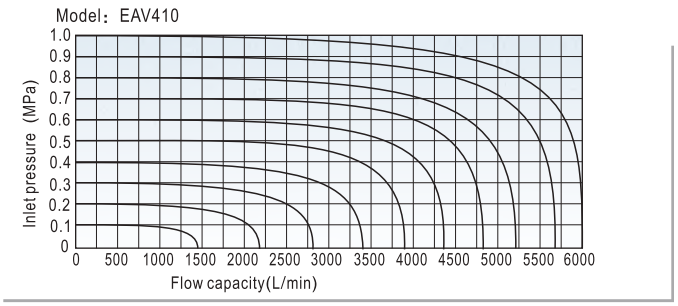

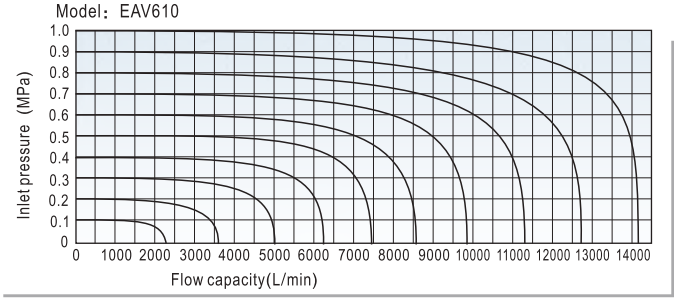

Inner structure

EAV210

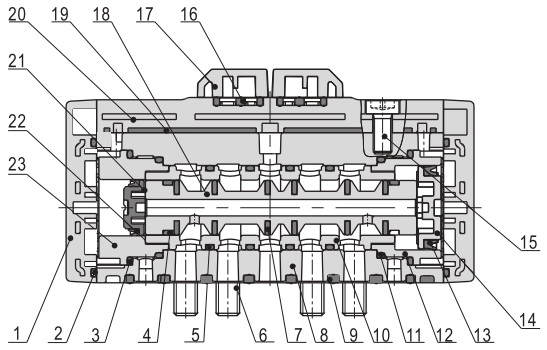

NO.	Item	NO.	Item	NO.	Item
1	Bottom cover	9	Gasket	17	Cover plate
2	O-ring	10	Spacer	18	Spool
3	O-ring	11	O-ring	19	Upper cover gasket
4	Wear ring	12	Big piston sheath	20	Upper cover
5	O-ring	13	Big piston O-ring	21	Small piston
6	Screw	14	Big piston	22	Small piston O-ring
7	O-ring	15	Screw	23	Small piston sheath
8	Body	16	Gasket		

Dimensions of valves

EAV210\EAV220

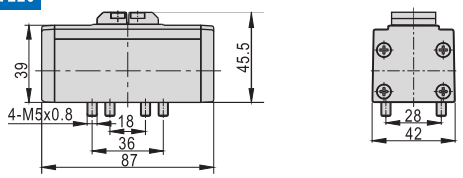

EAV230C\E\P

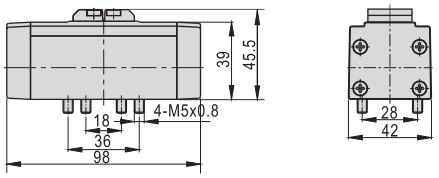

EAV310\EAV320

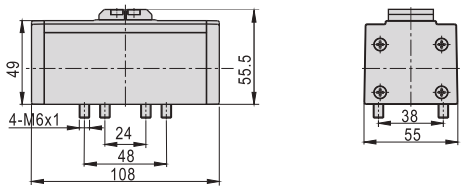

EAV330C\E\P

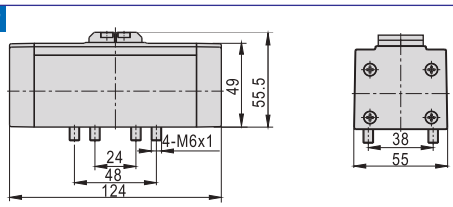

EAV410\EAV420

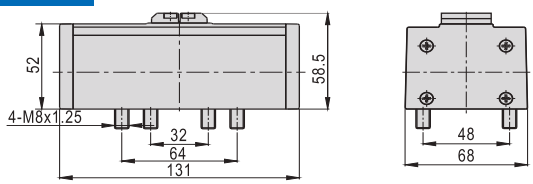

EAV430C\E\P

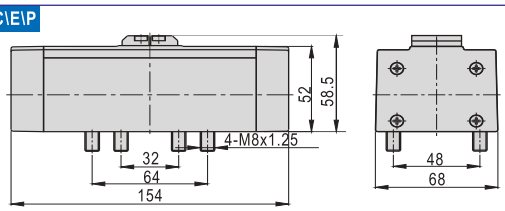

EAV610\620\630

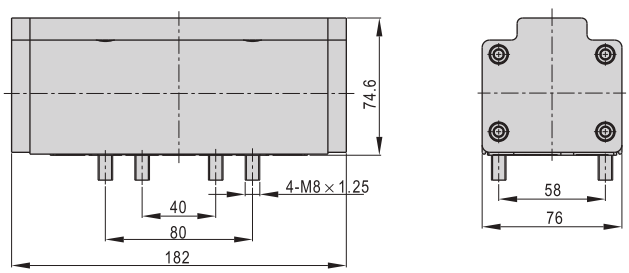

Dimensions of manifold

1. The dimensions of manifold are the same as ESV series's, please refer to page 41, 43, 45, 47.

Valves used with manifolds and their dimensions

1. EAV series valve must be used with the manifolds, the details are below：

Manifolds	Valves	
	EAV210\EAV220 EAV310\EAV320 EAV410\EAV420 EAV610\EAV620 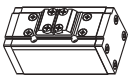	EAV230 EAV330 EAV430 EAV630 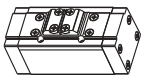
ESV201M ESV301M ESV401M ESV601M	EAV210\EAV220+ESV201M EAV310\EAV320+ESV301M EAV410\EAV420+ESV401M EAV610\EAV620+ESV601M	EAV230+ESV201M EAV330+ESV301M EAV430+ESV401M EAV630+ESV601M
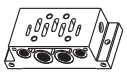	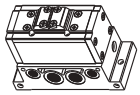	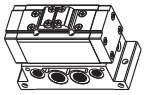
ESV202M+ESV203M ESV302M+ESV303M ESV402M+ESV403M	EAV210\EAV220+ESV202M+ESV203M EAV310\EAV320+ESV302M+ESV303M EAV410\EAV420+ESV402M+ESV403M	EAV230+ESV202M+ESV203M EAV330+ESV302M+ESV303M EAV430+ESV402M+ESV403M
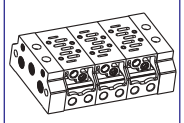	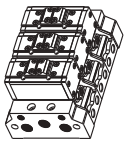	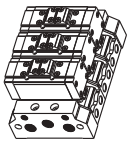
ESV602M+ESV603M +ESV604M	EAV610\EAV620 +ESV602M+ESV603M+ESV604M	EAV630+ESV602M +ESV603M+ESV604M
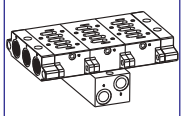	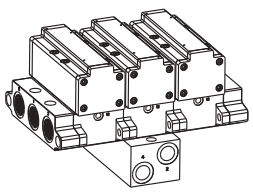	

2. The dimensions of valve with manifolds

EAV210/220+ESV201M

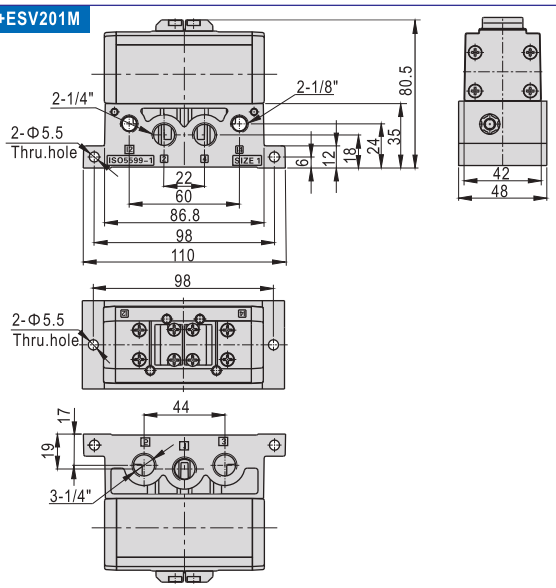

EAV230+ESV201M

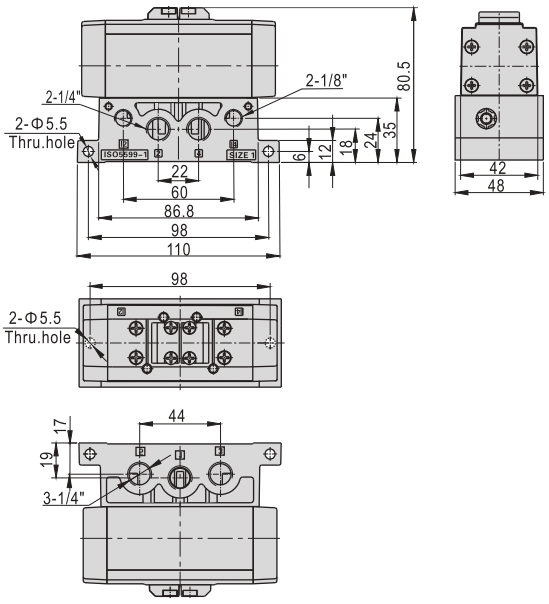

EAV210/220+ESV202M+ESV203M

Note：n means the number of stations.

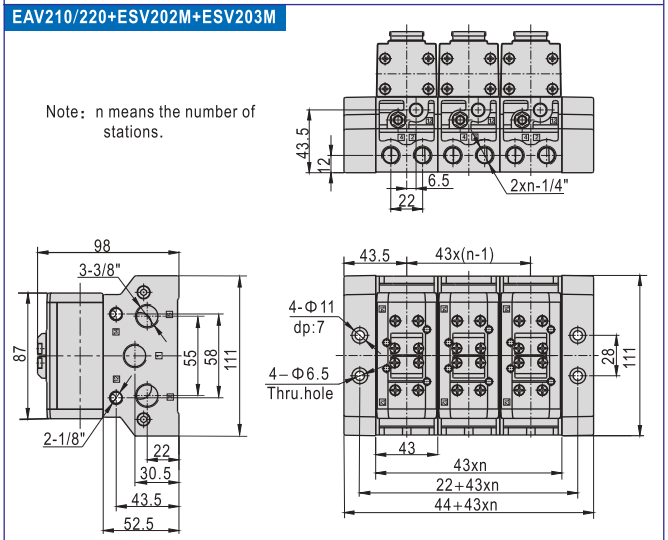

EAV230+ESV202M+ESV203M

Note：n means the number of stations.

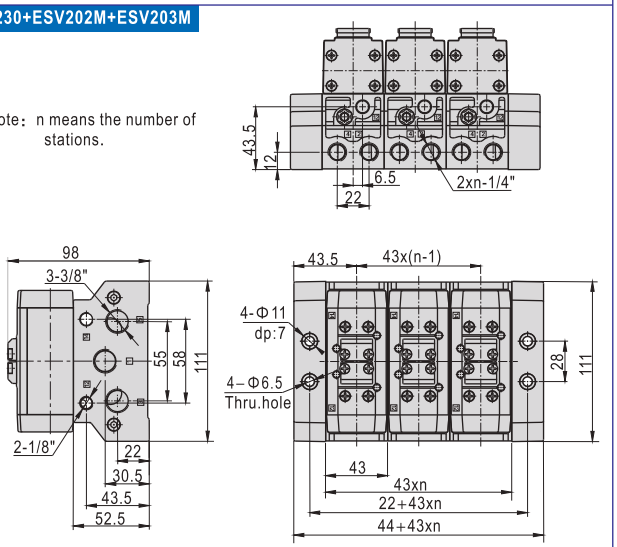

EAV310/320+ESV301M

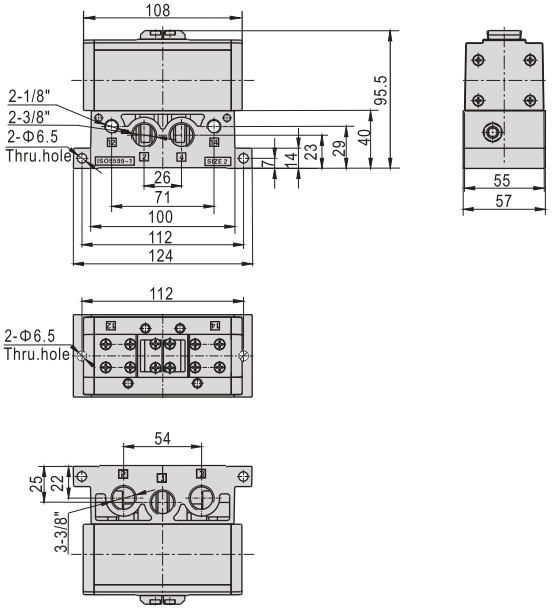

EAV310/320+ESV302M+ESV303M

Note：n means the number of stations.

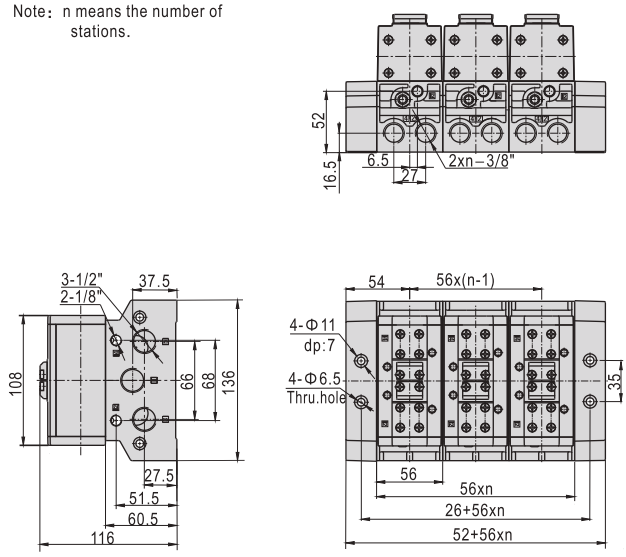

EAV330+ESV301M

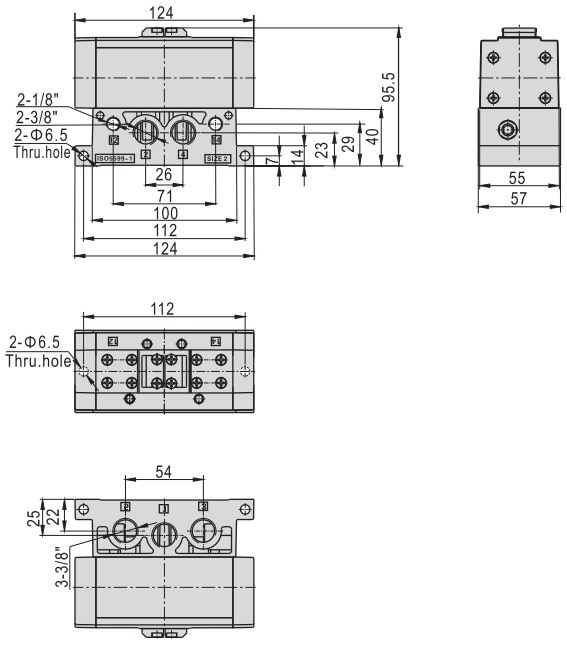

EAV330+ESV302M+ESV303M

Note：n means the number of stations.

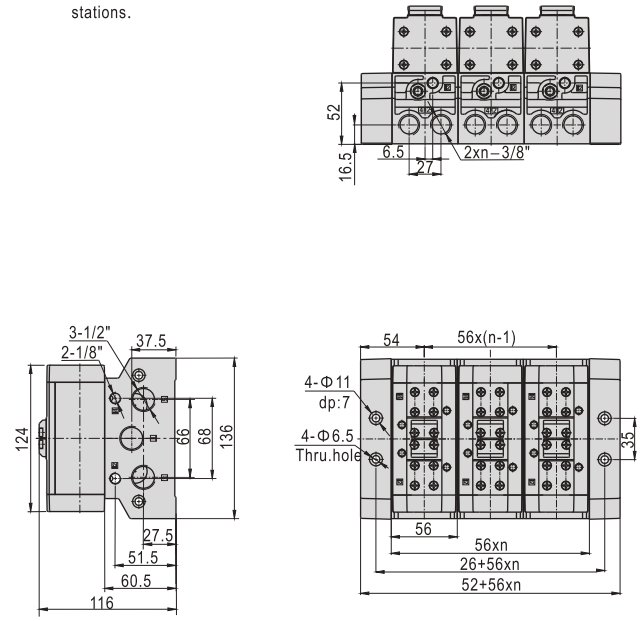

EAV410/420+ESV401M

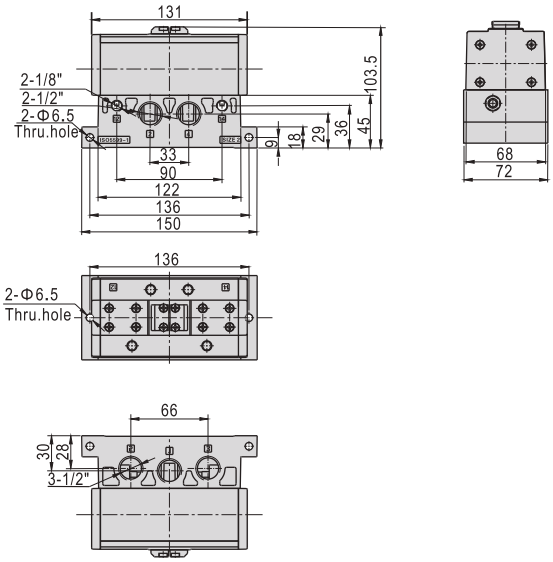

EAV410/420+ESV402M+ESV403M

Note：n means the number of stations.

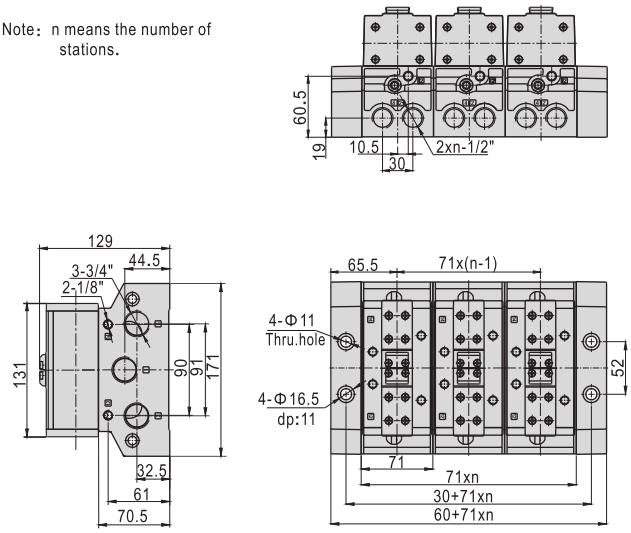

EAV430+ESV401M

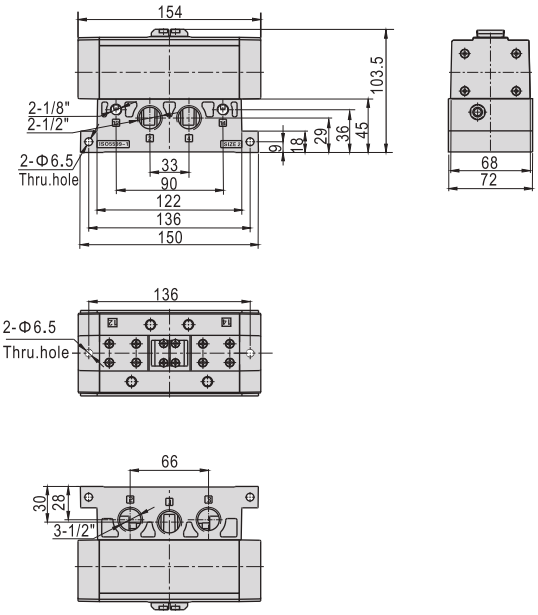

EAV430+ESV402M+ESV403M

Note：n means the number of stations.

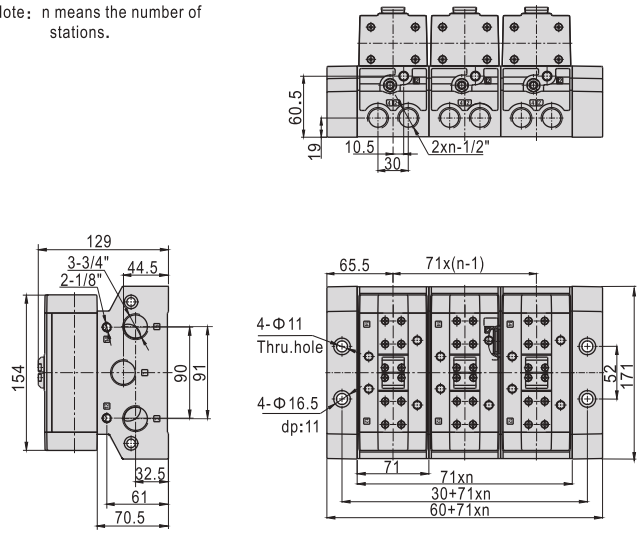

EAV610/620/630+ESV601M

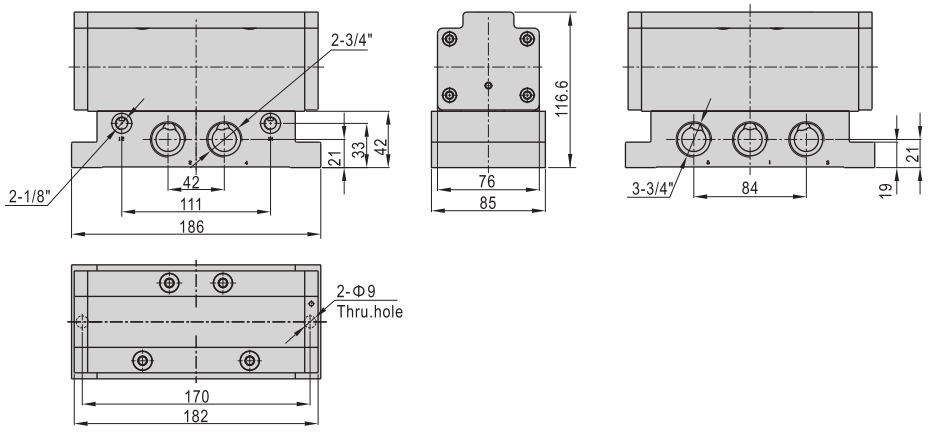

EAV610/620/630+ESV602M+ESV603M+ESV604M

Note：n means the number of stations.

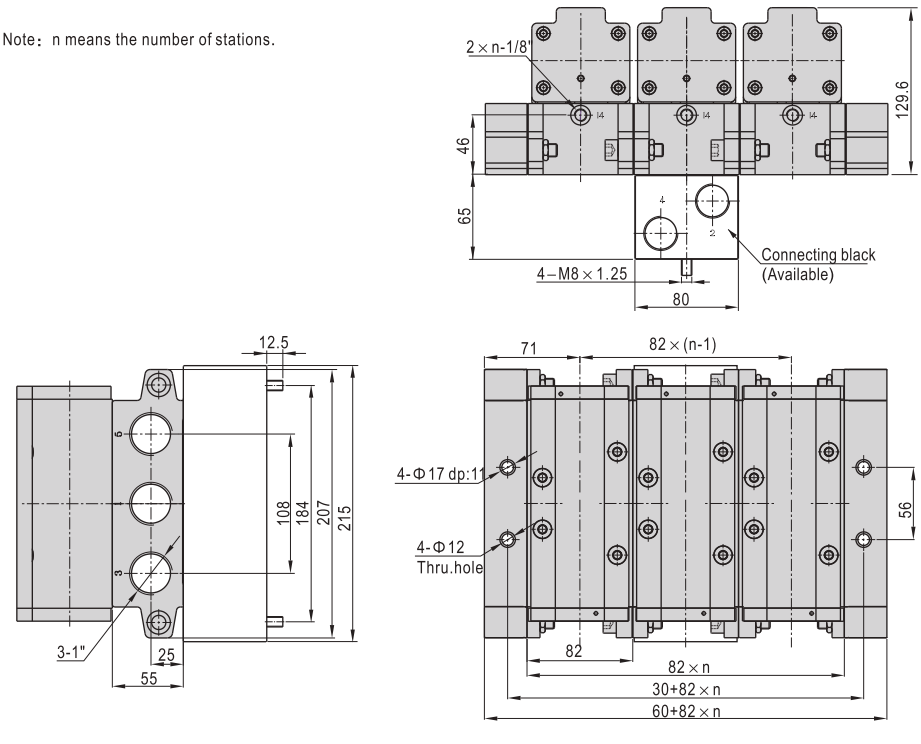

Product series

Hand lever valve: 4H Series 74

Push–pull valve: 3L Series 76

Push–pull valve: 4L Series 77

Hand slide valve: HSV Series 78

Hand lever valve: 4HV, 4HVL Series 79

Control valve: S3 Series 81

Control valve: M3 Series 83

Control valve: M5 Series 85

Control valve: CM3 Series 87

Control valve: ZM3 Series 91

Foot pedal valve: 3F, 3FM, 4F Series 93

Flow control valve: ASC Series 95

Non–return valve: NRV Series 96

Installation and Application

1. Before installing, be sure the valve hasn't been damaged via transportation.
2. It's suggested to use the medium lubricated by 40 μ m filter element. Be aware of the flow direction and port size.
3. Please notice whether the installation condition accords with technical requirements (such as “working pressure” and “scope of application temperature”), then the equipment can be installed and used.
4. Take measure to avoid vibration and frozen.
5. Before using the fittings and tubes make sure they are clean. When connecting to fittings, be sure the PTFE Thread seal tape is used correctly.
6. To keep the dust away, Never forget to install dirt-proof boot in air intake and outlet during dismounting.

Symbol

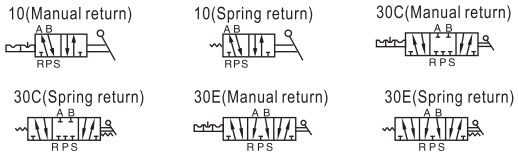

Product feature

1. Manual operation, smooth actuation, and exact and reliable orientation.
2. Sliding column structure has good tightness and light weight and is easy to install and dismount.
3. Internal hole adopts special processing technology which has little attrition friction, long service life.
4. No need to add oil for lubrication.
5. Panel-mounting makes it convenient to install and apply.

Flow chart

Model: 4H210–08

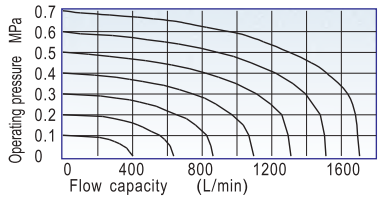

Model: 4H310–10

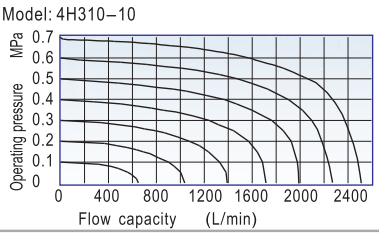

Installation

1. 5/3 way manual return hand lever valve is positioned by steel ball, which is convenient to switch. Please applythe proper force to avoid the position mismatch and misoperation.
2. When installed by panel, disassemble the gasket according to the practical requirement.
3. Below is the installation method for reference.
   Note: Please give your attention on the panel thickness and hole dimension when installed by panel.

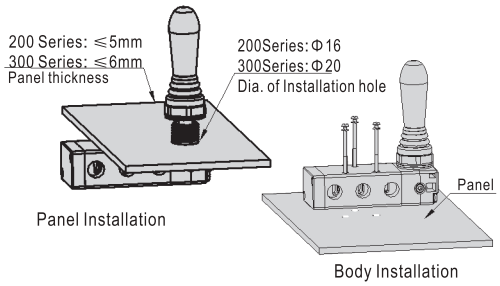

Specification

Model	210–06	230–06	210–08	230–08	310–08	330–08	310–10	330–10
Fluid	Air (to be filtered by 40 μm filter element)							
Operating	Manual control direct acting type)							
Port size①	In=Out=Exhaust=1/8"		In=Out=1/4" Exhaust=1/8"		In=Out =Exhaust=1/4"		In=Out=3/8" Exhaust=1/4"	
Orifice size	14.0mm² (Cv=0.78)	12.0mm² (Cv=0.67)	16.0mm² (Cv=0.89)	12.0mm² (Cv=0.67)	25.0mm² (Cv=1.39)	18.0mm² (Cv=1.00)	30.0mm² (Cv=1.67)	18.0mm² (Cv=1.00)
Valve type	5/2 Way	5/3 Way	5/2 Way	5/3 Way	5/2 Way	5/3 Way	5/2 Way	5/3 Way
Lubrication②	Not required							
Pressure range	0~0.8MPa(0~116psi)							
Proof pressure	1.5MPa(215psi)							
Temperature	-20~70℃							
Material body	Aluminum alloy							
Operating angle	±15°	±8.5°	±15°	±8.5°	±18°	±10°	±18°	±10°

① G thread and NPT thread are available;
② Once lubricated air is used, continue with same medium to optimise valve life span. It is suggested to use ISO VG32 lubricant or the oil with the same grade.

Ordering code

4H 2 30C 08 G

Model
- 4H: Manual return
- 4HA: Spring return

Code
- 2: 200 Series
- 3: 300 Series

Valve type
- 10: 5/2 Way
- 30C: 5/3 Way closed center
- 30E: 5/3 Way exhaust center

Thread type
- G: G
- T: NPT

Port size

Code	Port size
200 Series	06: 1/8"
	08: 1/4"
300 Series	08: 1/4"
	10: 3/8"

Inner structure

4H210

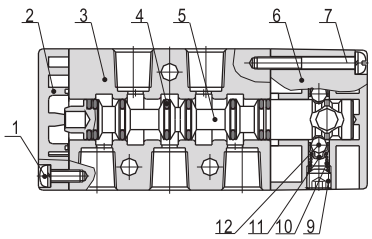

4HA230C

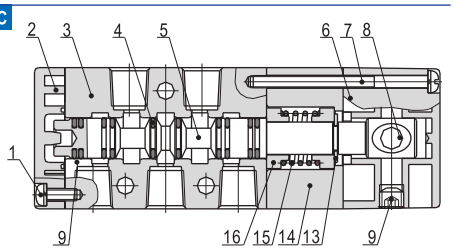

No.	Item
1	Round head screw
2	Bottom cover
3	Body
4	O-ring
5	Spool
6	Top cover
7	Round head cover
8	Axle
9	Stop screw
10	Spring
11	Steel ball jacket
12	Steel ball
13	E clip
14	Side cover
15	Spring
16	Spring holder

Dimensions

4H210\310, 4HA210\310

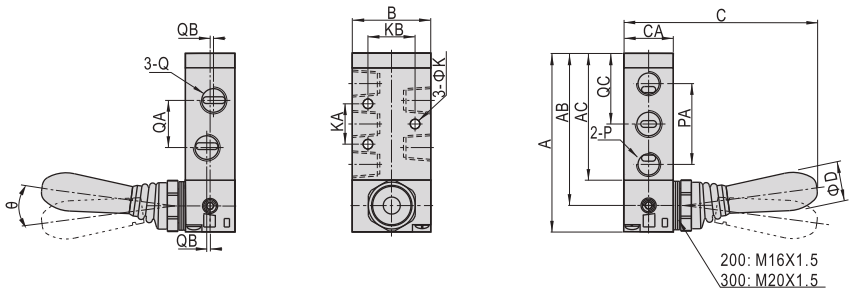

Model\Item	A	AB	AC	B	C	CA	D	K	KA	KB	P	PA	Q	QA	QB	QC	Θ
4H210-06 4HA210-06	81.5	69.5	57.5	35	90	22	18	4.3	20	23.5	1/8"	36	1/8"	18	-	32.5	15
4H210-08 4HA210-08	81.5	69.5	57.5	35	90	22	18	4.3	20	23.5	1/8"	36	1/4"	21	1.5	32.5	15
4H310-08 4HA310-08	101	87	73	40	93.5	27	18	4.3	24	27.5	1/4"	45	1/4"	22	-	40.5	18
4H310-10 4HA310-10	101	87	73	40	93.5	27	18	4.3	24	27.5	1/4"	45	3/8"	24	2	40.5	18

4H230C\330C, 4H230E\330E

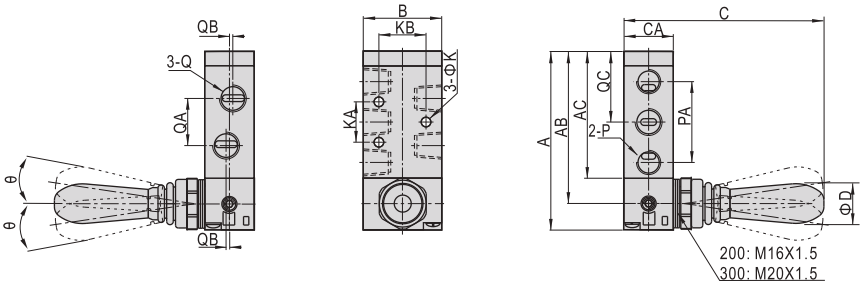

Model\Item	A	AB	AC	B	C	CA	D	K	KA	KB	P	PA	Q	QA	QB	QC	Θ
4H230C-06 4H230E-06	81.5	69.5	57.5	35	90.5	22	18	4.3	20	23.5	1/8"	36	1/8"	18	-	32.5	8.5
4H230C-08 4H230E-08	81.5	69.5	57.5	35	90.5	22	18	4.3	20	23.5	1/8"	36	1/4"	21	1.5	32.5	8.5
4H330C-08 4H330E-08	101	87	73	40	94	27	18	4.3	24	27.5	1/4"	45	1/4"	22	-	40.5	10
4H330C-10 4H330E-10	101	87	73	40	94	27	18	4.3	24	27.5	1/4"	45	3/8"	24	2	40.5	10

4HA230C\330C, 4HA230E\330E

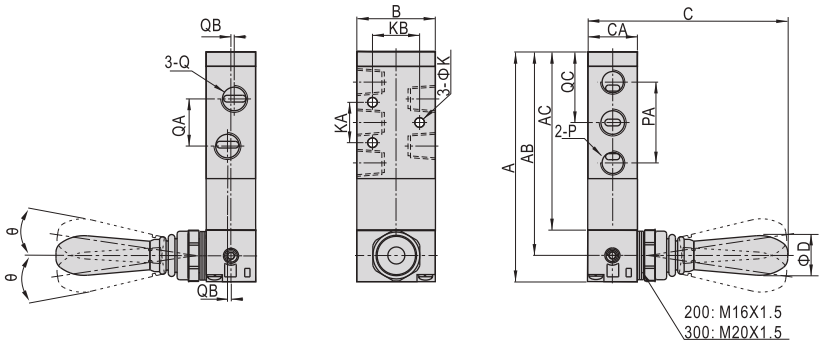

Model\Item	A	AB	AC	B	C	CA	D	K	KA	KB	P	PA	Q	QA	QB	QC	Θ
4HA230C-06 4HA230E-06	100.5	88.5	76.5	35	90.5	22	18	4.3	20	23.5	1/8"	36	1/8"	18	-	32.5	8.5
4HA230C-08 4HA230E-08	100.5	88.5	76.5	35	90.5	22	18	4.3	20	23.5	1/8"	36	1/4"	21	1.5	32.5	8.5
4HA330C-08 4HA330E-08	120	106	92	40	94	27	18	4.3	24	27.5	1/4"	45	1/4"	22	-	40.5	10
4HA330C-10 4HA330E-10	120	106	92	40	94	27	18	4.3	24	27.5	1/4"	45	3/8"	24	2	40.5	10

Specification

Model	3L110–06	3L210–06	3L210–08	3L310–08	3L310–10
Fluid	Air (to be filtered by 40 μm filter element)				
Operating	Manual control direct acting type)				
Port size①	1/8"		1/4"		3/8"
Orifice size	12.0mm² (Cv=0.67)	14.0mm² (Cv=0.78)	16.0mm² (Cv=0.89)	25.0mm² (Cv=1.39)	30.0mm² (Cv=1.67)
Valve type	3/2 Way				
Lubrication②	Not required				
Pressure range	0~0.8MPa(0~116psi)				
Proof pressure	1.5MPa(215psi)				
Temperature	-20~70℃				
Material body	Aluminum alloy				

① G thread and NPT thread are available.
② Once lubricated air is used, continue with same medium to optimise valve life span. It is suggested to use ISO VG32 lubricant or the oil with the same grade.

Symbol

Flow chart

Model: 3L110–06

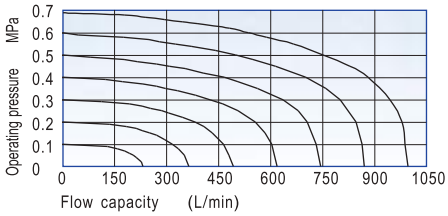

Model: 3L210–08

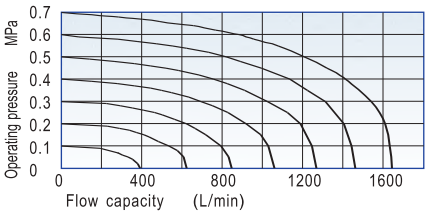

Model: 3L310–10

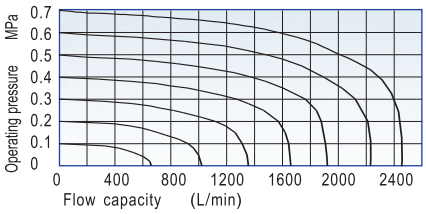

Inner structure

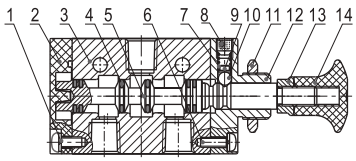

No.	Item	No.	Item	No.	Item
1	Round head screw	6	Round head screw	11	Hexagon nut
2	Bottom cover	7	Spring	12	Top cover
3	Body	8	Stop screw	13	Safety nut
4	O-ring	9	Spring base	14	Hand grip
5	Spool	10	Steel ball		

Ordering code

3L 2 10 08 G

Model
3L: 3 port 2 position push–pull valve

Code

1: 100 Series
2: 200 Series
3: 300 Series

Valve type
10: 2 position

Thread type

G: G
T: NPT

Port size

Code	Port size
100 Series	06: 1/8"
200 Series	06: 1/8"
	08: 1/4"
300 Series	08: 1/4"
	10: 3/8"

Dimensions

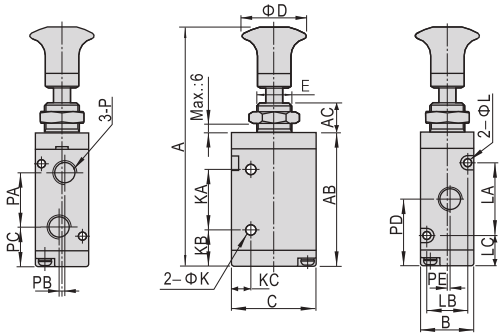

Item\Type	3L11006	3L21006	3L21008	3L31008	3L31010
A	87	98	98	106.5	106.5
AB	47.8	57.8	57.8	66.5	66.5
AC	10	10	10	10	10
B	18	22	22	27	27
C	27	35	35	40	40
D	25	25	25	25	25
E	M12X0.75	M14X1.0	M14X1.0	M16X1.0	M16X1.0
K	3.1	4.3	4.3	4.3	4.3
KA	21	25	25	30	30
KB	13	16	16	18	18
KC	7.7	8	8	10	10
L	3.3	3.3	3.3	4.3	4.3
LA	19	30	30	35	35
LB	13	17	17	20	20
LC	14	13.5	13.5	15.5	15.5
P	1/8"	1/8"	1/4"	1/4"	3/8"
PA	16	22.5	22.5	24	24
PB	2	0	0	0	0
PC	15.5	17.5	17.5	21	21
PD	24.5	28.5	28.5	33	33
PE	1	0	1.5	0	2

Specification

Model	4L110–06	4L210–06	4L210–08	4L310–08	4L310–10
Fluid	Air (to be filtered by 40 μm filter element)				
Operating	Manual control direct acting type)				
Port size①	1/8"		1/4"		3/8"
Orifice size	12.0mm² (Cv=0.67)	14.0mm² (Cv=0.78)	16.0mm² (Cv=0.89)	25.0mm² (Cv=1.39)	30.0mm² (Cv=1.67)
Valve type	5/2 Way				
Lubrication②	Not required				
Pressure range	0~0.8MPa(0~116psi)				
Proof pressure	1.5MPa(215psi)				
Temperature	-20~70℃				
Material body	Aluminum alloy				

① G thread and NPT thread are available;
② Once lubricated air is used, continue with same medium to optimise valve life span. It is suggested to use ISO VG32 lubricant or the oil with the same grade.

Symbol

Ordering code

4L 2 10 08 G

- **Model**: 4L: 5 port 2 position push–pull valve
- **Code**: 1: 100 Series; 2: 200 Series; 3: 300 Series
- **Valve type**: 10: 2 position
- **Port size**

Code	Port size
100 Series	06: 1/8"
200 Series	06: 1/8"
	08: 1/4"
300 Series	08: 1/4"
	10: 3/8"

- **Thread type**: G: G; T: NPT

Flow chart

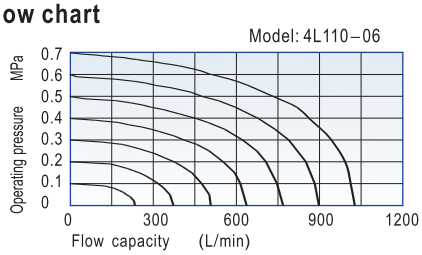

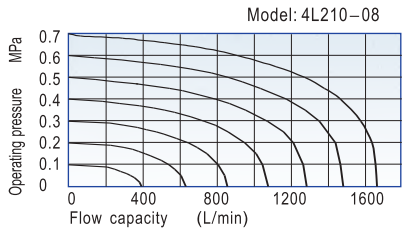

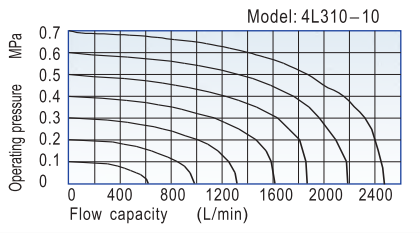

Inner structure

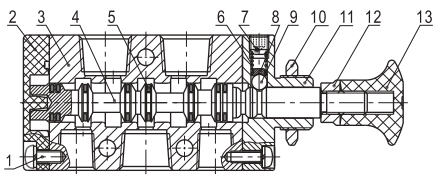

No.	Item	No.	Item	No.	Item
1	Round head screw	6	Spring	11	Top cover
2	Bottom cover	7	Stop screw	12	Safety nut
3	Body	8	Spring base	13	Hand grip
4	Spool	9	Steel ball		
5	O-ring	10	Hexagon nut		

Dimensions

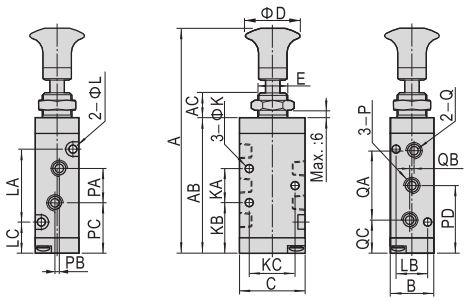

Item\Type	4L11006	4L21006	4L21008	4L31008	4L31010
A	98	106	106	121.5	121.5
AB	58.8	65.8	65.8	81	81
AC	10	10	10	10	10
B	18	22	22	27	27
C	27	35	35	40	40
D	25	25	25	25	25
E	M12×0.75	M14×1.0	M14×1.0	M16×1.0	M16×1.0
K	3.3	4.3	4.3	4.3	4.3
KA	14	20	20	24	24
KB	22	22.5	22.5	28.5	28.5
KC	19	23.5	23.5	27.5	27.5
L	3.3	3.3	3.3	4.3	4.3
LA	30	38	38	50	50
LB	13	17	17	20	20
LC	14	13.5	13.5	15.5	15.5
P	1/8"	1/8"	1/8"	1/4"	1/4"
PA	16	18	21	22	24
PB	3	0	3	0	4
PC	21	23.5	22	29.5	28.5
PD	29	32.5	32.5	40.5	40.5
Q	1/8"	1/8"	1/4"	1/4"	3/8"
QA	28	36	36	45	45
QB	2	0	0	0	0
QC	15	14.5	14.5	18	18

HSV

Specification

Model	HSV06	HSV08	HSV10	HSV15	HSV20	HSV25
Fluid	Air (to be filtered by 40 μm filter element)					
Operating	Manual control direct acting type)					
Port size①	1/8"	1/4"	3/8"	1/2"	3/4"	1"
Orifice size	23.0mm² (Cv=1.28)	40.0mm² (Cv=2.20)	62.0mm² (Cv=3.50)	140.0mm² (Cv=7.80)	250.0mm² (Cv=13.80)	392.0mm² (Cv=21.78)
Valve type	3/2 Way					
Lubrication	Not required					
Pressure range	0~1.0MPa(0~145psi)					
Proof pressure	1.5MPa(215psi)					
Temperature	-20~70℃					
Material body	Aluminum alloy					

① G thread and NPT thread are available.

Symbol

Ordering code

HSV 08 SS G

- **Model**: HSV: Hand slide valve
- **Port size**: 06: 1/8"; 08: 1/4"; 10: 3/8"; 15: 1/2"; 20: 3/4"; 25: 1"
- **Dovt thread**: Blank: Standard; SS: Double male thread; FF: Double female thread; SF: Male and female thread
- **Thread type**: G: G; T: NPT

Product feature

1. There are several ways of internal and external thread connection, suitable for the application in different pipeline systems.
2. The direction-change slides smoothly and has good hand feeling.
3. There is large effective circulating area.
4. The valve spool surface is treated with acid washing passivation, and the surface of valve body is oxidized to keep the color for a long time.

Inner structure

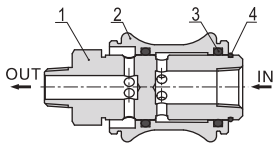

No.	Item
1	Valve plug
2	Body
3	O -ring
4	Clip

Dimensions

Standard

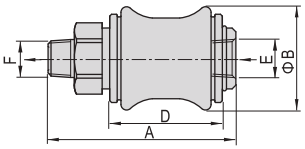

Double female thread(FF)

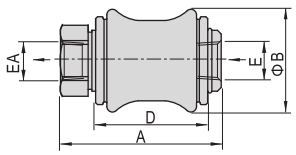

Male and female thread(SF)

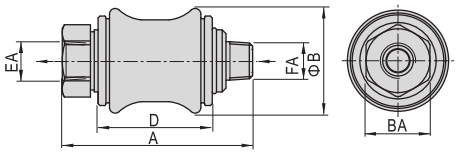

Double male thread (SS)

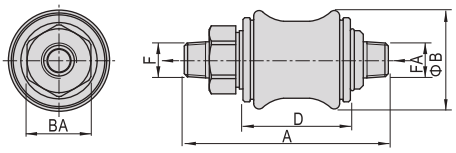

Type\Item	A				B	BA	D	E	EA	F	FA
	Standard	Double female thread	Male and female thread	Double male thread							
HSV06	50	43	50	57	27.5	17	30	1/8"	1/8"	1/8"	1/8"
HSV08	58	47	58	69	30	19	32.5	1/4"	1/4"	1/4"	1/4"
HSV10	68.5	55.5	68.5	81.5	35.5	22	39	3/8"	3/8"	3/8"	3/8"
HSV15	85.5	70.5	85.5	100.5	44	30	50	1/2"	1/2"	1/2"	1/2"
HSV20	96.5	79.5	96.5	113.5	53.5	36	58	3/4"	3/4"	3/4"	3/4"
HSV25	114.5	96.5	114.5	132.5	65.5	44	70	1"	1"	1"	1"

Symbol

4/2 way

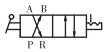

4/2 way with lock

4/3 way closed center

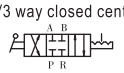

4/3 way closed center type with lock

Product feature

1. The direction-change turns lightly with good hand feeling and exact orientation.
2. Large effective circulating area leads to little pressure loss.
3. Panel and body installation are optional. The panel installation can be attached with installing nut.

Flow chart

Model:2 Series

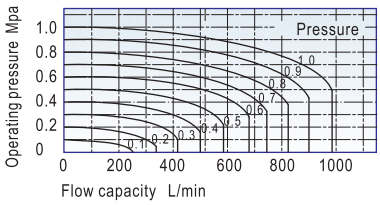

Model:3 Series

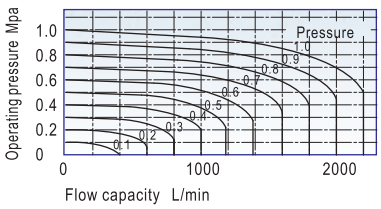

Model:4 Series

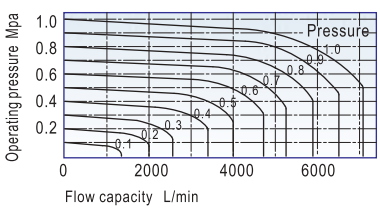

Specification

Model	4HV2□□ −06(L)	4HV2□□ −08(L)	4HV3□□ −08(L)	4HV3□□ −10(L)	4HV4□□ −15(L)	4HV4□□ −20(L)
Fluid	Air (to be filtered by 40 μ m filter element)					
Operating	Manual control direct acting type)					
Port size①	1/8"	1/4"	1/4"	3/8"	1/2"	3/4"
Orifice size	14.0mm² (Cv=0.78)	16.0mm² (Cv=0.89)	30.0mm² (Cv=1.67)	33.0mm² (Cv=1.83)	88.0mm² (Cv=4.89)	95.0mm² (Cv=5.27)
Valve type	4/2 Way 4/3 Way					
Lubrication	Not required					
Pressure range	0~1.0MPa(0~145psi)					
Proof pressure	1.5MPa(215psi)					
Temperature	−20~70℃					
Operating angle	90°(4/3 Way:45°)					

① G thread and NPT thread are available.

Ordering code

4HV 2 30 06 S L G

- **Model**: 4HV: Hand lever valve
- **Code**: 2: 200 Series; 3: 300 Series; 4: 400 Series
- **Valve type**: 10: 4 port 2 position; 30: 4 port 3 position ①
- **Port size**

Code	Port size
200 Series	06: 1/8"
	08: 1/4"
300 Series	08: 1/4"
	10: 3/8"
400 Series	15: 1/2"
	20: 3/4"

- **Thread type**: G: G; T: NPT
- **Note**: Blank: Without lock; L: With lock
- **Installation**: Blank: Body installation; S: Panel installation ②

① 4 port 3 position only has closed center type.
② The panel installation can be attached with installing nut.

Inner structure

4HVL

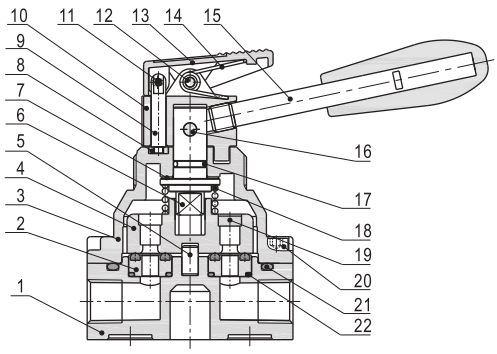

No.	Item	No.	Item
1	Bogy	12	Pin one
2	Seal base	13	Front cover
3	Valve cover	14	Spring
4	Valve plug	15	Handle
5	Column pin	16	Pin two
6	Shaft	17	Shaft O-ring
7	Washer	18	Spring
8	Fixing plate	19	Iron plate
9	Lock pin	20	Fixing screw
10	Valve cap	21	Body O-ring
11	Spring pin	22	Seal base O-ring

Dimensions

4HV Series

Body installation

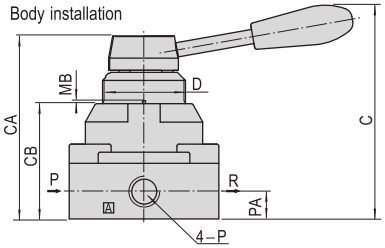

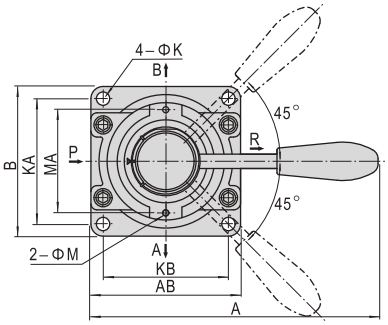

Panel installation

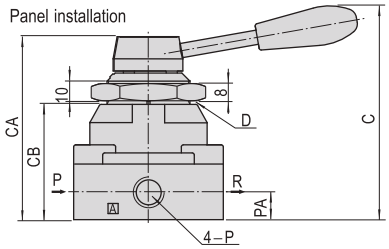

Model\Item	A	AB	B	C	CA	CB	D	K	KA	KB	M	MA	MB	P	PA
4HV2□□–06	120	62	62	92.5	73	45	M34×1.5	5.5	49	49	3	40	1.5	1/8"	11.5
4HV2□□–08	120	62	62	92.5	73	45	M34×1.5	5.5	49	49	3	40	1.5	1/4"	11.5
4HV3□□–08	140	74	74	104	88.5	56	M40×1.5	6.5	62	62	3	51	1.5	1/4"	13.5
4HV3□□–10	140	74	74	104	88.5	56	M40×1.5	6.5	62	62	3	51	1.5	3/8"	13.5
4HV4□□–15	160	94	102	128	110	72	M52×1.5	6.5	89	81	3	64	2	1/2"	18
4HV4□□–20	160	94	102	128	110	72	M52×1.5	6.5	89	81	3	64	2	3/4"	18

4HVL Series

Body installation

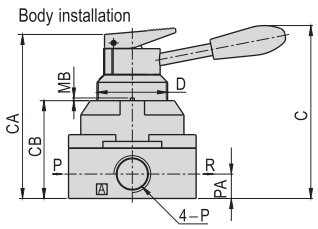

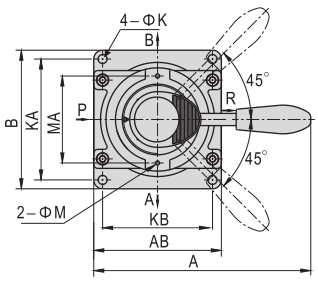

Panel installation

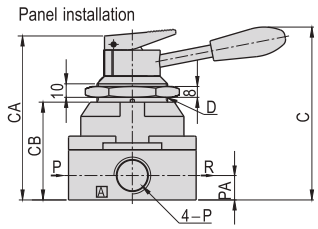

Model\Item	A	AB	B	C	CA	CB	D	K	KA	KB	M	MA	MB	P	PA
4HV2□□–06L	120	62	62	92.5	84	45	M34×1.5	5.5	49	49	3	40	1.5	1/8"	11.5
4HV2□□–08L	120	62	62	92.5	84	45	M34×1.5	5.5	49	49	3	40	1.5	1/4"	11.5
4HV3□□–08L	140	74	74	104	99	56	M40×1.5	6.5	62	62	3	51	1.5	1/4"	13.5
4HV3□□–10L	140	74	74	104	99	56	M40×1.5	6.5	62	62	3	51	1.5	3/8"	13.5
4HV4□□–15L	160	94	102	128	121	72	M52×1.5	6.5	89	81	3	64	2	1/2"	18
4HV4□□–20L	160	94	102	128	121	72	M52×1.5	6.5	89	81	3	64	2	3/4"	18

Specification

Model	S3B	S3C	S3D	S3V	S3R	S3L	S3Y	S3PM	S3PP	S3PF	S3PL	S3HS
Fluid	Air (to be filtered by 40 μm filter element)											
Operating	External control direct acting type											
Port size①	05:M5; 06:1/8"; 08:1/4"											
Orifice size	05:2.5 mm² (Cv=0.14); 06:8.0mm² (Cv=0.45); 08:12.0mm² (Cv=0.67)											
Valve type	3/2 Way											
Lubrication②	Not required											
Pressure range	0~0.8MPa(0~114psi)											
Proof pressure	1.5MPa(215psi)											
Temperature	–20~70 ℃											
Material body	Aluminum alloy											

① G thread and NPT thread are available.

② Once lubricated air is used, continue with same medium to optimise valve life span. It is suggested to use ISO VG32 lubricant or the oil with the same grade.

Ordering code

S3 PM 06 R G

Valve's type
S3: S type 3/2 Way

Model

B: Basic type
C: Long handle type
D: Short handle type
Y: Lever type
R: Roller type
L: Roller with free return type
V: Vertical type
PL: Latching type
PP: Protruding type
PF: Flat type
PM: Mushroom type
HS: Selector type

Thread type

Port size	Thread type
M5	Not code
1/8"	G: G
1/4"	T: NPT

Button color

Model	Button color
PL	R: Red
PP, PF PM, HS	R: Red
	G: Green
	B: Black
Others	Not code

Port size

05: M5
06: 1/8"
08: 1/4"

Symbol

Product feature

1. The external force required by changing the direction of the series of S3B, S3R, S3L and S3V is provided by external mechanism, which can be used for position test or limit switch.
2. The series of S3PF, S3PM, S3PP, S3PL, S3Y, S3HS, S3C and S3D are operated manually, owning control joints with several structure forms and suitable for application under different conditions.
3. Shut-off structure has good tightness and is sensitive in direction changing and lubricant is not necessary.
4. Multi-mounting makes it convenient to install and apply.
5. The control joints of series of S3C, S3D, S3Y, S3R and S3L are made of metal which has long service life and more reliable and steady performance.

Flow chart

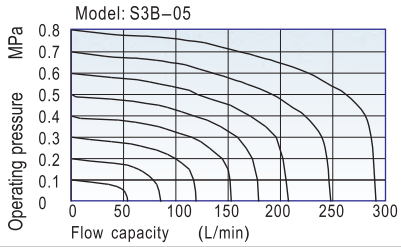

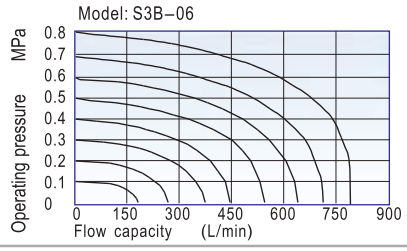

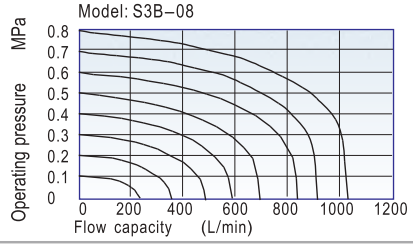

Inner structure

S3PM type

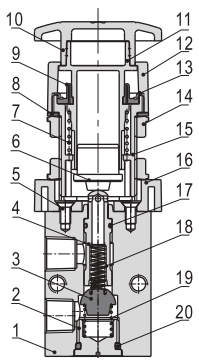

No.	Item	No.	Item
1	Body	11	Main body of button
2	Bottom cover	12	Top cover
3	Stopper plug	13	Button ring
4	Valve core	14	Clamping nut
5	Screw	15	Button body
6	Button pressing buckle	16	Connector
7	Spring	17	O-ring
8	Clamping gasket	18	Spring
9	Dust cover	19	Spring
10	Button cap	20	O-ring

Reversal stroke

Unit: mm

Type	Spool stroke	Button stroke	Type	Spool stroke	Roller(handle) stroke
S3B	2.4~4.0	–	S3R	2.4~3.4	5.5~7.8
S3PF	2.4~4.0	3.8~5.4	S3L	2.4~3.4	6.0~8.6
S3PP	2.4~4.0	3.8~5.4	S3V	2.4~3.8	3.4~4.8
S3PM	2.4~4.0	3.8~5.4	S3C	2.4~3.8	14.4~18.4
S3PL	2.4~4.0	5.9~7.5	S3D	2.4~3.8	7.4~9.4
S3HS	2.4~4.0	5.1~6.7			

S3

Assemble chart

Fixation way of body	Fixation way of panel
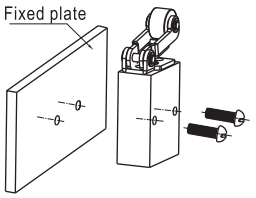	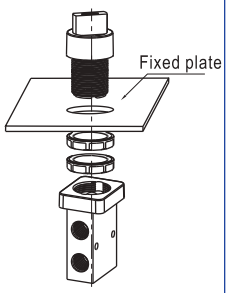

Attentions

1) The control set is made of engineering plastic which only allows manual operation and switching valves through metal impact is forbidden.
2) The series of S3B, S3C, S3D, S3PM, S3PF and S3PP get the function of automatic restoration. The hand valves of S3Y, S3HS and S3PL are in the type of manual restoration. S3PL will be restored by turning the revolve button after being pressed into orientation.
3) Pay attention to the reversing stroke. The reversing stroke can not surpass its stoke stipulated in stroke control table when the direction-change of the valve is forced by any external forces,otherwise it will cause the damage of the valve.
4) The S3L can only switch the valve in single direction (impact from right to left). The impact from the other direction is invalid (from left to right).
5) Control joint combination can be ordered individually. Please refer to the table on the right for order details.

Dimensions of body(S3B)

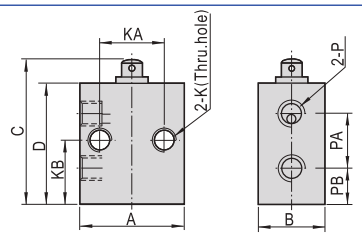

Type\Item	A	B	C	D	K	KA	KB	P	PA	PB
05	26	16.5	36	30	M5x0.8	16	15	M5x0.8	13	9
06	30	16.5	47	41	M5x0.8	23	20.5	1/8"	17.5	11.5
08	34	17.5	52	46	M5x0.8	24	22.5	1/4"	21	12

Dimension

Model	C Long handle type		D Short handle type		Y Lever type	
How to order	Ordering code	Type	Ordering code	Type	Ordering code	Type
	M3C210-P13A	M3C210 Long handle type control set	M3D210-P13A	M3D210 Short handle type control set	M3Y210-P13A	M3Y210 Lever type control set
Applicable products	S3C05, S3C06, S3C08		S3D05, S3D06, S3D08		S3Y05, S3Y06, S3Y08	
Dimensions	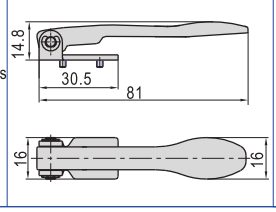		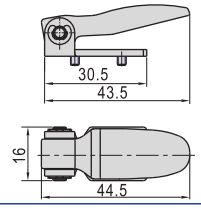		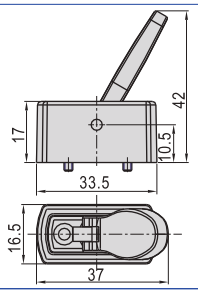	

Model	R Roller type		L Roller with free return type		V Vertical type	
How to order	Ordering code	Type	Ordering code	Type	Ordering code	Type
	M3R210-P14A	M3R210 Roller type control set	M3L210-P14A	M3L210 Roller with free return type control set	S3V05(06, 08)-P14A	S3V05(06. 08) Vertical type control set
Applicable products	S3R05, S3R06, S3R08		S3L05, S3L06, S3L08		S3V05, S3V06, S3V08	
Dimensions	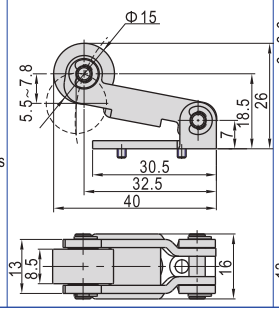		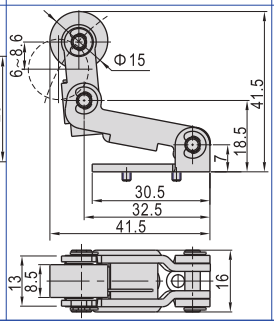		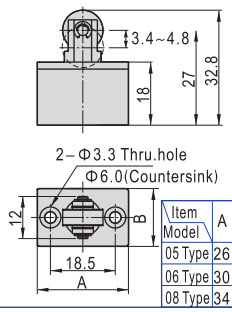	

Item / Model	A	B
05 Type	26	16.5
06 Type	30	16.5
08 Type	34	17.5

Model	PP Protruding type		PM Mushroom type		PL Latching type (only red)	
How to order	Ordering code	Type	Ordering code	Type	Ordering code	Type
	S3PP05-P11A	S3PP protruding type control set (Green)	S3PM05-P11A	S3PM mushroom type control set (Green)	S3PL05-P12A	S3PL Latching type control set (Red)
	S3PP05-P12A	S3PP protruding type control set (Red)	S3PM05-P12A	S3PM mushroom type control set (Red)		
	S3PP05-P13A	S3PP protruding type control set (Black)	S3PM05-P13A	S3PM mushroom type control set (Black)		
Applicable products	S3PP05, S3PP06, S3PP08		S3PM05, S3PM06, S3PM08		S3PL05, S3PL06, S3PL08	
Dimensions	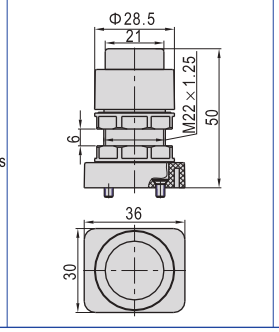		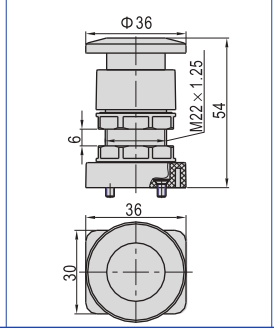		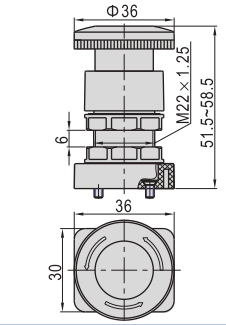	

Model	PF Flat type		HS Selector type	
How to order	Ordering code	Type	Ordering code	Type
	S3PF05-P11A	S3PF flat type control set (Green)	S3HS05-P11A	S3HS selector type control set (Green)
	S3PF05-P12A	S3PF flat type control set (Red)	S3HS05-P12A	S3HS selector type control set (Red)
	S3PF05-P13A	S3PF flat type control set (Black)	S3HS05-P13A	S3HS selector type control set (Black)
Applicable products	S3PF05, S3PF06, S3PF08		S3HS05, S3HS06, S3HS08	
Dimensions	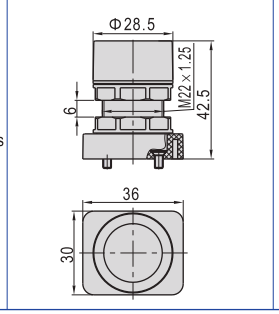		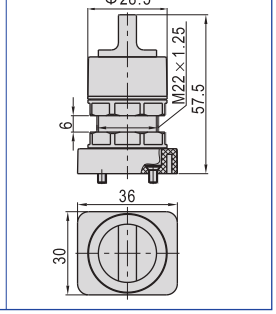	

Specification

Model		S3B	S3C	S3D	S3R	S3L	S3Y	S3PM	S3PP	S3PF	S3PL	S3HS
Fluid		Air (to be filtered by 40 μm filter element)										
Operating		External control direct acting type										
Port size①		05:M5; 06:1/8"; 08:1/4"										
Orifice size	Mini type	05:2.5 mm^2 (Cv=0.14)										
	110	06:8.0mm^2 (Cv=0.45)										
	210	06:9.0mm^2 (Cv=0.50); 08:12.0mm^2 (Cv=0.67)										
Valve type		3/2 Way										
Lubrication②		Not required										
Pressure range		0~1.0MPa(0~145psi)										
Proof pressure		1.5MPa(215psi)										
Temperature		–20~70 ℃										
Material body		Aluminum alloy										

① G thread and NPT thread are available.

② Once lubricated air is used, continue with same medium to optimise valve life span. It is suggested to use ISO VG32 lubricant or the oil with the same grade.

Ordering code

Common type: M3 PM 210 06 R G

- **Valve's type**: M3: M type 3/2 Way
- **Model**: B: Basic type; C: Long handle type; D: Short handle type; Y: Lever typer; R: Roller type; L: Roller with free return type; PL: Latching type; PP: Protruding type; PF: Flat type; PM: Mushroom type; HS: Selector type
- **Code**: 110: 100 Series single control; 210: 200 Series single control
- **Port size**

Code	Port size
100 Series	06: 1/8"
200 Series	06: 1/8"
	08: 1/4"

- **Button color**

Model	Button color
PL	R: Red
PP, PF PM, HS	R: Red
	G: Green
	B: Black
Others	Not code

- **Thread type**: G: G; T: NPT

Mini type: M3 R 05

- **Valve's type**: M3: M type 3/2 Way
- **Port size**: 05: M5
- **Model**: B: Basic type; R: Roller type; L: Roller with free return type

Symbol

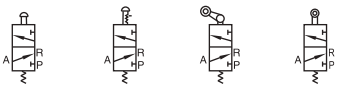

Product feature

1. Exhaust outlet locates over the (body), which is convenient to install muffler to decrease noise and pollution.
2. The external force required by direction-change of series of M3B, M3R and M3L is provided by external mechanism,which can be used for position test or [stroke switch] limit switch.
3. M3C, M3D, M3Y, M3PF, M3PM, M3PP, M3PL and M3HS are operated manually, owning control joints with several structure forms and suitable for application under different conditions.
4. It is in sliding column structure that the control force is not influenced by working pressure (that is, there is no back pressure effect); internal circle is sealed with good tightness and the direction-change is sensitive.
5. No need to add oil for lubrication.
6. Multi-mounting makes it convenient to install and apply;
7. The control joints of series of M3C, M3D, M3Y, M3R, and M3L are made of metal which has long service life and more reliable and steady performance.

Flow chart

Model: M3B–05

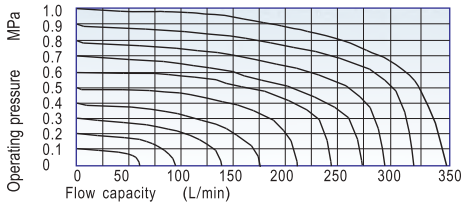

Model: M3B110–06

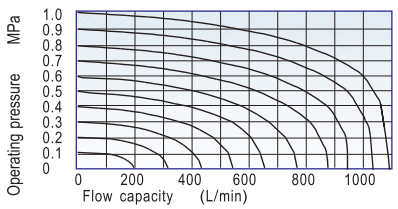

Model: M3B210–06

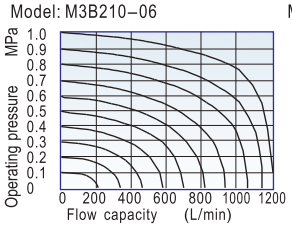

Model: M3B210–08

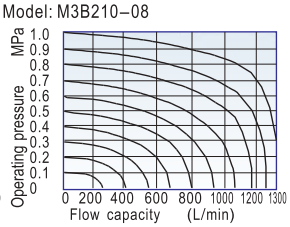

Inner structure

M3R210

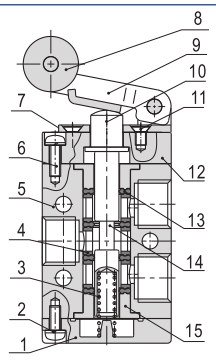

No.	Item	No.	Item
1	Botton cover	9	Axle
2	Screw	10	Rotating block
3	Spring	11	Screw
4	Spacer	12	Fore cover
5	Body	13	Piston O-ring
6	Screw	14	Spool
7	Roller holder	15	Positioning block
8	Roller		

Reversal stroke

Unit:mm

Common type						Mini type		
Type	Spool stroke	Button stroke	Type	Spool stroke	Roller(handle) stroke	Type	Spool stroke	Roller stroke
M3B	2.0~3.3	–	M3R	2.0~3.0	4.6~6.8	M3B05	2.0~3.3	–
M3PF	2.0~3.3	3.8~5.1	M3L	2.0~3.0	5.0~7.8	M3R05	2.0~3.0	6.0~8.5
M3PP	2.0~3.3	3.8~5.1	M3C	2.0~3.0	11.0~16.0	M3L05	2.0~3.0	7.0~10.0
M3PM	2.0~3.3	3.8~5.1	M3D	2.0~3.0	5.5~8.0			
M3PL	2.0~3.3	5.9~7.2						
M3HS	2.0~3.3	5.1~6.4						

M3

Assemble chart

Fixation way of body

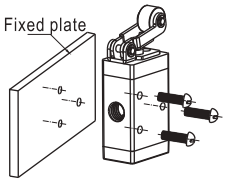

Fixation way of panel

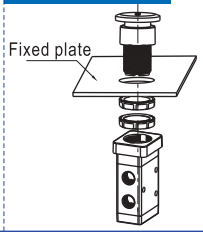

Attentions

1) The control set is made of engineering plastic which only allows manual operation and switching valves through metal impact is forbidden.
2) The series of M3B, M3C, M3D, M3PM, M3PF and M3PP get the function of automatic restoration. The hand valves of M3Y, M3HS and M3PL are in the type of manual restoration. M3PL will be restored by turning the revolve button after being pressed into orientation.
3) Pay attention to the reversing stroke. The reversing stroke can not surpass its stroke stipulated in stroke control table when the direction-change of the valve is forced by any external forces,otherwise it will cause the damage of the valve.
4) The M3L can only switch the valve in single direction (impact from right to left). The impact from the other direction is invalid (from left to right).
5) Control joint combination can be ordered individually. Please refer to the table on the right for order details.

Dimensions

Common type

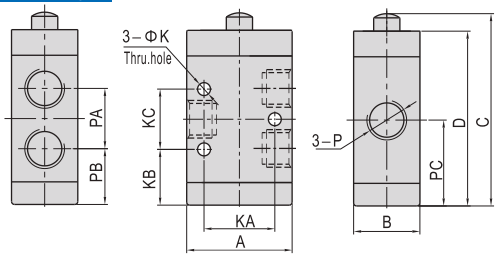

Item\Type	M3B110	M3B210	Item\Type	M3B110	M3B210
A	27	35	KB	15.5	18.5
B	18	22	KC	16	20
C	52	63.8	P	06:1/8"	06:1/8"\08:1/4"
D	46.5	58	PA	16	20
K	3.3	4.3	PB	15.5	18.5
KA	18	23.5	PC	23.5	28.5

Mini type

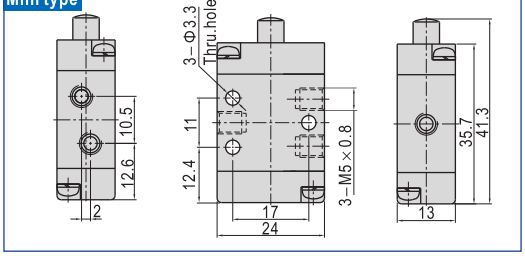

Mini control set dimensions

Model	M3R05 Model		M3L05 Model	
How to order	Ordering code	Type	Ordering code	Type
	M3R05−P14A	M3R05 Roller type control set	M3L05−P14A	M3L05 Roller with free return type control set
Applicable products	M3R05		M3L05	

Dimensions

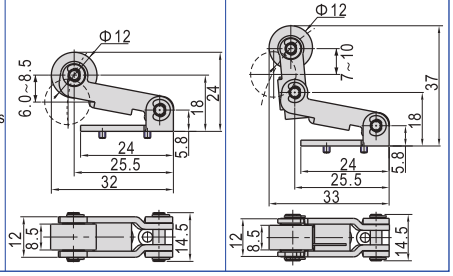

Control set dimensions

Model	C Long handle type		D Short handle type		Y Lever type	
How to order	Ordering code	Type	Ordering code	Type	Ordering code	Type
	M3C210−P13A	M3C210 Long handle type control set	M3D210−P13A	M3D210 Short handle type control set	M3Y210−P13A	M3Y210 Lever type control set
Applicable products	M3C110, M3C210		M3D110, M3D210		M3Y110, M3Y210	

Dimensions

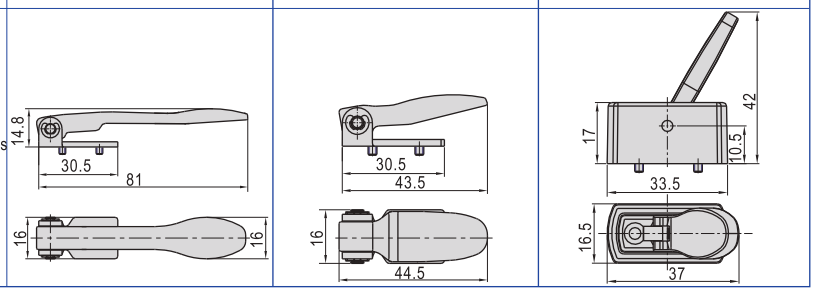

Model	R Roller type		L Roller with free return type	
How to order	Ordering code	Type	Ordering code	Type
	M3R210−P14A	M3R210 Roller type control set	M3L210−P14A	M3L210 Roller with free return type control set
Applicable products	M3R110, M3R210		M3L110, M3L210	

Dimensions

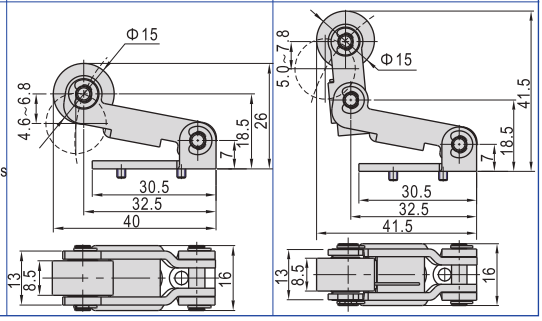

Model	PP Protruding type		PM Mushroom type		PL Latching type (only red)	
How to order	Ordering code	Type	Ordering code	Type	Ordering code	Type
	S3PP05−P11A	S3PP protruding type control set (Green)	S3PM05−P11A	S3PM mushroom type control set (Green)	S3PL05−P12A	S3PL Latching type control set (Red)
	S3PP05−P12A	S3PP protruding type control set (Red)	S3PM05−P12A	S3PM mushroom type control set (Red)		
	S3PP05−P13A	S3PP protruding type control set (Black)	S3PM05−P13A	S3PM mushroom type control set (Black)		
Applicable products	M3PP110, M3PP210		M3PM110, M3PM210		M3PL110, M3PL210	

Dimensions

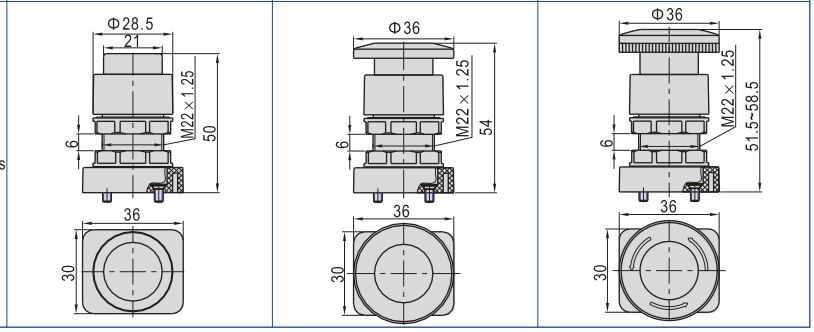

Model	PF Flat type		HS Selector type	
How to order	Ordering code	Type	Ordering code	Type
	S3PF05−P11A	S3PF flat type control set (Green)	S3HS05−P11A	S3HS selector type control set (Green)
	S3PF05−P12A	S3PF flat type control set (Red)	S3HS05−P12A	S3HS selector type control set (Red)
	S3PF05−P13A	S3PF flat type control set (Black)	S3HS05−P13A	S3HS selector type control set (Black)
Applicable products	M3PF110, M3PF210		M3HS110, M3HS210	

Dimensions

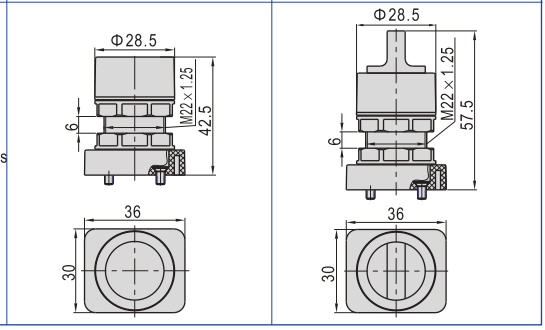

Symbol

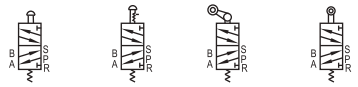

Product feature

1. Exhaust outlet locates over the body, which is convenient to install muffler to decrease noise and pollution.
2. The external force required by direction-change of series of M5B, M5R and M5L is provided by external mechanism, which can be used for position test or [stroke switch] limit switch.
3. M5C,M5D,M5Y,M5PF,M5PM,M5PP,M5PL and M5HS are operated manually, owning control joints with several structure forms and suitable for application under different conditions.
4. It is in sliding column structure that the control force is not influenced by working pressure (that is, there is no back pressure effect); internal circle is sealed with good tightness and the direction-change is sensitive.
5. Lubricant is not necessary.
6. Multi-mounting makes it convenient to install and apply.
7. The control joints of series of M5C,M5D,M5Y,M5R and M5L are made of metal which has longer service life and more reliable and steady performance.

Flow chart

Model: M5B–05

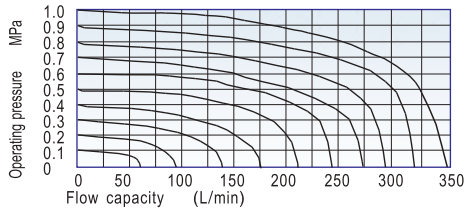

Model: M5B110–06

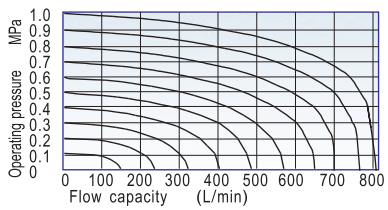

Model: M5B210–06

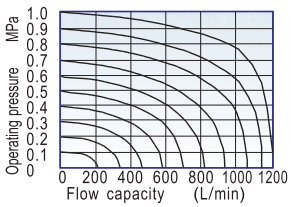

Model: M5B210–08

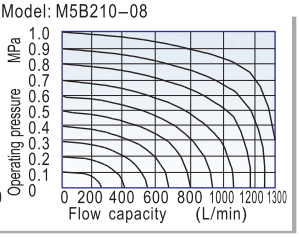

Specification

Model	S5B	S5C	S5D	S5R	S5L	S5Y	S5PM	S5PP	S5PF	S5PL	S5HS
Fluid	Air (to be filtered by 40 μm filter element)										
Operating	External control direct acting type										
Port size①	05:M5; 06:1/8"; 08:1/4"										
Orifice size	Mini type	05:2.5 mm² (Cv=0.14)									
	110	06:8.0mm² (Cv=0.45)									
	210	06:9.0mm² (Cv=0.50); 08:12.0mm² (Cv=0.67)									
Valve type	5/2 Way										
Lubrication②	Not required										
Pressure range	0~1.0MPa(0~145psi)										
Proof pressure	1.5MPa(215psi)										
Temperature	–20~70 ℃										
Material body	Aluminum alloy										

① G thread and NPT thread are available.

② Once lubricated air is used, continue with same medium to optimise valve life span. It is suggested to use ISO VG32 lubricant or the oil with the same grade.

Ordering code

Common type: M5 PM 210 06 R G

Valve's type
M5: M type 5/2 Way

Model

B: Basic type
C: Long handle type
D: Short handle type
Y: Lever typer
R: Roller type
L: Roller with free return type
PL: Latching type
PP: Protruding type
PF: Flat type
PM: Mushroom type
HS: Selector type

Code

110: 100 Series single control
210: 200 Series single control

Thread type

G: G
T: NPT

Button color

Model	Button color
PL	R: Red
PP, PF PM, HS	R: Red
	G: Green
	B: Black
Others	Not code

Port size

Code	Port size
100 Series	06: 1/8"
200 Series	06: 1/8"
	08: 1/4"

Mini type: M5 R 05

Valve's type
M5: M type 5/2 Way

Port size
05: M5

Model

B: Basic type
R: Roller type
L: Roller with free return type

Inner structure

M5L210

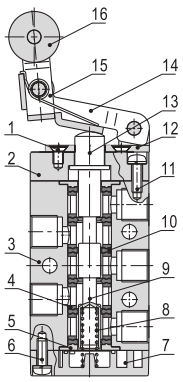

No.	Item	No.	Item
1	Screw	9	Spool
2	Fore cover	10	Piston O-ring
3	Body	11	Screw
4	Spacer	12	Roller holder
5	Positioning block	13	Axle
6	Screw	14	Rotating block
7	Botton cover	15	Rocker
8	Spring	16	Roller

Reversal stroke

Unit:mm

Common type						Mini type		
Type	Spool stroke	Button stroke	Type	Spool stroke	Roller(handle) stroke	Type	Spool stroke	Roller stroke
M5B	2.0~3.3	–	M5R	2.0~3.0	4.6~6.8	M5B05	2.0~3.3	–
M5PF	2.0~3.3	3.8~5.1	M5L	2.0~3.0	5.0~7.8	M5R05	2.0~3.0	6.0~8.5
M5PP	2.0~3.3	3.8~5.1	M5C	2.0~3.0	11.0~16.0	M5L05	2.0~3.0	7.0~10.0
M5PM	2.0~3.3	3.8~5.1	M5D	2.0~3.0	5.5~8.0			
M5PL	2.0~3.3	5.9~7.2						
M5HS	2.0~3.3	5.1~6.4						

M5

Assemble chart

Fixation way of body

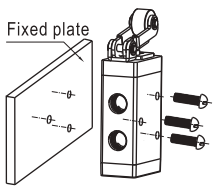

Fixation way of panel

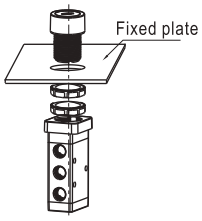

Attentions

1) The control set is made of engineering plastic which only allows manual operation and switching valves through metal impact is forbidden.
2) The series of M5B, M5C, M5D, M5PM, M5PF and M5PP get the function of automatic restoration. The hand valves of M5Y, M5HS and M5PL are in the type of manual restoration. M5PL will be restored by turning the revolve button after being pressed into orientation.
3) Pay attention to the reversing stroke. The reversing stroke can not surpass its stroke stipulated in stroke control table when the direction-change of the valve is forced by any external forces,otherwise it will cause the damage of the valve.
4) The M5L can only switch the valve in single direction (impact from right to left). The impact from the other direction is invalid (from left to right).
5) Control joint combination can be ordered individually.Please refer to the table on the right for order details.

Dimensions

Common type

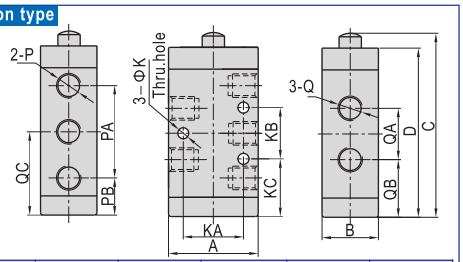

Item\Type	M5B110	M5B210	Item\Type	M5B110	M5B210
A	27	35	P	06:1/8"	06:1/8"
B	18	22			06:1/8"
C	63	71.8	PA	28	36
D	57.5	66	PB	15	14.5
K	3.3	4.3	Q	06:1/8"	06:1/8"
KA	18	23.5			08:1/4"
KB	14	20	QA	16	20
KC	22	22.5	QB	21	22.5
			QC	29	32.5

Mini type

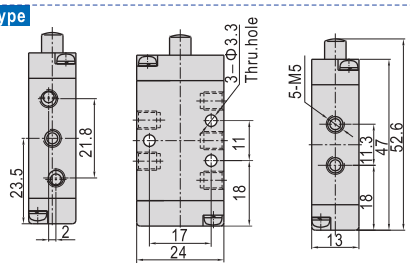

Mini control set dimensions

Model	M3R05 Model		M3L05 Model	
How to order	Ordering code	Type	Ordering code	Type
	M3R05-P14A	M3R05 Roller type control set	M3L05-P14A	M3L05 Roller with free return type control set
Applicable products	M5R05		M5L05	
Dimensions	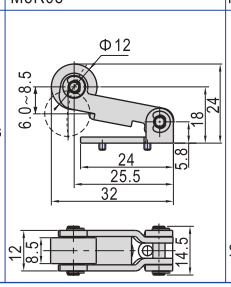		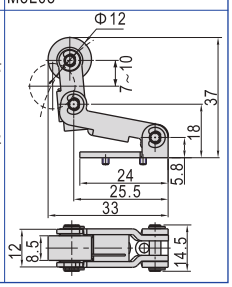	

Control set Dimensions

Model	C Long handle type		D Short handle type		Y Lever type	
How to order	Ordering code	Type	Ordering code	Type	Ordering code	Type
	M3C210-P13A	M3C210 Long handle type control set	M3D210-P13A	M3D210 Short handle type control set	M3Y210-P13A	M3Y210 Lever type control set
Applicable products	M5C110, M5C210		M5D110, M5D210		M5Y110, M5Y210	
Dimensions	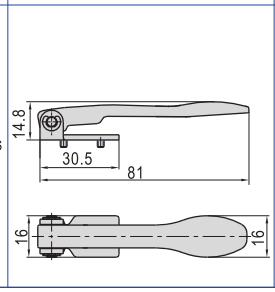		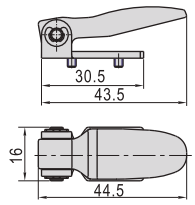		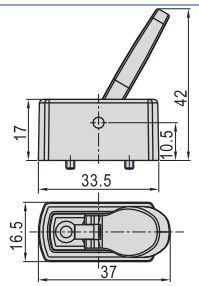	

Model	R Roller type		L Roller with free return type	
How to order	Ordering code	Type	Ordering code	Type
	M3R210-P14A	M3R210 Roller type control set	M3L210-P14A	M3L210 Roller with free return type control set
Applicable products	M5R110, M5R210		M5L110, M5L210	
Dimensions	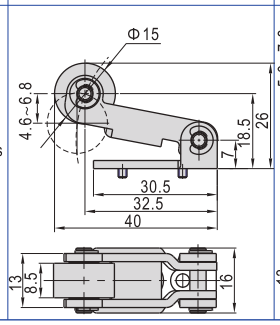		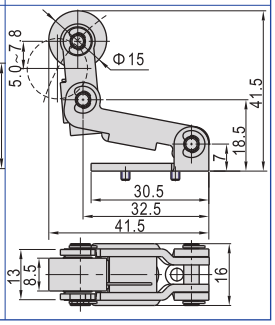	

Model	PP Protruding type		PM Mushroom type		PL Latching type (only red)	
How to order	Ordering code	Type	Ordering code	Type	Ordering code	Type
	S3PP05-P11A	S3PP protruding type control set (Green)	S3PM05-P11A	S3PM mushroom type control set (Green)	S3PL05-P12A	S3PL Latching type control set (Red)
	S3PP05-P12A	S3PP protruding type control set (Red)	S3PM05-P12A	S3PM mushroom type control set (Red)		
	S3PP05-P13A	S3PP protruding type control set (Black)	S3PM05-P13A	S3PM mushroom type control set (Black)		
Applicable products	M5PP110, M5PP210		M5PM110, M5PM210		M5PL110, M5PL210	
Dimensions	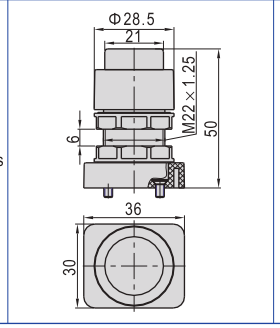		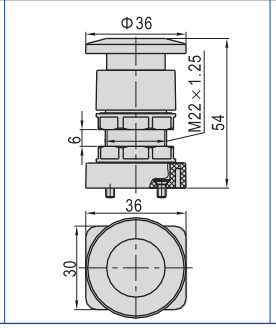		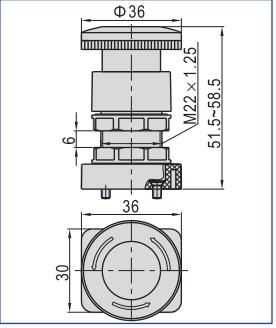	

Model	PF Flat type		HS Selector type	
How to order	Ordering code	Type	Ordering code	Type
	S3PF05-P11A	S3PF flat type control set (Green)	S3HS05-P11A	S3HS selector type control set (Green)
	S3PF05-P12A	S3PF flat type control set (Red)	S3HS05-P12A	S3HS selector type control set (Red)
	S3PF05-P13A	S3PF flat type control set (Black)	S3HS05-P13A	S3HS selector type control set (Black)
Applicable products	M5PF110, M5PF210		M5HS110, M5HS210	
Dimensions	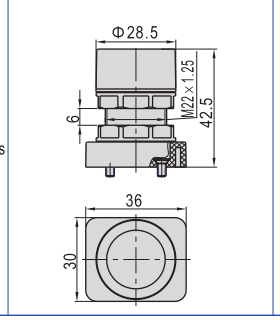		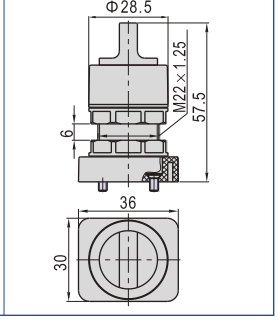	

Specification

Model	CM3□–05	CM3□–06	CM3□–08
Operating	External control		
Fluid	Air (to be filtered by 40 μm filter element)		
Pressure range	0~1.0MPa(0~114psi)(0~10.0bar)		
Proof pressure	1.5MPa(215psi)(15.0bar)		
Temperature	–20~70 ℃		
Valve type①	3 port 2 position		
Orifice size	2.0mm²	2.5 mm²	15.0mm²
Lubrication	0.11	0.14	0.84
Port size②	M5x0.8	1/8"	1/4"
Material body	Aluminum alloy		

① HD series are 5/3 way. ② G thread and NPT thread are available.

Flow chart

Model：CM3B–05

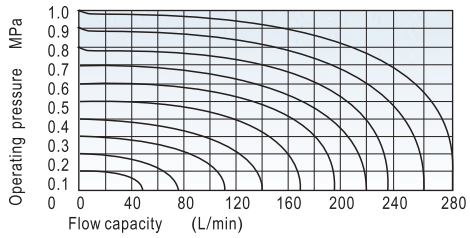

Model：CM3B–06

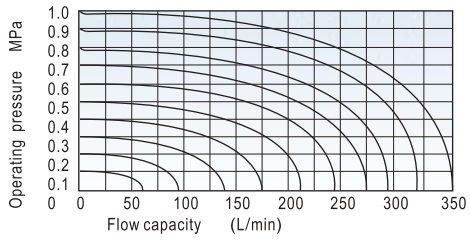

Model：CM3B–08

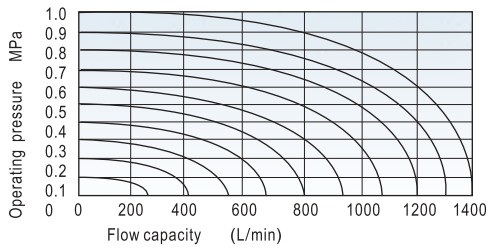

Symbol

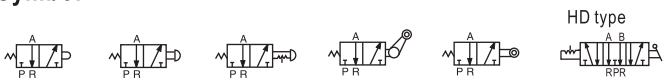

Product feature

1. The external force required by changing the direction of the series of CM3B, CM3V, CM3L and CM3R is provided by external mechanism, which can be used for position test or limit switch.
2. The series of CM3PF, CM3PM, CM3PMS, CM3PMX, CM3PL, CM3PP, CM3HS, CM3HD and CM3Y are operated manually, owning control joints with several structure forms and suitable for application under different conditions.
3. Shut-off structure has good tightness and is sensitive in direction changing and lubricant is not necessary.
4. Multi-mounting makes it convenient to install and apply.
5. The control joints of series of CM3L, CM3V, CM3R and CM3Y are made of metal which has long service life and more reliable and steady performance.
6. CM3PMS. CM3PMX Series have metallic guard, it can protect the push cup, to avoid misact due to outside force touching the push cup. So they can be used more reliably.

Ordering code

CM3 PP 06 B G

Valve's type

CM3: CM type 3/2 5/3 way

Model

B: Basic type
R: Roller type
L: Roller with free return type
V: Vertical type
Y: Lever typer
PL: Latching type
PP: Protruding type
PF: Flat type
PM: Mushroom type
PMS: Mushroom type(with guard)
PMX: Big mushroom type(with guard)
HS: Selector type
HD: Double-selector type

Thread type

Port size	Thread type
M5	Not code
1/8"	G: G
1/4"	T: NPT

Button color

Model	Button color
B,R,L,V,Y	Not code
PL	R: Red
PP,PF,PM PMS,PMX HS,HD	R: Red
	G: Green
	B: Black
	Y: Yellow

Port size

05: M5
06: 1/8"
08: 1/4"

Installation and operation

1. Mounting way: by body, by panel I, by panel II, latching type, mushroom type. Please refer to the following picture:

Fixation way of body

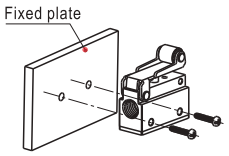

Fixation way of panel Ⅰ

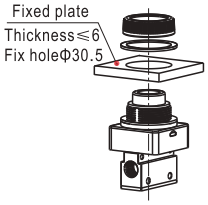

Fixation way of panel Ⅱ

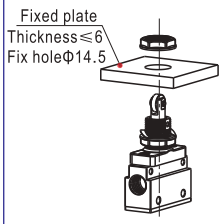

Latching type

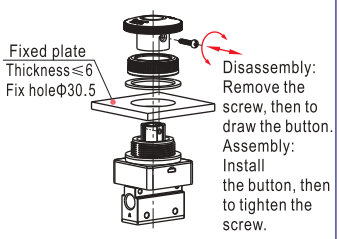

Mushroom type

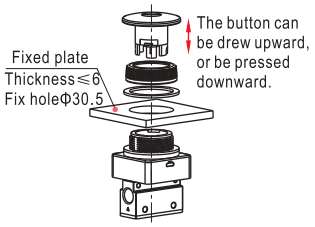

Big mushroom type(With guard)

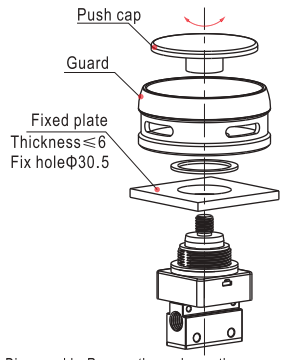

Disassembly: Remove the push cap, then remove the guard.
Assembly: Install the guard, then to tighten the push cap.

Mushroom type(With guard)

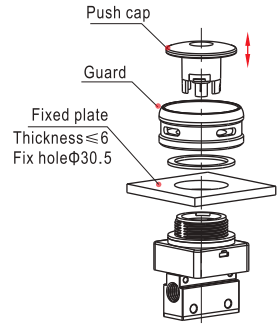

Disassembly: Untighten the guard first, then remove the push cap with the guard.
Assembly: Install the guard, then to tighten the push cap.

2. The control set is made of engineering plastic which only allows manual operation and switching valves through metal impact is forbidden.
3. The series of CM3B, CM3L, CM3V, CM3R, CM3PM, CM3PMS, CM3PMX, CM3PF, CM3PP get the function of automatic restoration. The hand valves of CM3Y, CM3HS, CM3HD, CM3PL are in type of manual restoration. CM3PL will be restored by turning the revolve button after being pressed into orientation.
4. Pay attention to the reversing stroke. The reversing stroke can not surpass its stroke stipulated in stroke control table when the direction-change of the valve is forced by any external forces, otherwise it will cause the damage of the valve.

Type	Spool stroke	Button (Roller\ Handle) stroke	Type	Spool stroke	Button (Roller\ Handle) stroke
CM3B05(06)	1.5~3.0	-	CM3B08	2.4~4.0	–
CM3R05(06)	1.5~2.5	3.0~4.8	CM3R08	2.4~3.2	6.8~9.0
CM3L05(06)	1.5~2.3	3.0~4.8	CM3L08	2.4~3.2	7.2~9.7
CM3V05(06)	1.5~3.0	2.7~4.2	CM3V08	2.4~4.0	2.6~4.2
CM3Y05(06)	1.5~2.5	3.0~4.8	CM3Y08	2.4~3.2	6.8~9.0
CM3PL05(06)	1.5~2.5	4.0~5.0	CM3PL08	2.4~3.5	4.0~5.0
CM3PP05(06)	1.5~3.0	4.0~5.5	CM3PP08	2.4~4.0	4.0~5.5
CM3PF05(06)	1.5~3.0	4.0~5.5	CM3PF08	2.4~4.0	4.0~5.5
CM3HS05(06)	1.5~3.0	4.0~5.5	CM3HS08	2.4~4.0	4.0~5.5
CM3HD05(06)	1.5~3.0	4.0~5.5	CM3HD08	2.4~4.0	4.0~5.5
CM3PM05(06)	1.5~3.0	4.0~5.5	CM3PM08	2.4~4.0	4.0~5.5
CM3PMS05(06)	1.5~3.0	4.0~5.5	CM3PMX08	2.4~4.0	4.0~5.5
CM3PMX05(06)	1.5~3.0	4.0~5.5	CM3PMX08	2.4~4.0	4.0~5.5

5. The CM3L can only switch the valve in single direction(impact from left to right). The impact from the other direction (from right to left) is invalid .
6. Control joint combination can be ordered individually. Please refer to external specification.

Inner structure

CM3V

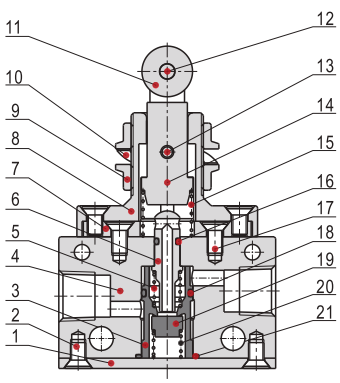

No.	Item	No.	Item
1	Fixing plate	12	Shaft
2	Screw	13	Lock pin
3	Spacer	14	Roller bracket
4	Body	15	Spring
5	Spring	16	O-ring
6	Spool	17	Screw
7	Connerting gasket	18	O-ring
8	connecting holder	19	Bottom cover gasket
9	Clamping nut	20	Spring
10	Spring gasket	21	O-ring
11	Roller		

Dimension (Basic type)

CM3B05

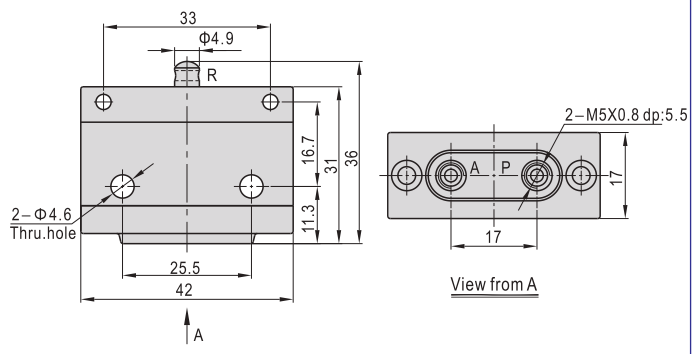

CM3B06

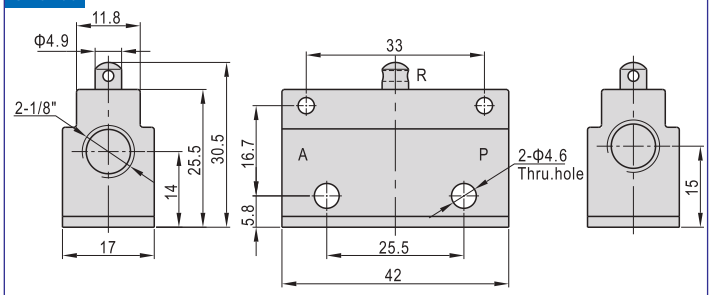

CM3B08

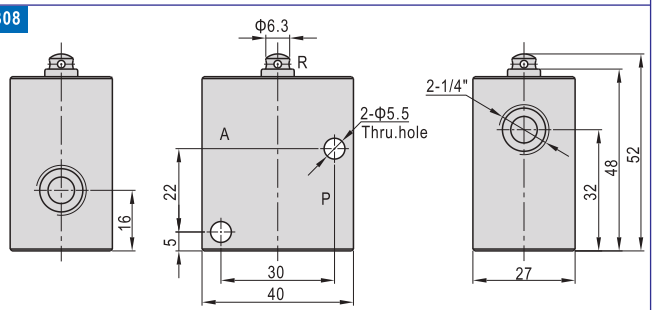

Control set dimension

CM3R06-P1

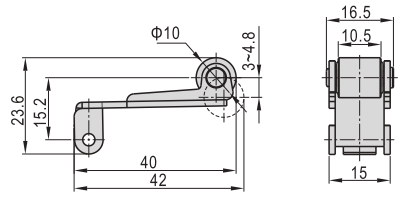

Note: CM3R06 control joint, which used in CM3R05 and CM3R06, can not be ordered individually. It should be matched with basic type.

CM3L06-P1

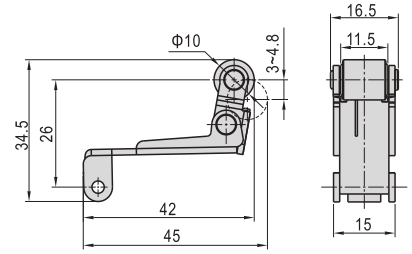

Note: CM3L06 control joint, which used in CM3L05 and CM3L06, can not be ordered individually. It should be matched with basic type.

CM3R08-P1

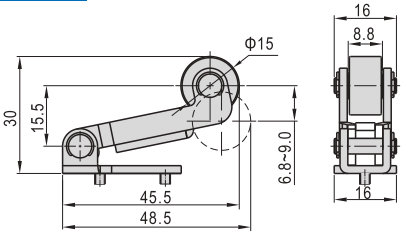

Ordering code	CM3R08-P1
Type	CM3R08 roller type control set
Applicable products	CM3R08

CM3L08-P1

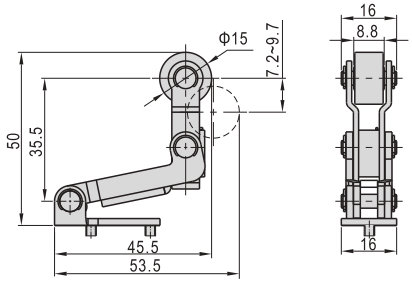

Ordering code	CM3L08-P1
Type	CM3L08 roller type control set
Applicable products	CM3L08

CM3V06-P1

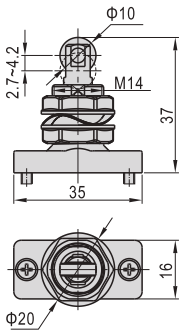

Ordering code	CM3V06-P1
Type	CM3V vertical type control set
Applicable products	CM3V05 CM3V06 CM3V08

CM3Y06-P1

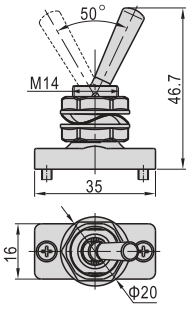

Ordering code	CM3Y06-P1
Type	CM3Y lever type control set
Applicable products	CM3Y05 CM3Y06 CM3Y08

CM3PL06-P2

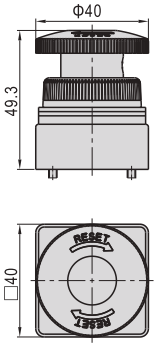

Ordering	CM3PL06-P2
Type	CM3PL latching type control set(red)
Applicable products	CM3PL05 CM3PL06 CM3PL08

CM3PP06-P□

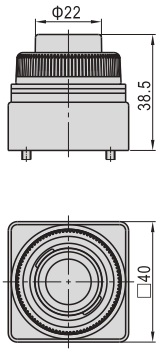

Ordering code	CM3PP06-P1
Type	CM3PP protruding type control set(green)
Applicable products	CM3PP05 CM3PP06 CM3PP08
Ordering code	CM3PP06-P2
Type	CM3PP protruding type control set(red)
Applicable products	CM3PP05 CM3PP06 CM3PP08
Ordering code	CM3PP06-P3
Type	CM3PP protruding type control set(black)
Applicable products	CM3PP05 CM3PP06 CM3PP08
Ordering code	CM3PP06-P4
Type	CM3PP protruding type control set(yellow)
Applicable products	CM3PP05 CM3PP06 CM3PP08

CM3PF06-P□

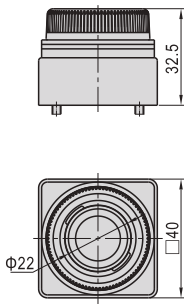

Ordering code	CM3PF06-P1
Type	CM3PF flat type control set(green)
Applicable products	CM3PF05 CM3PF06 CM3PF08
Ordering code	CM3PF06-P2
Type	CM3PF flat type control set(red)
Applicable products	CM3PF05 CM3PF06 CM3PF08
Ordering code	CM3PF06-P3
Type	CM3PF flat type control set(black)
Applicable products	CM3PF05 CM3PF06 CM3PF08
Ordering code	CM3PF06-P4
Type	CM3PF flat type control set(yellow)
Applicable products	CM3PF05 CM3PF06 CM3PF08

CM3PM06-P□

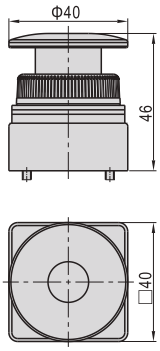

Ordering code	CM3PM06-P1
Type	CM3PM mushroom type control set(green)
Applicable products	CM3PM05 CM3PM06 CM3PM08
Ordering code	CM3PM06-P2
Type	CM3PM mushroom type control set(red)
Applicable products	CM3PM05 CM3PM06 CM3PM08
Ordering code	CM3PM06-P3
Type	CM3PM mushroom type control set(black)
Applicable products	CM3PM05 CM3PM06 CM3PM08
Ordering code	CM3PM06-P4
Type	CM3PM mushroom type control set(yellow)
Applicable products	CM3PM05 CM3PM06 CM3PM08

CM3HS06-P□

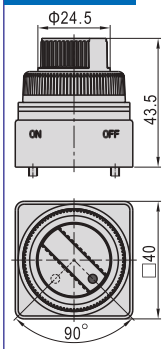

Ordering code	CM3HS06-P1
Type	CM3HS selector type control set(green)
Applicable products	CM3HS05 CM3HS06 CM3HS08
Ordering code	CM3HS06-P2
Type	CM3HS selector type control set(red)
Applicable products	CM3HS05 CM3HS06 CM3HS08
Ordering code	CM3HS06-P3
Type	CM3HS selector type control set(black)
Applicable products	CM3HS05 CM3HS06 CM3HS08
Ordering code	CM3HS06-P4
Type	CM3HS selector type control set(yellow)
Applicable products	CM3HS05 CM3HS06 CM3HS08

CM3PMX06-P□

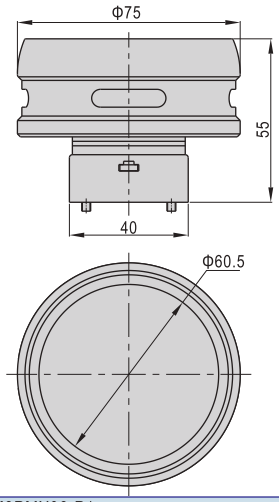

Ordering code	CM3PMX06-P1
Type	CM3PMX big mushroom type control set(green with guard)
Applicable products	CM3PMX05 CM3PMX06 CM3PMX08
Ordering code	CM3PMX06-P2
Type	CM3PMX big mushroom type control set(red with guard)
Applicable products	CM3PMX05 CM3PMX06 CM3PMX08
Ordering code	CM3PMX06-P3
Type	CM3PMX big mushroom type control set(black with guard)
Applicable products	CM3PMX05 CM3PMX06 CM3PMX08
Ordering code	CM3PMX06-P4
Type	CM3PMX big mushroom type control set(yellow with guard)
Applicable products	CM3PMX05 CM3PMX06 CM3PMX08

CM3PMS06-P□

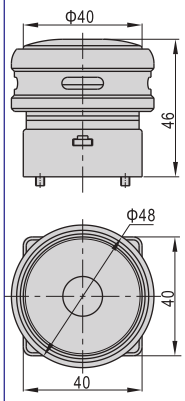

Ordering code	CM3PMS06-P1
Type	CM3PMS mushroom type control set(green with guard)
Applicable products	CM3PMS05 CM3PMS06 CM3PMS08
Ordering code	CM3PMS06-P2
Type	CM3PMS mushroom type control set(red with guard)
Applicable products	CM3PMS05 CM3PMS06 CM3PMS08
Ordering code	CM3PMS06-P3
Type	CM3PMS mushroom type control set(black with guard)
Applicable products	CM3PMS05 CM3PMS06 CM3PMS08
Ordering code	CM3PMS06-P4
Type	CM3PMS mushroom type control set(yellow with guard)
Applicable products	CM3PMS05 CM3PMS06 CM3PMS08

CM3HD06-P□

CM3HD05 type

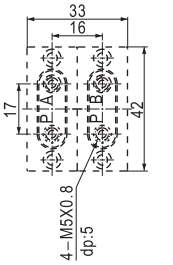

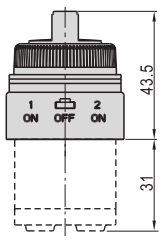

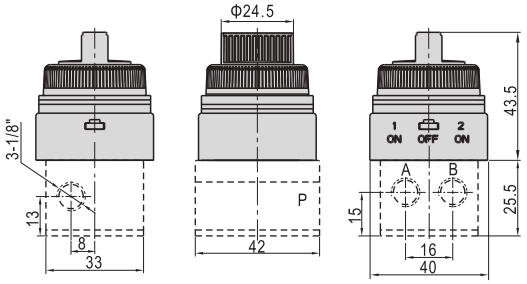

CM3HD06 type

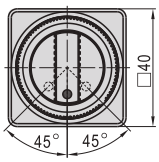

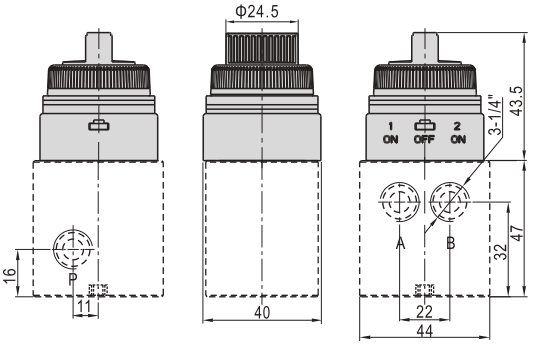

CM3HD08 type

Ordering code	CM3HD06-P1
Type	CM3HD double-selector type control set(green)
Applicable products	CM3HD05 CM3HD06 CM3HD08
Ordering code	CM3HD06-P2
Type	CM3HD double-selector type control set(red)
Applicable products	CM3HD05 CM3HD06 CM3HD08
Ordering code	CM3HD06-P3
Type	CM3HD double-selector type control set(black)
Applicable products	CM3HD05 CM3HD06 CM3HD08
Ordering code	CM3HD06-P4
Type	CM3HD double-selector type control set(yellow)
Applicable products	CM3HD05 CM3HD06 CM3HD08

Note: CM3HD control joint can be ordered individually, but should be matched with the body of CM3HD.

Specification

Model	ZM3R	ZM3J	ZM3P
Operating	External control direct acting type		
Fluid	Air (to be filtered by 40 μm filter element)		
Pressure range	-0.1~1.0MPa(-1~10bar)(-15~114psi)		
Proof pressure	1.5MPa(15bar)(215psi)		
Temperature	-20~70 ℃		
Valve type	3/2 Way		
Orifice size	6.0mm² (Cv=0.34)		
Port size①	1/8"		
Lubrication②	Not required		
Material body	Aluminum alloy		

① G thread and NPT thread are available.
② Once lubricated air is used,continue with same medium to optimise valve life span. It is suggested to use ISO VG32 lubricant or the oil with the same grade.

Symbol

Ordering code

ZM3 R 06 W G

- **Valve's type**: ZM3: ZM type 3/2 Way
- **Model**: R: Roller type; J: Adjustable roller type; P: Contact pin adjustable roller type
- **Port size**: 06: 1/8"
- **Extreme angle of opening and closing of control head**: Blank: Standard type; W: Large angle type
- **Thread type**: G: G; T: NPT

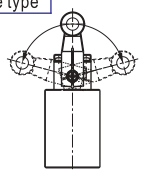

Product feature

1. The activity direction could be changed(Only adapt to standard type, large angle type unavailable)

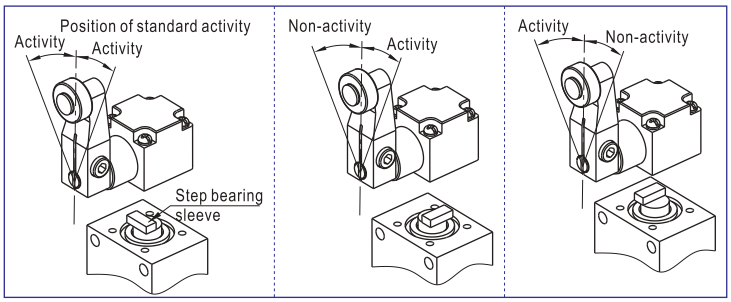

2. The rolling wheel could be installed at the inside of leverage

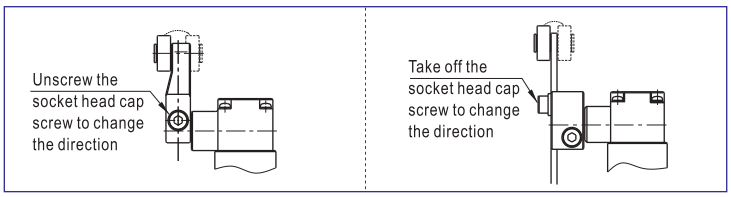

3. Installation position of leverage could be changed

4. Direction of head part could be changed

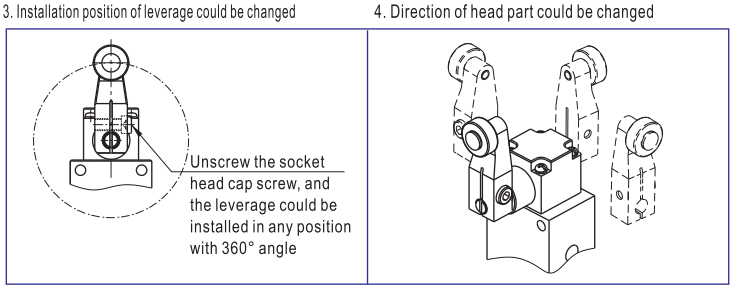

5. Length of contact pin could be changed

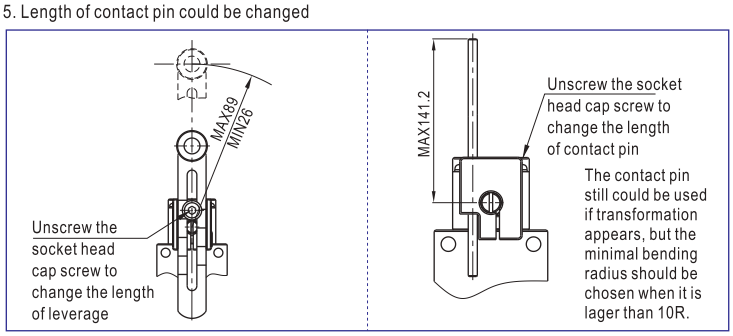

Flow chart

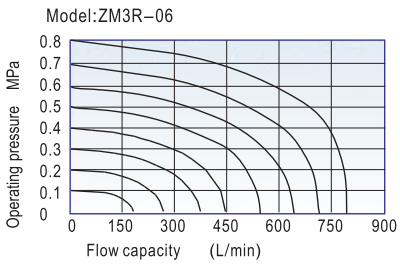

Inner structure

ZM3R

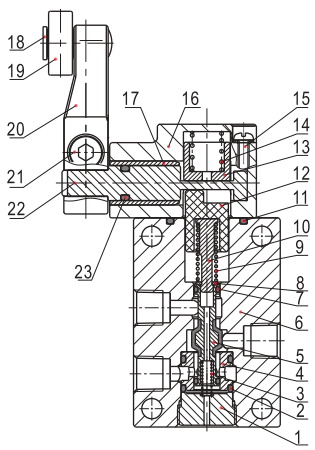

No.	Item
1	Bottom cover
2	O-ring
3	Spring
4	Spacer
5	Spool
6	Body
7	O-ring
8	Spring washer
9	Spring
10	Man drill
11	O-ring
12	Bushing
13	Spring holder
14	Spring
15	Screw
16	Front cover
17	Bushing
18	Shaft
19	Roller
20	Rocker arm
21	Screw
22	Rotation axis
23	O-ring

ZM3

Dimensions

ZM3R

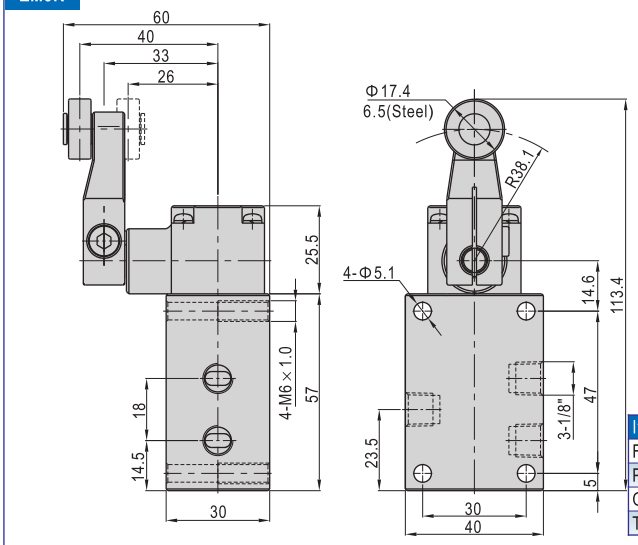

Item\Model	ZM3R06	ZM3R06–W
F.O.F	20N	20N
P.T.	20°	25°
O.T.	30°	50°
T.T.	50°	75°

ZM3J

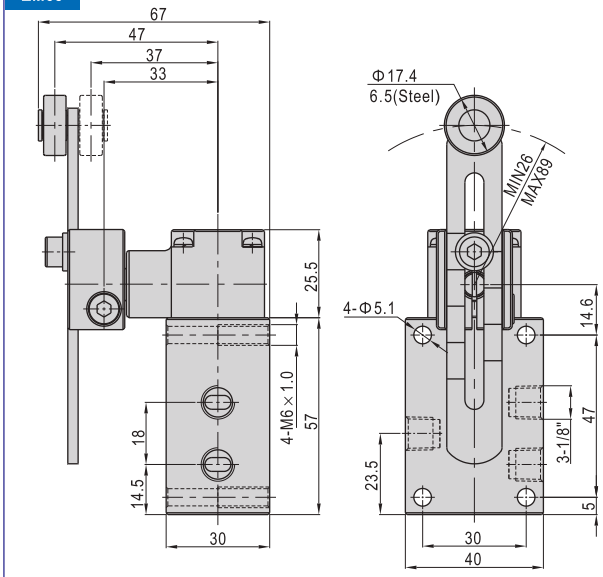

Item\Model	ZM3J06	ZM3J06–W
F.O.F.①	20N	20N
P.T.	20°	25°
O.T.	30°	50°
T.T.	50°	75°

* When the length of leverage is 38.1mm

ZM3P

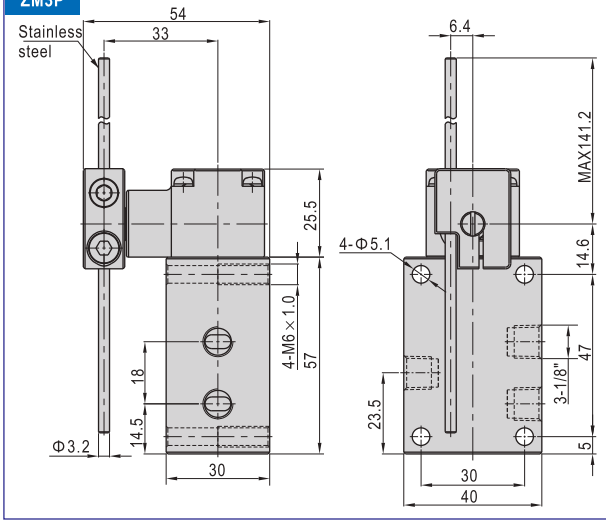

Item\Model	ZM3P06	ZM3P06–W
F.O.F.①	2.3N	2.3N
P.T.	20°	25°
O.T.	30°	50°
T.T.	50°	75°

* When the length of leverage is 141.2mm

Description of symbol

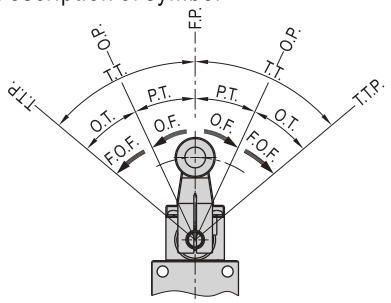

F.P. Free position: the position of control head when no external force applied;

O.P. Activity position: the position when the control head is applied with external force and the valve is switched;

T.T.P. Extreme position of actuation: position of control head when it is pushed until end position;

O.F. Actuation power: when driving from free position to actuation position, the operation power applied on control head;

F.O.F. Extreme actuation power: when driving from free position to extreme actuation position, the operation power applied on control head;

P.T. Free route: movement distance or rotation angle from free position of control head to actuation position;

O.T. Actuation route: movement distance or rotation angle from actuation position of control head to extreme actuation position;

T.T. Total route: movement distance or rotation angle from free position of control head to extreme actuation position;

Foot pedal valve (3/2way)

3F, 3FM Series

Specification

Model	3 FM210–M5	3F210–06	3FM210–06	3F210–08	3FM210–08
Fluid	Air (to be filtered by 40 μ m filter element)				
Operating	Acting type controlled by foot normally closed				
Port size①	M5	1/8"	1/4"	1/8"	1/4"
Valve type	3/2 Way				
Pressure range	0~0.8MPa(0~114psi)				
Proof pressure	1.5MPa(215psi)				
Temperature	-20~70℃				
Material body	3FM:Plastic; 3F:Aluminum alloy				
Lubrication	Not required				

① G thread and NPT thread are available.

Symbol

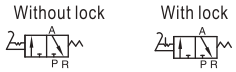

Product feature

1. Direct acting and normally closed type.
2. The 3F series has aluminum foot pedal and 3FM series has plastic foot pedal, in direct acting type, horizontal and compact structure.
3. If the duration of direction-change is long, the valves with lock may be selected.
4. The clamping framework is steady and reliable that it is easy and quick to unlock. However, with the limitation of the dimension of structure, it can not bear frequent strong impact.

Inner structure

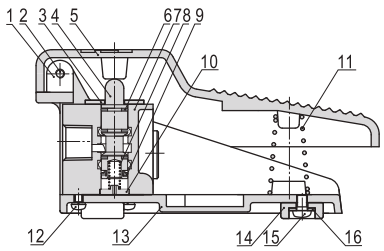

No.	Item	No.	Item	No.	Item
1	Bushing	7	Body	13	Base
2	Fixed screw	8	Spring	14	Base pad
3	Fixed plate	9	E clip	15	Fixed screw
4	Spool	10	Spring bolder	16	Clip
5	Pedal	11	Override spring		
6	O-ring	12	Fixed screw		

Note:

Note:Lockable type should be added grease periodically to ensure the machine can work regularly

Ordering code

3F210 08 L G

Model

3FM210: 3/2 way foot pedal valve (mini type)
3F210: 3/2 way foot pedal valve

Thread type

Port size	Thread type
M5	Not code
1/8"	G: G
1/4"	T: NPT

Port size

Model	Port size
3FM210	M5: M5
	06: 1/8"
	08: 1/4"
3F210	06: 1/8"
	08: 1/4"

Note

Model	Note
3FM210	Not code
3F210	Blank: Without lock
	L: With lock

Dimensions

3FM210

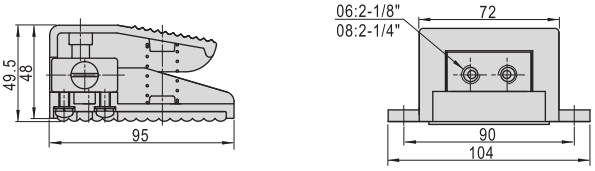

3F210

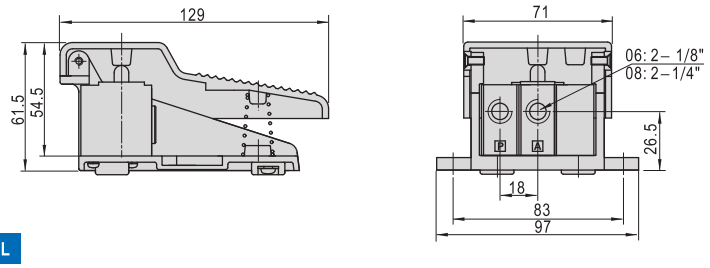

3F210L

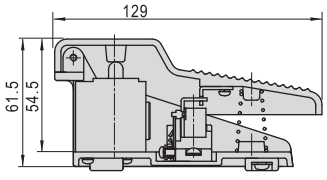

Specification

Model	4F210–08	4F210–08L	4F210–08F	4F210–08LF
Fluid	Air (to be filtered by 40 μm filter element)			
Operating	Acting type controlled by foot			
Port size①	1/4"			
Valve type	5/2 Way			
Pressure range	0~0.8MPa(0~114psi)			
Proof pressure	1.5MPa(215psi)			
Temperature	-20~70℃			
Material body	Aluminum alloy			
Lubrication	Not required			

① G thread and NPT thread are available.

Ordering code

4F210 08 L G

- **Model**: 4F210: 5/2 way foot pedal valve
- **Port size**: 08: 1/4"
- **Thread type**: G: G; T: NPT
- **Note**: Blank: Without lock; L: With lock; F: With guard; LF: With lock and guard

Symbol

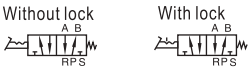

Product feature

1. The aluminum foot pedal is designed with direct acting, which is steady and reliable.
2. If the duration of direction-change is long, the valves with lock may be selected.
3. The clamping framework is steady and reliable that it is easy and quick to unlock. However, with the limitation of the dimension of structure, it can not bear frequent strong impact.
4. Plastic guard with high strength may be selected.

Inner structure

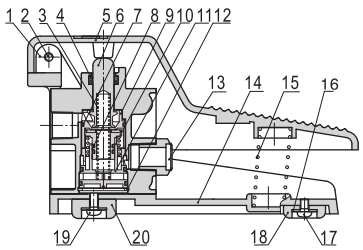

No.	Item	No.	Item	No.	Item	No.	Item
1	Pin	6	Spool	11	Bottom cover	16	Washer
2	Screw	7	O-ring	12	C clip	17	Screw
3	Spring	8	O-ring	13	Silencer	18	Base pad
4	E clip	9	Front cover	14	Base	19	Screw
5	Pedal	10	Piston	15	Pedal spring	20	Base pad

Note:

Note: Lockable type should be added grease periodically to ensure the machine can work regularly

Dimensions

4F210-08

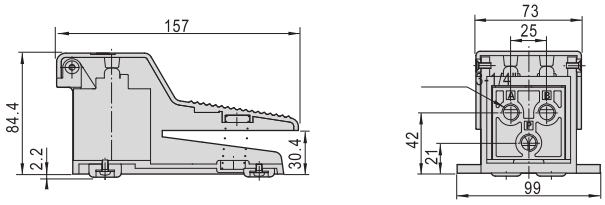

4F210-08L

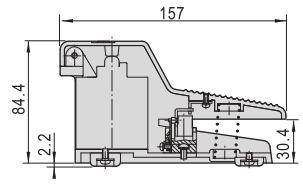

4F210-08F

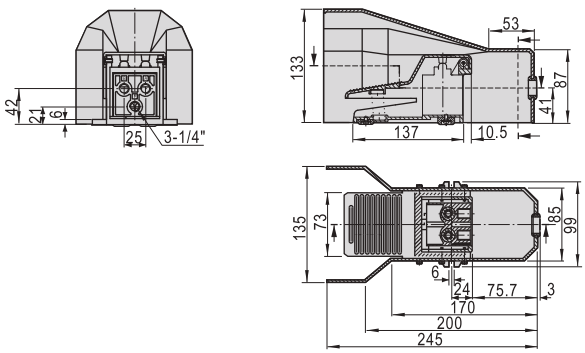

4F210-08LF

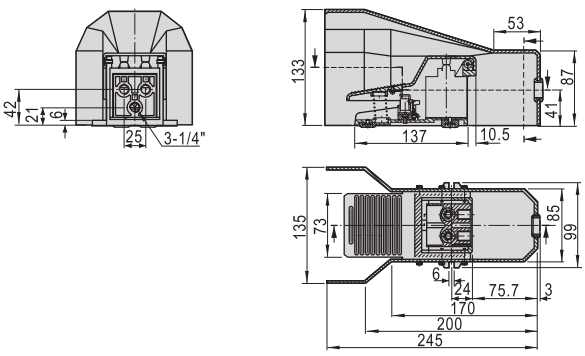

Specification

Model		ASC100–06	ASC200-08	ASC300-10	ASC300-15
Fluid		Air (to be filtered by 40 μm filter element)			
Port size①		1/8"	1/4"	3/8"	1/2"
Pressure range		0.05~0.95MPa(7~135psi)			
Proof pressure		1.5MPa(215psi)			
Temperature		-20~70℃			
Material body		Aluminum alloy			
Flow (L/min)	Control flow	200	450	1250	1650
	Free flow	400	800	1500	2500

① G thread and NPT thread are available.

Ordering code

ASC 300 10 G

- **Model**: ASC: Flow control valve
- **Code**: 100: 100 series; 200: 200 series; 300: 300 series
- **Thread type**: G: G; T: NPT
- **Port size**

Model	Port size
100 series	06: 1/8"
200 series	08: 1/4"
300 series	10: 3/8"
	15: 1/2"

Symbol

Product feature

1. Small and compact structure.
2. Allows air to exhaust and cut off air flow. The adjustment screw is both sensitive and precise..
3. Can be mounted in various position to facilitate installation and application.

Flow chart

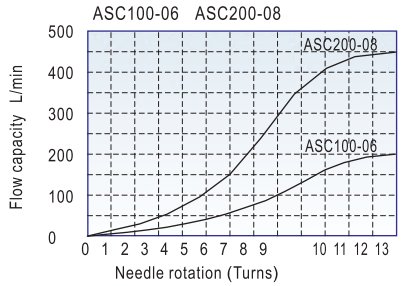

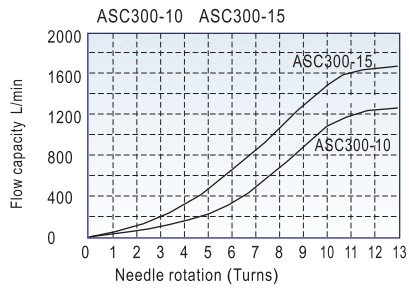

Inner structure

No.	Item
1	Adjustment cap
2	Clamping cap
3	Throttle body
4	Hexagon nut
5	O-ring
6	O-ring
7	Throttle sheath
8	Body
9	Throttle column
10	Spool O-ring

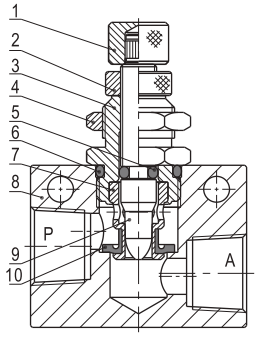

Dimensions

ASC100, 200

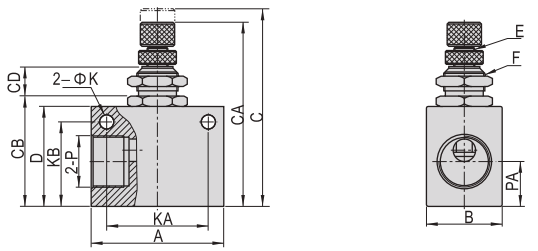

ASC300

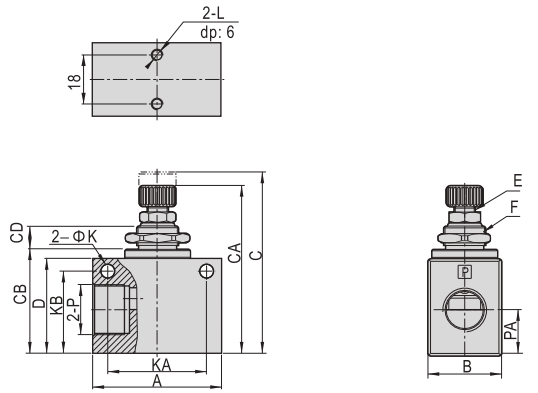

Type\Item	A	B	C	CA	CB	CD	D	E	F	K	KA	KB	L	P	PA
ASC10006	32	18	52.5	47	26	8.6	23	M6×0.5	M12×0.75	4.3	22	18	M4×0.7	1/8"	10
ASC20008	36	18	56.5	51	30	8.6	27	M6×0.5	M12×0.75	4.3	26	23	M4×0.7	1/4"	13.5
ASC30010	50	28	74	65	40.5	10	37	M8×0.75	M16×1.0	5.3	35	32	M4×0.7	3/8"	17.5
ASC30015	50	28	74	65	40.5	10	37	M8×0.75	M16×1.0	5.3	35	32	M4×0.7	1/2"	17.5

NRV

Symbol

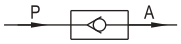

Product feature

1. There are many port sizes: 1/8", 1/4", 3/8", 1/2", 3/4", 1".
2. It allows the fluid to flow in one direction **ONLY**.
3. It is prevent backflow due to sudden drop in pressure or decrease in air consumption .
4. There is large valid area of section.
5. The spool is made of POM, valve's core sealed with rubber, and it has a compact structure.

Ordering code

NRV 08 G

Model	Port size	Thread type
NRV: Non-return valve	06: 1/8" 08: 1/4" 10: 3/8" 15: 1/2" 20: 3/4" 25: 1"	G: G T: NPT

Flow chart

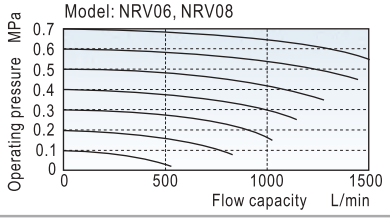

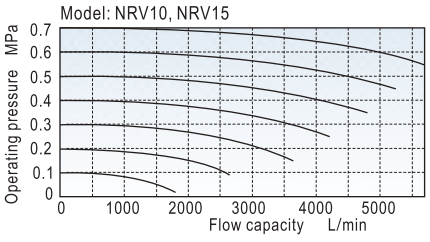

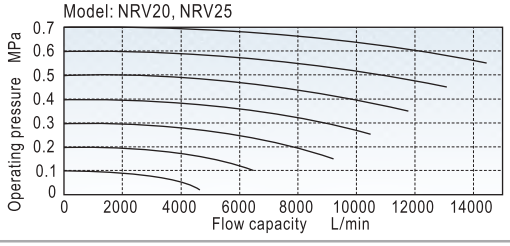

Specification

Model	NRV06	NRV08	NRV10	NRV15	NRV20	NRV25
Fluid	Air (to be filtered by 40 μm filter element)					
Port size①	1/8"	1/4"	3/8"	1/2"	3/4"	1"
Orifice size mm^2(Cv valve)	18(1.0)	27(1.5)	60(3.33)	73(4.06)	230(12.78)	260(14.44)
Pressure range	0.02~1.0MPa(2.9~145psi)					
Proof pressure	1.5MPa(215psi)					
Temperature	–20~70℃					
Material body	Aluminum alloy					

Note ①: G thread and NPT thread are available.

Inner structure

NRV06, 08

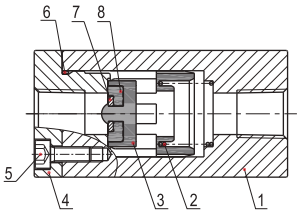

NRV10, 15, 20, 25

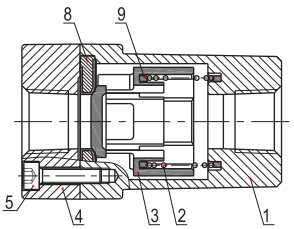

No.	Item	Material
1	Body	Aluminum alloy
2	Spring	Stainless steel
3	Spool	POM
4	End cover	Aluminum alloy
5	Screw	Carbon steel
6	O-ring	NBR
7	Washer	SPCC
8	Gasker washer	NBR/Aluminum alloy+NBR
9	Bumper	NBR

Dimension

NRV06, 08

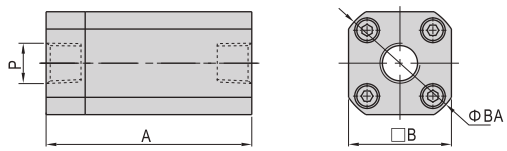

NRV10, 15, 20, 25

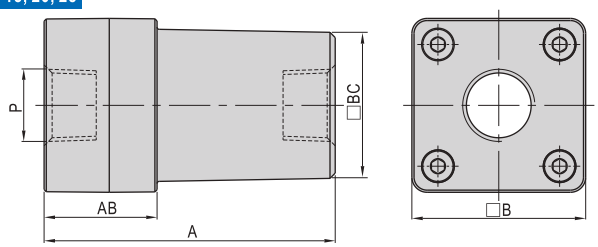

Model\Item	A	AB	B	BA	BC	P
NRV06	50	-	25	30	-	1/8"
NRV08	50	-	25	30	-	1/4"
NRV10	67	26	40	-	33.6	3/8"
NRV15	67	26	40	-	33.6	1/2"
NRV20	95	31.5	52	-	46.7	3/4"
NRV25	95	31.5	52	-	46.7	1"

Product series

2S Series(Direct-acting and normally closed) 98

2S Series(Internally piloted and normally closed) 100

2KS Series(Direct–acting and normally opened) 102

2KS Series(Internally piloted and normally opened) 104

2W Series(Direct-acting and normally closed) 106

2W Series(Internally piloted and normally closed) 108

2KW Series(Direct–acting and normally opened) 110

2KW Series(Internally piloted and normally opened) 112

2L Series(Direct-acting and normally closed) 114

2L Series(Internally piloted and normally closed) 116

2KL Series(Direct–acting and normally opened) 118

2KL Series(Internally piloted and normally opened) 120

2V Series 124

2P Series 126

2J Series 127

Installation and Application

1. Before installing, be sure the valve hasn't been damaged via transportation.
2. The coil must be pure vertical, the inlet and outlet on body must be horizontal. it's suggested to use the medium lubricated by 40 μ m filter element. Be aware of the flow direction and port size.
3. Please notice whether the installation condition accords with technical requirements (such as “voltage”,“actuation frequency”, “working pressure” and “scope of application temperature”), then the equipment can be installed and used.
4. Take measure to avoid vibration and frozen.
5. Before using the fittings and tubes make sure they are clean. When connecting tofittings, be sure the PTFE Thread Seal Tape is used correctly.
6. To keep the dust away, Default paragraph font;Never forget to install dirt-proof boot in air intake and outlet during dismounting.

Symbol

Product feature

1. Direct acting and normally closed type 2/2 way solenoid valve. Its high sensibilily allows it to change direction quickly;
2. It has wide pressure range, including extra high pressure (X), high pressure (H), standard , large volume(L) and extra large volume (T) to choose from;
3. It is compact, small size and light weight. It is easy to install and dismantle.
4. The valve body is made of SUS304 . Its coil has a Heat resistance classification of Class B. The standard seal material is FPM-F.Please contact us if other material are required.
5. The protection class of the coil is IP65 and there is a choice for grommet or terminal electrical entry .

Valve's specification

Acting	Direct acting				
Initial stats	Normally closed				
Adaptable fluid ①	Air, Water, Oil				
Viscosity limit	Under 20CST				
Ambient and fluid temperature(℃)		Water	Air	Oil	Ambient
	Max.	80	90	80	70
	Min.	1	−20 ②	−10 ③	−20

① Note: Please refer to P123 for detail of other's fluid.
② Note: Dew point: −20(℃) or less. ③ Note:50CST or less.

Inner structure

2S030 Terminal

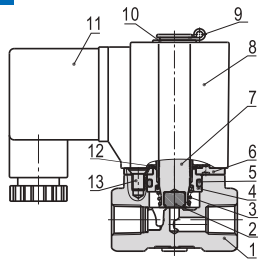

No.	Item	No.	Item	No.	Item
1	Body	6	Wear ring	11	Connector
2	Airtight ring	7	Movable core	12	Washer
3	Spring	8	Coil	13	Screw
4	Fixed cap	9	E Clip		
5	O-ring	10	Gasket		

Specification

Type\Item		Port size①	Orifice size (Φmm)	Cv	Valid area or section(mm^2)	Weight ②(g)	Max.operating pressure differentia MPa	Max.operating pressure differentia psi	Proof pressure MPa	Proof pressure psi
2SX030	−06	1/8"	1.5	0.10	1.8	300	3.0	450	5.0	750
	−08	1/4"				295				
2SH030	−06	1/8"	2.0	0.18	3.0	300	2.0	300		
	−08	1/4"				290				
2S030	−06	1/8"	3.0	0.33	6.0	300	1.0	150		
	−08	1/4"				290				
2SL030	−06	1/8"	4.0	0.55	10.0	300	0.5	75		
	−08	1/4"				290				
2ST030	−06	1/8"	6.0	1.10	12.0	300	0.1	15		
	−08	1/4"				290				
2SX050	−10	3/8"	3.0	0.34	6.1	600	3.0	450		
	−15	1/2"				590				
2SH050	−10	3/8"	4.0	0.55	10.0	600	2.0	300		
	−15	1/2"				590				
2S050	−10	3/8"	5.0	0.83	15.0	600	1.0	150		
	−15	1/2"				590				
2SL050	−10	3/8"	7.0	1.40	25.0	600	0.5	75		
	−15	1/2"				590				
2ST050	−10	3/8"	10.0	2.20	40.0	600	0.1	15		
	−15	1/2"				590				

① G thread and NPT thread are available.
② The weight in the table is the terminal valve's weight, 2S030 series grommet valve's weight is 10g less than terminal's. 2S050series grommet valve's weight is 20g less than terminal's.

Specification of coil

Valve type	Coil type	Power type	Frequency (Hz)	Voltage range	Electrical entry	Power Consumption (VA/W)	Insulation	Temp.rise(℃)
2S□030	CDA116 CLA116	AC	50	±15%	Terminal (CDA)	10.0VA	Class B	35
			60			8.0VA		30
		DC	–	±10%		6.5W		30
2S□050	CDA170 CLA170	AC	50	±15%	Grommet (CLA)	25.0VA		60
			60			22.0VA		55
		DC	–	±10%		10.5W		40

Ordering code

2S L 030 08 A □ G

- **Model**: 2S: 2/2 way direct-acting and normally closed
- **Thread type**: G: G; T: NPT
- **Pressure condition**: X: Extra high pressure; H: High pressure; Blank: Standard; L: Large volume; T: Extra large volume
- **Electrical entry**: Blank: Terminal; I: Grommet
- **Size series**: 030: 030 Series; 050: 050 Series
- **Voltage**: A: AC220V; B: DC24V; C: AC110V; E: AC24V; F: DC12V
- **Port size**:

Size series	Port size
030 Series	06: 1/8"
	08: 1/4"
050 Series	10: 3/8"
	15: 1/2"

Ordering code of accessories

F−2S030 LB

- **Accessories code**: F: Mounting accessories
- **Accessories type**: LB: LB type
- **Valve type**: 2S030: 030 Series body; 2S050: 050 Series body

Flow Chart

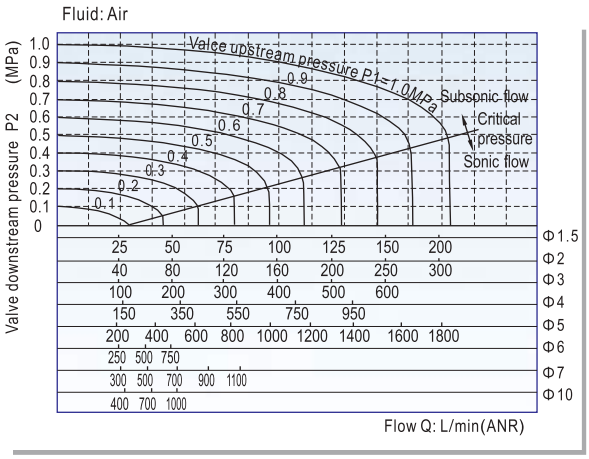

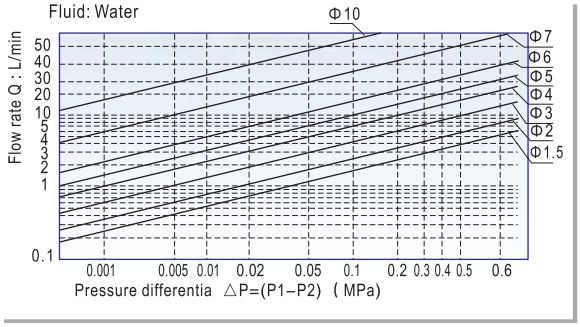

Dimensions

2S□030(Terminal)

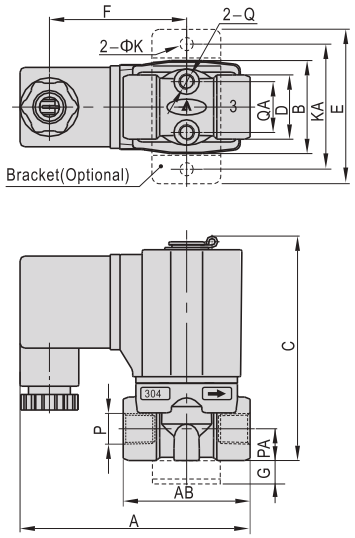

2S□050(Terminal)

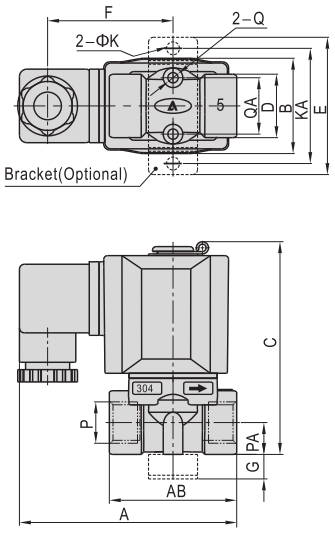

Type\Item	A	AB	B	C	D	E	F	G	K	KA	P	PA	Q	QA
2S□030−06	72.5	40	29.5	71	20	49	43.5	10	5.3	40	1/8"	10	M5	16
2S□030−08	72.5	40	29.5	71	20	49	43.5	10	5.3	40	1/4"	10	M5	16
2S□050−10	89.5	52	39	87	26	56	51	10	5.3	48	3/8"	13	M5	23
2S□050−15	89.5	52	39	87	26	56	51	10	5.3	48	1/2"	13	M5	23

2S□030(Grommet)

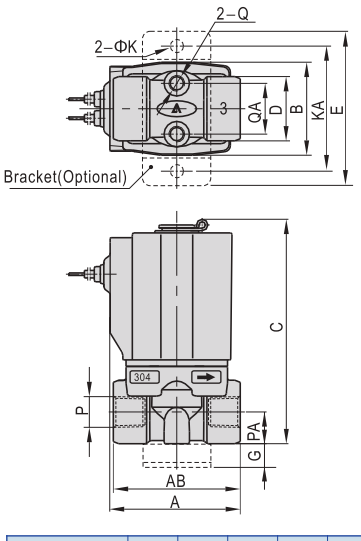

2S□050(Grommet)

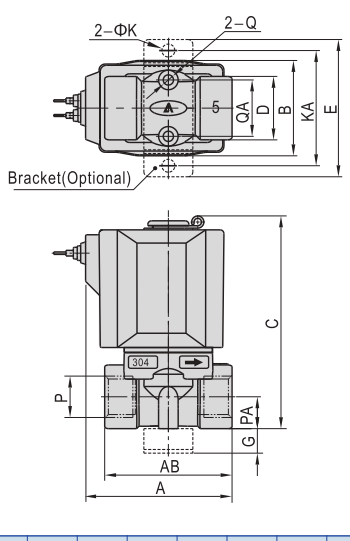

Type\Item	A	AB	B	C	D	E	G	K	KA	P	PA	Q	QA
2S□030−06	41	40	29.5	71	20	49	10	5.3	40	1/8"	10	M5	16
2S□030−08	41	40	29.5	71	20	49	10	5.3	40	1/4"	10	M5	16
2S□050−10	60	52	39	87	26	56	10	5.3	48	3/8"	13	M5	23
2S□050−15	60	52	39	87	26	56	10	5.3	48	1/2"	13	M5	23

Symbol

Product feature

1. Indirect acting(Internal pilot) and normally closed type 2/2 way solenoid valve. Its can change direction quickly and has large flow.
2. It is compact, small and light weight. It is easy to install and dismantle;
3. The valve body is made of SUS304 . The coil has a Heat resistance classification of Class B. The standard seal material is FPM-F. Please contact us if other material are required.
4. The protection class of the coil is IP65 and there is a choice for grommet or terminal electrical entry .

Valve's specification

Acting	Intermally piloted				
Initial stats	Normally closed				
Adaptable fluid ①	Air, Water, Oil				
Viscosity limit	Under 20CST				
Ambient and fluid temperature(℃)		Water	Air	Oil	Ambient
	Max.	80	90	80	70
	Min.	1	−20 ②	−10 ③	−20

① Note: Please refer to P123 for detail of other's fluid.
② Note: Dew point: −20(℃) or less. ③ Note:50CST or less.

Inner structure

2S150(Grommet)

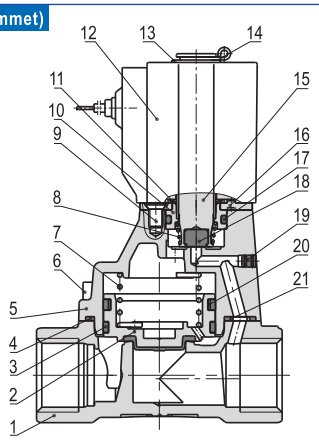

No.	Item	No.	Item	No.	Item	No.	Item
1	Body	7	Spring	13	Washer	19	Plug
2	Piston	8	Spring	14	E Clip	20	Spring
3	Wear ring	9	Screw	15	Movable core	21	Bushing
4	O-ring	10	Fixed cap	16	Fixed plate		
5	Cover	11	Washer	17	O-ring		
6	Screw	12	Coil assembly	18	Airtight ring		

Specification

Type\Item	Port size①	Orifice size (Φmm)	Cv	Valid area or section(mm^2)	Weight ②(g)	Max.operating pressure differentia		Proof pressure	
						MPa	psi	MPa	psi
2S150−15	1/2"	15.0	5.50	100.0	675	Max:1.0 Min:0.05	Max:150 Min:10	1.5	220
2S200−20	3/4"	20.0	9.50	170.0	875				
2S250−25	1"	25.0	12.50	220.0	1120				
2S320−32	1 1/4"	35.0	23.00	420.0	2700				
2S400−40	1 1/2"	40.0	31.00	560.0	3250				
2S500−50	2"	50.0	49.00	880.0	4300				

① G thread and NPT thread are available.
② The weight in the table is the terminal valve's weight, 2S150~250 series grommet valve's weight is 10g less than terminal's. 2S320~5000series grommet valve's weight is 20g less than terminal's.

Specification of coil

Valve type	Coil type	Power type	Frequency (Hz)	Voltage range	Electrical entry	Power Consumption (VA/W)	Insulation	Temp. rise(℃)
2S150 2S200 2S250	CDA116 CLA116	AC	50	±15%	(Terminal) (CDA) (Grommet) (CLA)	10.0VA	Class B	35
			60			8.0VA		30
		DC	–	±10%		6.5W		30
2S320 2S400 2S500	CDA170 CLA170	AC	50	±15%		25.0VA		60
			60			22.0VA		55
		DC	–	±10%		10.5W		40

Ordering code

2S 150 15 A □ G

- **Model**: 2S: 2/2 way internally piloted and normally closed
- **Orifice size**: 150: Φ15mm; 200: Φ20mm; 250: Φ25mm; 320: Φ35mm; 400: Φ40mm; 500: Φ50mm
- **Port size**

Orifice size	Port size
Φ15mm	15: 1/2"
Φ20mm	20: 3/4"
Φ25mm	25: 1"
Φ35mm	32: 1 1/4"
Φ40mm	40: 1 1/2"
Φ50mm	50: 2"

- **Voltage**: A: AC220V; B: DC24V; C: AC110V; E: AC24V; F: DC12V
- **Electrical entry**: Blank: Terminal; I: Grommet
- **Thread type**: G: G; T: NPT

Ordering code of accessories

F−2S150 LB

- **Accessories code**: F: Mounting accessories
- **Accessories type**: LB: LB type
- **Valve type**: 2S150: 150 Series body; 2S200: 200 Series body; 2S250: 250 Series body

Note: 320\400\500 series valves do not have mounting accessories.

2S Series (Internally piloted and normally closed)

Flow chart

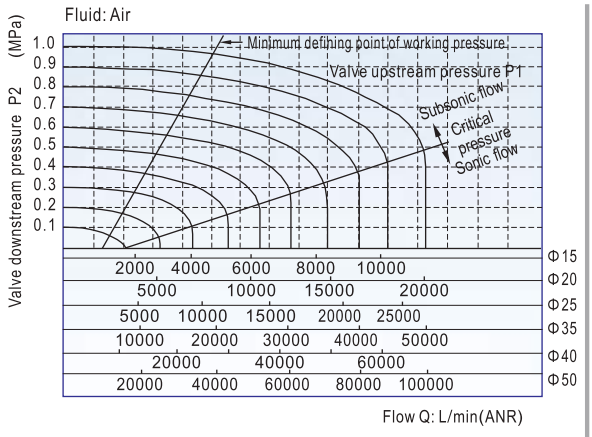

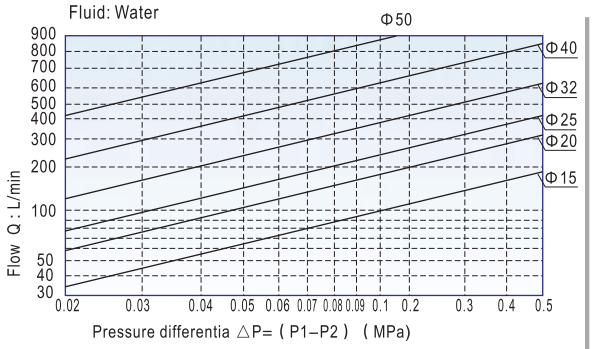

Dimensions

2S150~250(Terminal)

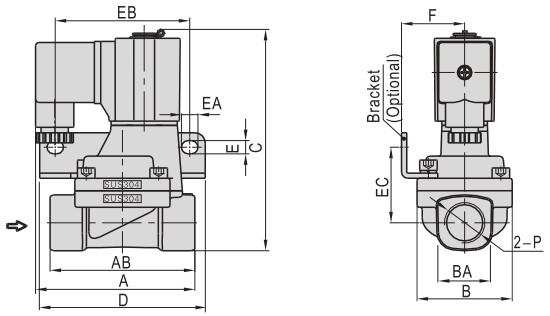

2S320~500(Terminal)

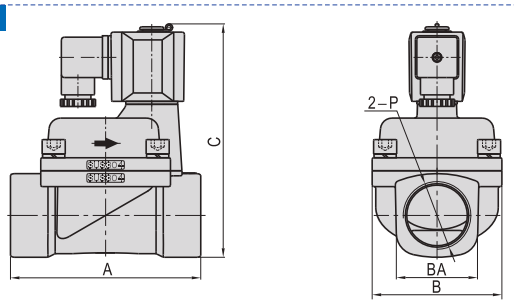

Type\Item	A	AB	B	BA	C	D	E	EA	EB	EC	F	P
2S150−15	77	70	46	27.5	107	80	6.4	8	65	36.5	30.5	1/2"
2S200−20	78.5	82	53	33.5	115.5	90	6.4	8	75	40	34	3/4"
2S250−25	81	92	59	40.5	124	95	6.4	8	80	44.5	36	1"
2S320−32	125	-	80	52	154.5	–	–	–	–	–	–	1 1/4"
2S400−40	132	-	90	58	162	–	–	–	–	–	–	1 1/2"
2S500−50	150	-	100	70	177	–	–	–	–	–	–	2"

2S150~250(Grommet)

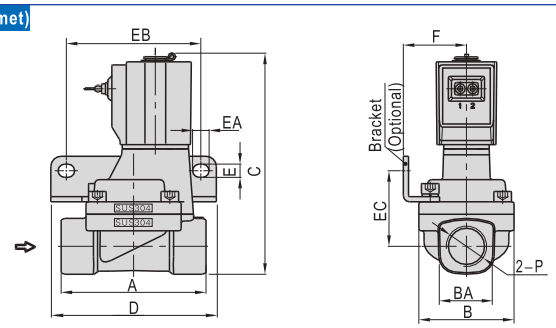

2S320~500(Grommet)

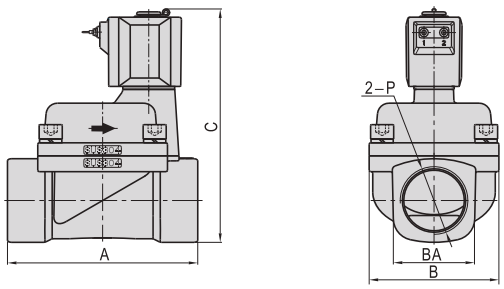

Type\Item	A	B	BA	C	D	E	EA	EB	EC	F	P
2S150−15	70	46	27.5	107	80	6.4	8	65	36.5	30.5	1/2"
2S200−20	82	53	33.5	115.5	90	6.4	8	75	40	34	3/4"
2S250−25	92	59	40.5	124	95	6.4	8	80	44.5	36	1"
2S320−32	125	80	52	154.5	-	–	–	–	–	–	1 1/4"
2S400−40	132	90	58	162	–	–	–	–	–	–	1 1/2"
2S500−50	150	100	70	177	–	–	–	–	–	–	2"

Symbol

Product feature

1. Direct acting and normally opened type 2/2 way solenoid valve. Its high sensibilily allows it to change direction quickly;
2. It has wide pressure range, including extra high pressure (X), high pressure (H), standard and large volume(L) to choose from;
3. It is compact, small size and light weight. It is easy to install and dismantle.
4. The valve body is made of SUS304 . Its coil has a Heat resistance classification of Class B. The standard seal material is FPM-F.Please contact us if other material are required.
5. The protection class of the coil is IP65 and there is a choice for grommet or terminal electrical entry .

Valve's specification

Acting	Direct acting				
Initial stats	Normally closed				
Adaptable fluid ①	Air, Water, Oil				
Viscosity limit	Under 20CST				
Ambient and fluid temperature(℃)		Water	Air	Oil	Ambient
	Max.	80	90	80	70
	Min.	1	−20 ②	−10 ③	−20

① Note: Please refer to P123 for detail of other's fluid.
② Note: Dew point: −20(℃) or less. ③ Note:50CST or less.

Inner structure

2KS030(Terminal)

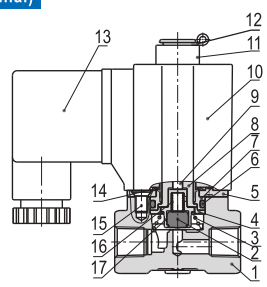

No.	Item	No.	Item	No.	Item
1	Body	7	Fixed cap	13	Connector
2	Airtight ring	8	Electromagnet	14	Washer
3	Spring	9	Man drill	15	Screw
4	Bead flange	10	Coil assembly	16	Spring
5	Fixed plate	11	Position ring	17	Airtight bush
6	O-ring	12	E Clip		

Specification

Type\Item		Port size①	Orifice size (Φmm)	Cv	Valid area or section(mm²)	Weight ②(g)	Max.operating pressure differentia MPa	Max.operating pressure differentia psi	Proof pressure MPa	Proof pressure psi
2KSX030	-06	1/8"	1.5	0.10	1.8	305	2.0	300	3.0	450
	-08	1/4"				295				
2KSH030	-06	1/8"	2.0	0.18	3.0	305	1.5	220		
	-08	1/4"				295				
2KS030	-06	1/8"	3.0	0.33	6.0	305	0.7	100		
	-08	1/4"				295				
2KSL030	-06	1/8"	4.0	0.55	10.0	305	0.4	60		
	-08	1/4"				295				
2KSX050	-10	3/8"	3.0	0.34	6.1	610	2.0	300		
	-15	1/2"				600				
2KSH050	-10	3/8"	4.0	0.55	10.0	610	1.5	220		
	-15	1/2"				600				
2KS050	-10	3/8"	5.0	0.83	15.0	610	0.7	100		
	-15	1/2"				600				
2KSL050	-10	3/8"	7.0	1.40	25.0	610	0.4	60		
	-15	1/2"				600				

① G thread and NPT thread are available.
② The weight in the table is the terminal valve's weight, 2KS030 series grommet valve's weight is 10g less than terminal's. 2KS050series grommet valve's weight is 20g less than terminal's.

Specification of coil

Valve type	Coil type	Power type	Frequency (Hz)	Voltage range	Electrical entry	Power Consumption (VA/W)	Insulation	Temp.rise(℃)
2KS□030	CDA116 CLA116	AC	50	±15%	(Terminal) (CDA)	15.0VA	Class B	50
			60			11.0VA		40
		DC	–	±10%		6.5W		30
2KS□050	CDA170 CLA170	AC	50	±15%	(Grommet) (CLA)	35.0VA		65
			60			30.0VA		60
		DC	–	±10%		10.5W		40

Ordering code

2KS H 030 08 A □ G

Model
2KS: 2/2 way direct-acting and normally opened

Thread type
G: G
T: NPT

Pressure condition
X: Extra high pressure
H: High pressure
Blank: Standard
L: Large volume

Electrical entry
Blank: Terminal
I: Grommet

Size series
030: 030 Series
050: 050 Series

Voltage
A: AC220V
B: DC24V
C: AC110V
E: AC24V
F: DC12V

Port size

Size series	Port size
030 Series	06: 1/8"
	08: 1/4:
050 Series	10: 3/8"
	15: 1/2"

Ordering code of accessories

Ordering code of accessories is the same as 2S series valve's, Please refer to P98 for details of ordering code.

Flow Chart

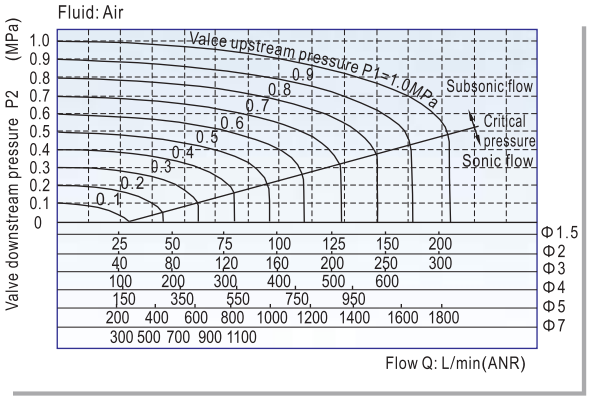

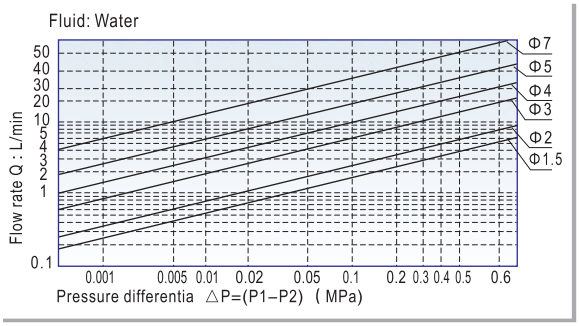

Dimensions

2KS□030(Terminal)

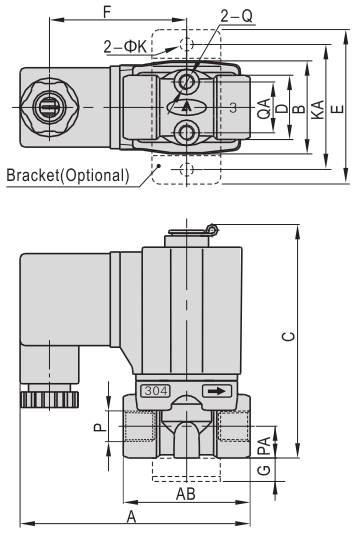

2KS□050(Terminal)

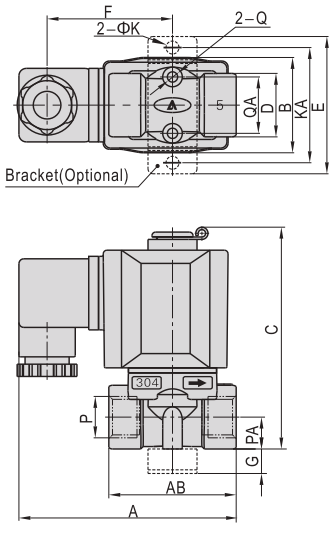

Type\Item	A	AB	B	C	D	E	F	G	K	KA	P	PA	Q	QA
2KS□030−06	72.5	40	29.3	76	20	49	43.5	10	5.3	40	1/8"	10	M5	16
2KS□030−08	72.5	40	29.3	76	20	49	43.5	10	5.3	40	1/4"	10	M5	16
2KS□050−10	89.5	52	39	92	26	56	51	10	5.3	48	3/8"	13	M5	23
2KS□050−15	89.5	52	39	92	26	56	51	10	5.3	48	1/2"	13	M5	23

2KS□030(Grommet)

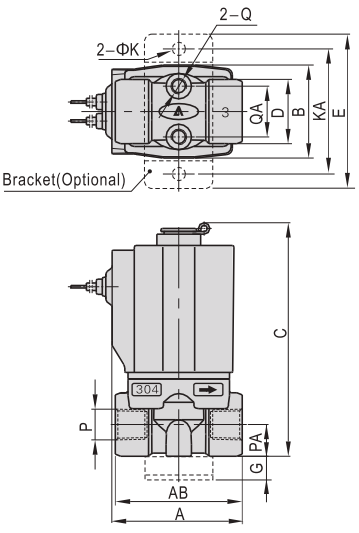

2KS□050(Grommet)

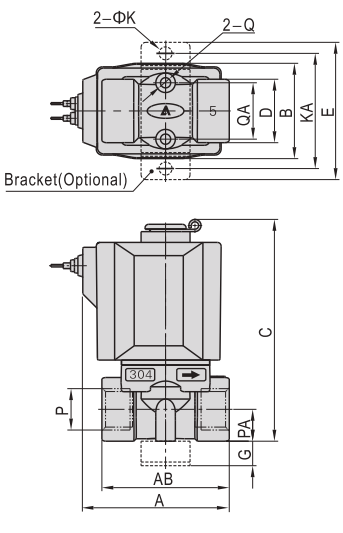

Type\Item	A	AB	B	C	D	E	G	K	KA	PA	P	Q	QA
2KS□030−06	41	40	29.5	76	20	49	10	5.3	40	10	1/8"	M5	16
2KS□030−08	41	40	29.5	76	20	49	10	5.3	40	10	1/4"	M5	16
2KS□050−10	60	52	39	92	26	56	10	5.3	48	13	3/8"	M5	23
2KS□050−15	60	52	39	92	26	56	10	5.3	48	13	1/2"	M5	23

Specification

Type\Item	Port size①	Orifice size (Φmm)	Cv	Valid area or section(mm^2)	Weight ②(g)	Max.operating pressure differentia		Proof pressure	
						MPa	psi	MPa	psi
2KS150–15	1/2"	15.0	5.50	100.0	680	Max:0.7 Min:0.05	Max:100 Min:10	1.5	220
2KS200–20	3/4"	20.0	9.50	170.0	880				
2KS250–25	1"	25.0	12.50	220.0	1125				
2KS320–32	1 1/4"	35.0	23.00	420.0	2710				
2KS400–40	1 1/2"	40.0	31.00	560.0	3260				
2KS500–50	2"	50.0	49.00	880.0	4310				

① G thread and NPT thread are available.
② The weight in the table is the terminal valve's weight, 2S150~250 series grommet valve's weight is 10g less than terminal's. 2S320~5000series grommet valve's weight is 20g less than terminal's.

Symbol

Product feature

1. Indirect acting(Internal pilot) and normally opened type 2/2 way solenoid valve. Its can change direction quickly and has large flow.
2. It is compact, small and light weight. It is easy to install and dismantle;
3. The valve body is made of SUS304 . The coil has a Heat resistance classification of Class B. The standard seal material is FPM-F. Please contact us if other material are required.
4. The protection class of the coil is IP65 and there is a choice for grommet or terminal electrical entry .

Coil specification

Valve type	Coil type	Power type	Frequency (Hz)	Voltage range	Electrical entry	Power Consumption (VA/W)	Insulation	Temp. rise(℃)
2KS150 2KS200 2KS250	CDA116 CLA116	AC	50	±15%	(Terminal) (CDA)	15.0VA	Class B	50
			60			11.0VA		40
		DC	–	±10%		6.5W		30
2KS320 2KS400 2KS500	CDA170 CLA170	AC	50	±15%	(Grommet) (CLA)	35.0VA		65
			60			30.0VA		60
		DC	–	±10%		10.5W		40

Valve's specification

Acting	Intermally piloted				
Initial stats	Normally opened				
Adaptable fluid ①	Air, Water, Oil				
Viscosity limit	Under 20CST				
Ambient and fluid temperature(℃)		Water	Air	Oil	Ambient
	Max.	80	90	80	70
	Min.	1	–20 ②	–10 ③	–20

① Note: Please refer to P123 for detail of other's fluid.
② Note: Dew point: –20(℃) or less. ③ Note: 50CST or less.

Ordering code

2KS 150 15 A □ G

Model
2KS: 2/2 way internally piloted and normally opened

Thread type
G: G
T: NPT

Orifice size
150: Φ15mm
200: Φ20mm
250: Φ25mm
320: Φ35mm
400: Φ40mm
500: Φ50mm

Electrical entry
Blank: Terminal
I: Grommet

Voltage
A: AC220V
B: DC24V
C: AC110V
E: AC24V
F: DC12V

Port size

Orifice size	Port size
Φ15mm	15: 1/2"
Φ20mm	20: 3/4"
Φ25mm	25: 1"
Φ35mm	32: 1 1/4"
Φ40mm	40: 1 1/2"
Φ50mm	50: 2"

Inner structure

2KS150(Grommet)

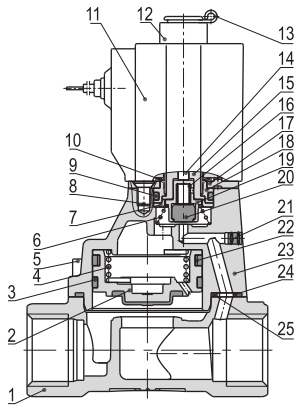

No.	Item	No.	Item	No.	Item	No.	Item
1	Body	8	Screw	15	Movable core	22	Spring
2	Piston	9	O-ring	16	Spring	23	Cover
3	Wear ring	10	Washer	17	Fixed plate	24	Bushing
4	Spring	11	Coil assembly	18	Fixed cap	25	O-ring
5	Screw	12	Position ring	19	Airtight bushing		
6	Spring	13	E Clip	20	Airtight ring		
7	Fixed ring	14	Man drill	21	Plug		

Ordering code of accessories

Ordering code of accessories is the same as 2S series valve's,
Please refer to P100 for details of ordering code.

Note: 320\400\500 series valves do not have mounting accessories.

Flow chart

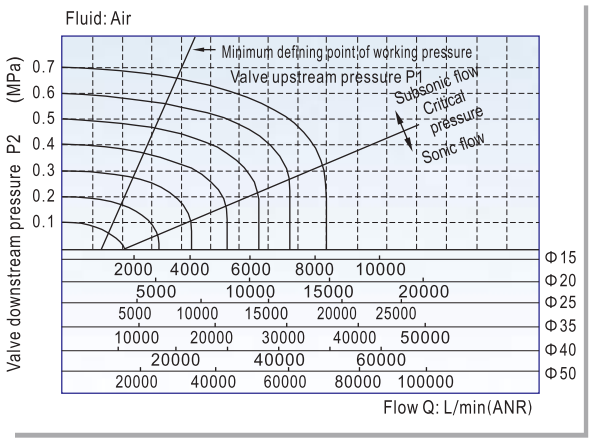

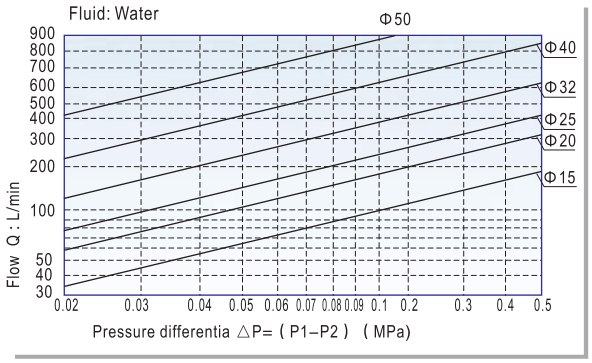

Dimensions

2KS150~250(Terminal)

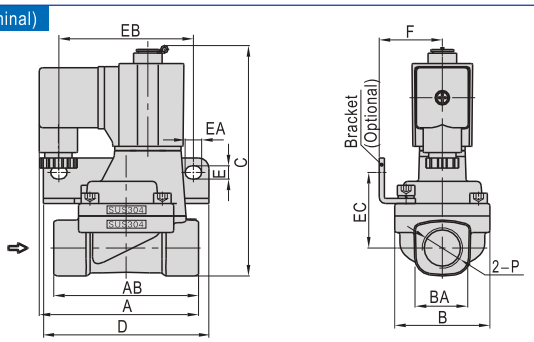

2KS320~500(Terminal)

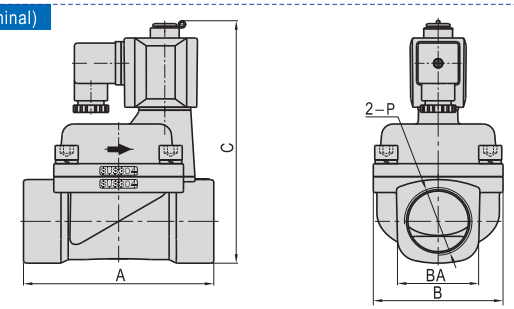

Type\Item	A	AB	B	BA	C	D	E	EA	EB	EC	F	P
2KS150−15	77	70	46	27.5	112.5	80	6.4	8	65	36.5	30.5	1/2"
2KS200−20	78.5	82	53	33.5	121	90	6.4	8	75	40	34	3/4"
2KS250−25	81	92	59	40.5	129.5	95	6.4	8	80	44.5	36	1"
2KS320−32	125	–	80	52	160	–	–	–	–	–	–	1 1/4"
2KS400−40	132	–	90	58	167	–	–	–	–	–	–	1 1/2"
2KS500−50	150	–	100	70	182	–	–	–	–	–	–	2"

2KS150~250(Grommet)

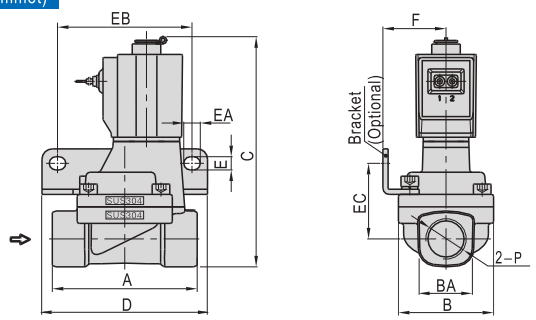

2KS320~500(Grommet)

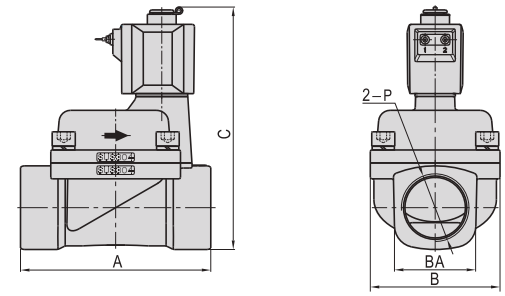

Type\Item	A	B	BA	C	D	E	EA	EB	EC	F	P
2KS150−15	70	46	27.5	112.5	80	6.4	8	65	36.5	30.5	1/2"
2KS200−20	82	53	33.5	121	90	6.4	8	75	40	34	3/4"
2KS250−25	92	59	40.5	129.5	95	6.4	8	80	44.5	36	1"
2KS320−32	125	80	52	160	–	–	–	–	–	–	1 1/4"
2KS400−40	132	90	58	167	–	–	–	–	–	–	1 1/2"
2KS500−50	150	100	70	182	–	–	–	–	–	–	2"

Symbol

Product feature

1. Direct acting and normally closed type 2/2 way solenoid valve. Its high sensibility allows it to change direction quickly;
2. It has wide pressure range, including extra high pressure (X), high pressure (H), standard , large volume(L) and extra large volume (T) to choose from;
3. It is compact, small size and light weight. It is easy to install and dismantle.
4. The valve body is made of brass . Its coil has a Heat resistance classification of Class B. The standard seal material is FPM-F.Please contact us if other material are required.
5. The protection class of the coil is IP65 and there is a choice for grommet or terminal electrical entry .

Valve's specification

Acting	Direct acting				
Initial stats	Normally closed				
Adaptable fluid ①	Air, Water, Oil				
Viscosity limit	Under 20CST				
Ambient and fluid temperature(℃)		Water	Air	Oil	Ambient
	Max.	80	90	80	70
	Min.	1	−20 ②	−10 ③	−20

① Note: Please refer to P123 for detail of other's fluid.
② Note: Dew point: −20(℃) or less. ③ Note: 50CST or less.

Inner structure

2W030(Terminal)

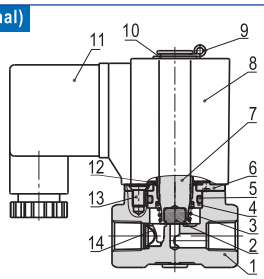

No.	Item	No.	Item	No.	Item
1	Body	6	Fixed plate	11	Connecter
2	Airtight ring	7	Movable core	12	Washer
3	Spring	8	Coil assembly	13	Screw
4	Fixed cap	9	E Clip	14	Filter
5	O-ring	10	Gasket		

① Extra large volume type has no filter element.

Specification

Type\Item		Port size①	Orifice size (Φmm)	Cv	Valid area or section(mm²)	Weight ②(g)	Max.operating pressure differentia		Proof pressure	
							MPa	psi	MPa	psi
2WX030	−06	1/8"	1.5	0.10	1.8	305	3.0	450	5.0	750
	−08	1/4"				295				
2WH030	−06	1/8"	2.0	0.18	3.0	305	2.0	300		
	−08	1/4"				295				
2W030	−06	1/8"	3.0	0.33	6.0	305	1.0	150		
	−08	1/4"				295				
2WL030	−06	1/8"	4.0	0.55	10.0	305	0.5	75		
	−08	1/4"				295				
2WT030	−06	1/8"	6.0	1.10	12.0	305	0.1	15		
	−08	1/4"				295				
2WX050	−10	3/8"	3.0	0.34	6.1	620	3.0	450		
	−15	1/2"				600				
2WH050	−10	3/8"	4.0	0.55	10.0	620	2.0	300		
	−15	1/2"				600				
2W050	−10	3/8"	5.0	0.83	15.0	620	1.0	150		
	−15	1/2"				600				
2WL050	−10	3/8"	7.0	1.40	25.0	620	0.5	75		
	−15	1/2"				600				
2WT050	−10	3/8"	10.0	2.20	40.0	620	0.1	15		
	−15	1/2"				600				

① G thread and NPT thread are available.
② The weight in the table is the terminal valve's weight, 2W030 series grommet valve's weight is 10g less than terminal's. 2W050series grommet valve's weight is 20g less than terminal's.

Specification of coil

Valve type	Coil type	Power type	Frequency (Hz)	Voltage range	Electrical entry	Power Consumption (VA/W)	Insulation	Temp. rise(℃)
2W□030	CDA116 CLA116	AC	50	±15%	Terminal (CDA) Grommet (CLA)	10.0VA	Class B	35
			60			8.0VA		30
		DC	–	±10%		6.5W		30
2W□050	CDA170 CLA170	AC	50	±15%		25.0VA		60
			60			22.0VA		55
		DC	–	±10%		10.5W		40

Ordering code

2W L 030 08 A □ G

Model
2W: 2/2 way direct-acting and normally closed

Thread type
G: G
T: NPT

Pressure condition
X: Extra high pressure
H: High pressure
Blank: Standard
L: Large volume
T: Extra large volume

Electrical entry
Blank: Terminal
I: Grommet

Voltage
A: AC220V
B: DC24V
C: AC110V
E: AC24V
F: DC12V

Size series
030: 030 Series
050: 050 Series

Port size

Size series	Port size
030 Series	06: 1/8"
	08: 1/4"
050 Series	10: 3/8"
	15: 1/2"

Ordering code of accessories

Ordering code of accessories is the same as 2S series valve's, Please refer to P98 for details of ordering code.

2W Series (Direct-acting and normally closed)

Flow chart

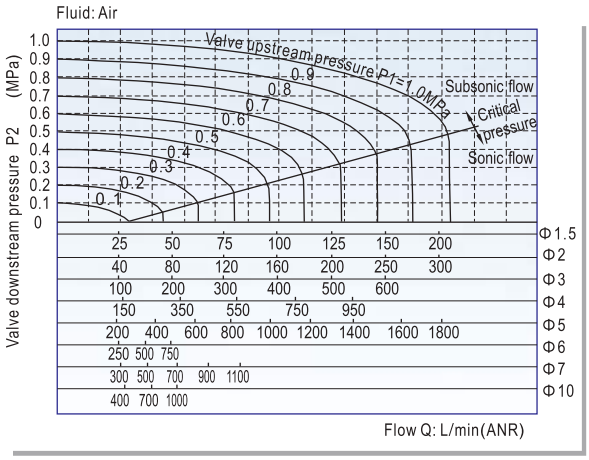

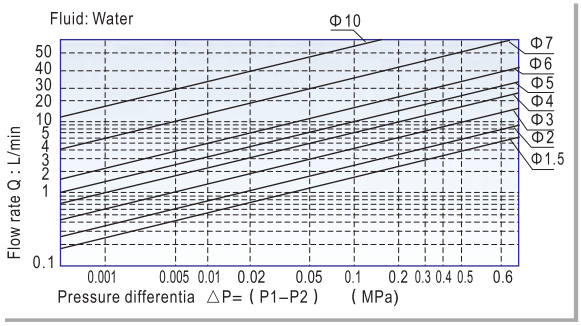

Dimensions

2W□030(Terminal)

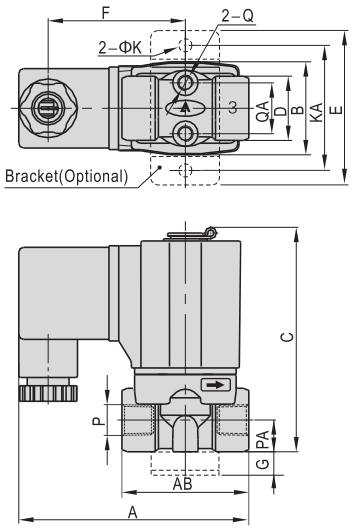

2W□050(Terminal)

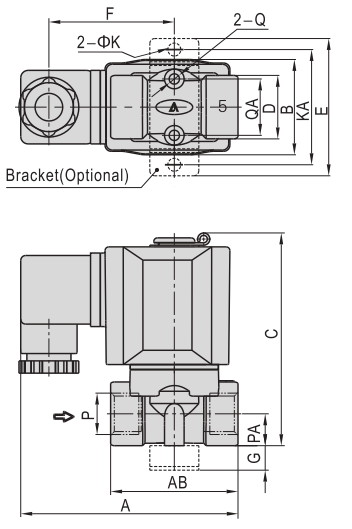

Type\Item	A	AB	B	C	D	E	F	G	K	KA	P	PA	Q	QA
2W□030−06	72.5	40	29.5	71	20	49	43.5	10	5.3	40	1/8"	10	M5	16
2W□030−08	72.5	40	29.5	71	20	49	43.5	10	5.3	40	1/4"	10	M5	16
2W□050−10	89.5	52	39	87	26	56	51	10	5.3	48	3/8"	13	M5	23
2W□050−15	89.5	52	39	87	26	56	51	10	5.3	48	1/2"	13	M5	23

2W□030(Grommet)

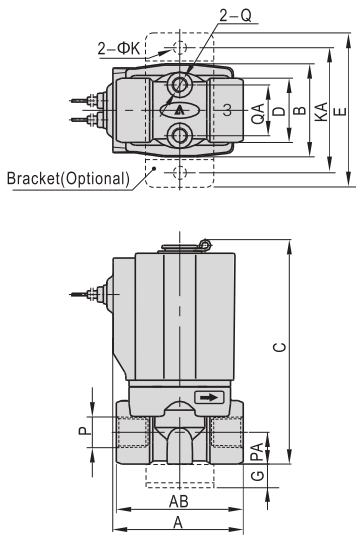

2W□050(Grommet)

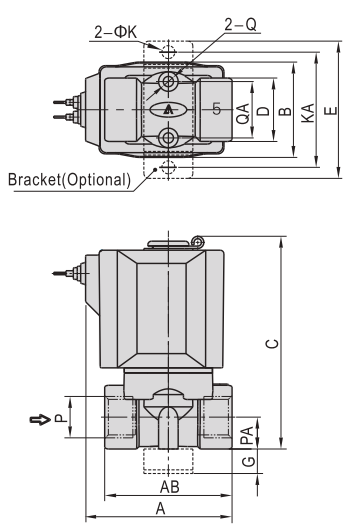

Type\Item	A	AB	B	C	D	E	G	K	KA	P	PA	Q	QA
2W□030−06	41	40	29.5	71	20	49	10	5.3	40	1/8"	10	M5	16
2W□030−08	41	40	29.5	71	20	49	10	5.3	40	1/4"	10	M5	16
2W□050−10	60	52	39	87	26	56	10	5.3	48	3/8"	13	M5	23
2W□050−15	60	52	39	87	26	56	10	5.3	48	1/2"	13	M5	23

2W

Symbol

Product feature

1. Indirect acting(Internal pilot) and normally closed type 2/2 way solenoid valve. Its can change direction quickly and has large flow.
2. It is compact, small and light weight. It is easy to install and dismantle;
3. The valve body is made of brass . The coil has a Heat resistance classification of Class B. The standard seal material is FPM-F. Please contact us if other material are required.
4. The protection class of the coil is IP65 and there is a choice for grommet or terminal electrical entry .

Valve's specification

Acting	Internally piloted				
Initial stats	Normally closed				
Adaptable fluid ①	Air, Water, Oil				
Viscosity limit	Under 20CST				
Ambient and fluid temperature(℃)		Water	Air	Oil	Ambient
	Max.	80	90	80	70
	Min.	1	−20 ②	−10 ③	−20

① Note: Please refer to P123 for detail of other's fluid.
②Note: Dew point: −20(℃) or less. ③ Note: 50CST or less.

Inner structure

2W150(Grommet)

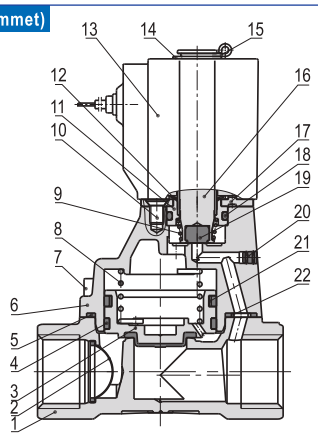

No.	Item	No.	Item	No.	Item	No.	Item
1	Body	7	Screw	13	Coil assembly	19	Airtight ring
2	Filter	8	Spring	14	Washer	20	Plug
3	Piston	9	Spring	15	E Clip	21	Spring
4	Wear ring	10	Screw	16	Movable core	22	Spacer
5	O-ring	11	Fixed cap	17	Fixed plate		
6	Cover	12	Washer	18	O-ring		

Specification

Type\Item	Port size①	Orifice size (Φmm)	Cv	Valid area or section(mm²)	Weight ②(g)	Max.operating pressure differentia		Proof pressure	
						MPa	psi	MPa	psi
2W150−15	1/2"	15.0	5.50	100.0	720	Max:1.0 Min:0.05	Max:150 Min:10	1.5	220
2W200−20	3/4"	20.0	9.50	170.0	950				
2W250−25	1"	25.0	12.50	220.0	1200				

① G thread and NPT thread are available.
② The weight in the table is the terminal valve's weight, grommet valve's weight is 10g less than terminal's.

Specification of coil

Valve type	Coil type	Power type	Frequency (Hz)	Voltage range	Electrical entry	Power Consumption (VA/W)	Insulation	Temp. rise(℃)
2W150 2W200 2W250	CDA116 CLA116	AC	50	±15%	Terminal (CDA) Grommet (CLA)	10.0VA	Class B	35
			60			8.0VA		30
		DC	–	±10%		6.5W		30

Ordering code

2W 150 15 A □ G

Model
2W: 2/2 way internally piloted and normally closed

Thread type
G: G
T: NPT

Orifice size
150: Φ15mm
200: Φ20mm
250: Φ25mm

Electrical entry
Blank: Terminal
I: Grommet

Port size

Orifice size	Port size
Φ15mm	15: 1/2"
Φ20mm	20: 3/4"
Φ25mm	25: 1"

Voltage
A: AC220V
B: DC24V
C: AC110V
E: AC24V
F: DC12V

Ordering code of accessories

Ordering code of accessories is the same as 2S series valve's, Please refer to P100 for details of ordering code.

2W Series (Internally piloted and normally closed)

Flow chart

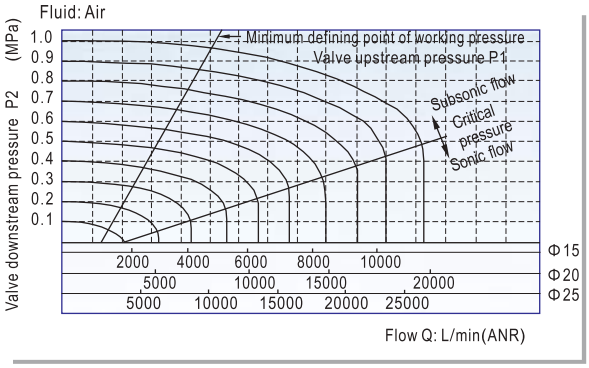

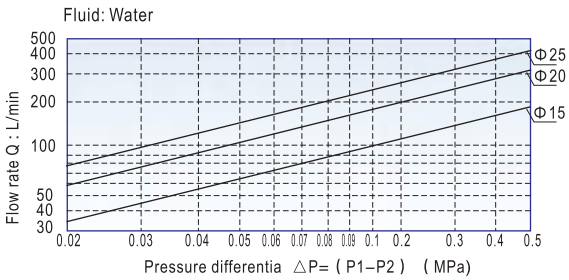

Dimensions

Terminal

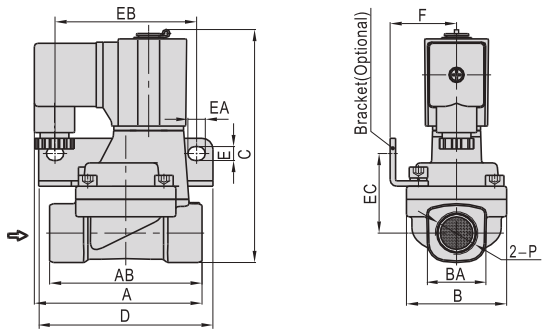

Type\Item	A	AB	B	BA	C	D	E	EA	EB	EC	F	P
2W150−15	77	70	46	27.5	107	80	6.4	8	65	36.5	30.5	1/2"
2W200−20	78.5	82	53	33.5	115.5	90	6.4	8	75	40	34	3/4"
2W250−25	81	92	59	40.5	124	95	6.4	8	80	44.5	36	1"

Grommet

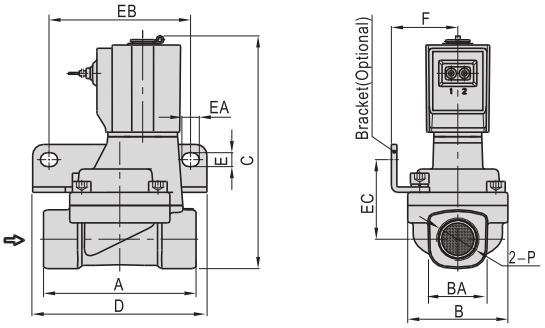

Type\Item	A	B	BA	C	D	E	EA	EB	EC	F	P
2W150−15	70	46	27.5	107	80	6.4	8	65	36.5	30.5	1/2"
2W200−20	82	53	33.5	115.5	90	6.4	8	75	40	34	3/4"
2W250−25	92	59	40.5	124	95	6.4	8	80	44.5	36	1"

2KW

Symbol

Product feature

1. Direct acting and normally opened type 2/2 way solenoid valve. Its high sensibility allows it to change direction quickly;
2. It has wide pressure range, including extra high pressure (X), high pressure (H), standard and large volume(L) to choose from;
3. It is compact, small size and light weight. It is easy to install and dismantle.
4. The valve body is made of brass . Its coil has a Heat resistance classification of Class B. The standard seal material is FPM-F.Please contact us if other material are required.
5. The protection class of the coil is IP65 and there is a choice for grommet or terminal electrical entry .

Valve's specification

Acting	Direct acting				
Initial stats	Normally opened				
Adaptable fluid ①	Air, Water, Oil				
Viscosity limit	Under 20CST				
Ambient and fluid temperature(℃)		Water	Air	Oil	Ambient
	Max.	80	90	80	70
	Min.	1	−20 ②	−10 ③	−20

① Note: Please refer to P123 for detail of other's fluid.
② Note: Dew point:−20(℃) or less. ③ Note: 50CST or less.

Inner structure

2KW030(Grommet)

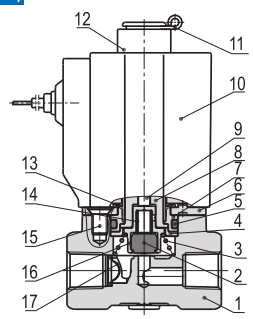

No.	Item	No.	Item	No.	Item
1	Body	7	Fixed cap	13	Washer
2	Airtight ring	8	Electromagnet	14	Spring
3	Spring	9	Man dril	15	Screw
4	Bead flange	10	Coil assembly	16	Airtight bush
5	O-ring	11	E Clip	17	Filter
6	Fixed plate	12	Position ring		

Specification

Type\Item		Port size①	Orifice size (Φmm)	Cv	Valid area or section(mm^2)	Weight ②(g)	Max.operating pressure differentia		Proof pressure	
							MPa	psi	MPa	psi
2KWX030	−06	1/8"	1.5	0.10	1.8	315	2.0	300	3.0	450
	−08	1/4"				305				
2KWH030	−06	1/8"	2.0	0.18	3.0	315	1.5	220		
	−08	1/4"				305				
2KW030	−06	1/8"	3.0	0.33	6.0	315	0.7	100		
	−08	1/4"				305				
2KWL030	−06	1/8"	4.0	0.55	10.0	315	0.4	60		
	−08	1/4"				305				
2KWX050	−10	3/8"	3.0	0.34	6.1	635	2.0	300		
	−15	1/2"				615				
2KWH050	−10	3/8"	4.0	0.55	10.0	635	1.5	220		
	−15	1/2"				615				
2KW050	−10	3/8"	5.0	0.83	15.0	635	0.7	100		
	−15	1/2"				615				
2KWL050	−10	3/8"	7.0	1.40	25.0	635	0.4	60		
	−15	1/2"				615				

① G thread and NPT thread are available.
② The weight in the table is the terminal valve's weight, 2KW030 series grommet valve's weight is 10g less than terminal's. 2KW050series grommet valve's weight is 20g less than terminal's.

Specification of coil

Valve type	Coil type	Power type	Frequency (Hz)	Voltage range	Electrical entry	Power Consumption (VA/W)	Insulation	Temp. rise(℃)
2KW□030	CDA116 CLA116	AC	50	±15%	Terminal (CDA) Grommet (CLA)	15.0VA	Class B	50
			60			11.0VA		40
		DC	–	±10%		6.5W		30
2KW□050	CDA170 CLA170	AC	50	±15%		35.0VA		65
			60			30.0VA		60
		DC	–	±10%		10.5W		40

Ordering code

2KW H 030 08 A □ G

Model
2KW: 2/2 way direct-acting and normally opened

Thread type
G: G
T: NPT

Pressure condition
X: Extra high pressure
H: High pressure
Blank: Standard
L: Large volume

Electrical entry
Blank: Terminal
I: Grommet

Size series
030: 030 Series
050: 050 Series

Voltage
A: AC220V
B: DC24V
C: AC110V
E: AC24V
F: DC12V

Port size

Size series	Port size
030 Series	06: 1/8"
	08: 1/4"
050 Series	10: 3/8"
	15: 1/2"

Ordering code of accessories

Ordering code of accessories is the same as 2S series valve's, Please refer to P98 for details of ordering code.

Flow chart

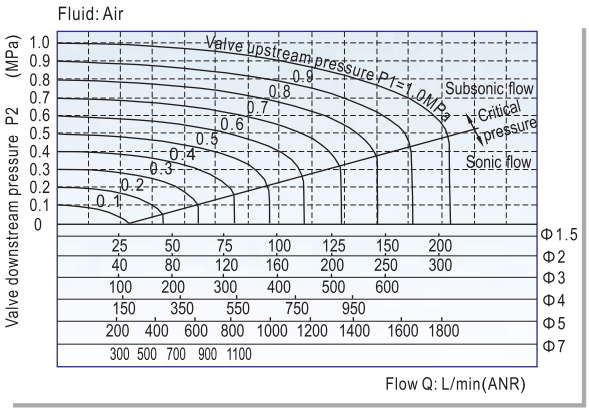

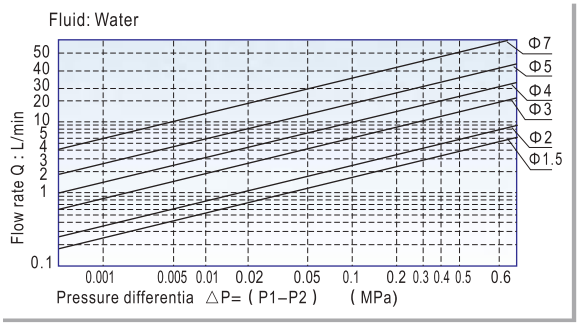

Dimensions

2KW□030(Terminal)

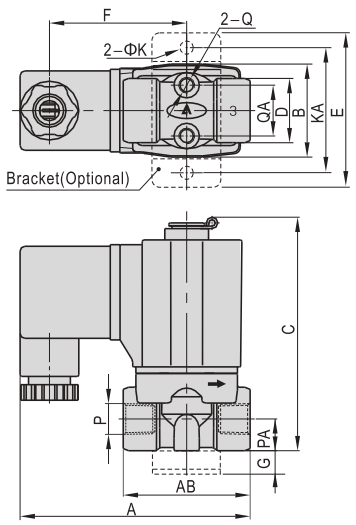

2KW□050(Terminal)

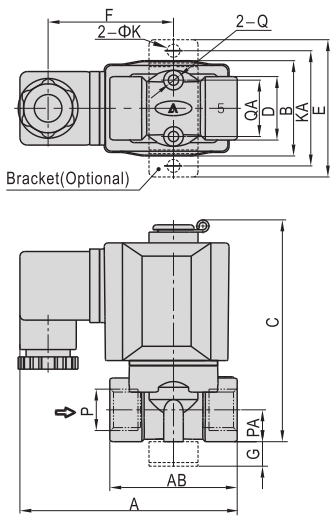

Type\Item	A	AB	B	C	D	E	F	G	K	KA	P	PA	Q	QA
2KW□030−06	72.5	40	29.3	76	20	49	43.5	10	5.3	40	1/8"	10	M5	16
2KW□030−08	72.5	40	29.3	76	20	49	43.5	10	5.3	40	1/4"	10	M5	16
2KW□050−10	89.5	52	39	92	26	56	51	10	5.3	48	3/8"	13	M5	23
2KW□050−15	89.5	52	39	92	26	56	51	10	5.3	48	1/2"	13	M5	23

2KW□030(Grommet)

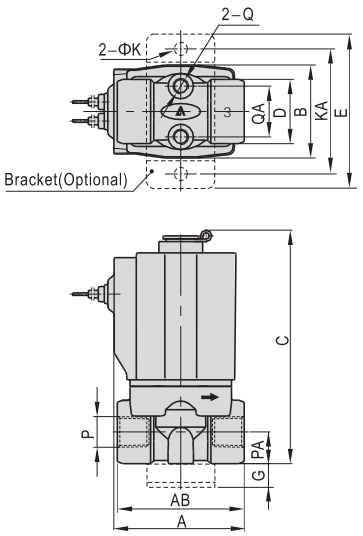

2KW□050(Grommet)

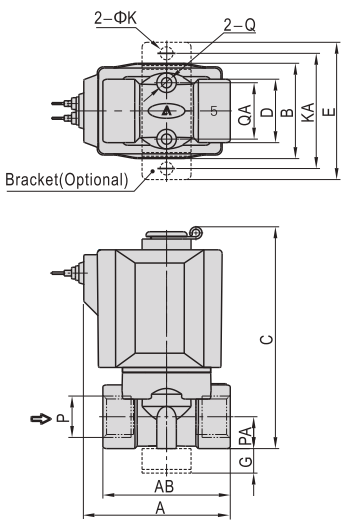

Type\Item	A	AB	B	C	D	E	G	K	KA	PA	P	Q	QA
2KW□030−06	41	40	29.5	76	20	49	10	5.3	40	10	1/8"	M5	16
2KW□030−08	41	40	29.5	76	20	49	10	5.3	40	10	1/4"	M5	16
2KW□050−10	60	52	39	92	26	56	10	5.3	48	13	3/8"	M5	23
2KW□050−15	60	52	39	92	26	56	10	5.3	48	13	1/2"	M5	23

2KW

Symbol

Product feature

1. Indirect acting(Internal pilot) and normally opened type 2/2 way solenoid valve. Its can change direction quickly and has large flow.
2. It is compact, small and light weight. It is easy to install and dismantle;
3. The valve body is made of brass . The coil has a Heat resistance classification of Class B. The standard seal material is FPM-F. Please contact us if other material are required.
4. The protection class of the coil is IP65 and there is a choice for grommet or terminal electrical entry .

Valve's specification

Acting	Internally piloted				
Initial stats	Normally opened				
Adaptable fluid ①	Air, Water, Oil				
Viscosity limit	Under 20CST				
Ambient and fluid temperature(℃)		Water	Air	Oil	Ambient
	Max.	80	90	80	70
	Min.	1	−20 ②	−10 ③	−20

① Note: Please refer to P123 for detail of other's fluid.
② Note: Dew point: −20(℃) or less. ③ Note: 50CST or less.

Inner structure

2KW150(Terminal)

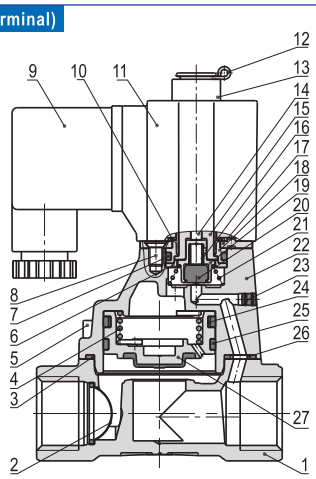

No.	Item	No.	Item	No.	Item	No.	Item
1	Body	8	Screw	15	Movable core	22	Cover
2	Filter	9	Connector	16	Spring	23	Plug
3	O-ring	10	Washer	17	Fixed plate	24	Bonnet spring
4	Spring	11	Coil assembly	18	Fixed cap	25	Wear ring
5	Screw	12	E Clip	19	Airtight bushing	26	Bushing
6	Clip	13	Position ring	20	Airtight ring	27	Piston
7	O-ring	14	Man drill	21	Spring		

Specification

Type\Item	Port size①	Orifice size (Φmm)	Cv	Valid area or section(mm^2)	Weight ②(g)	Max.operating pressure differentia		Proof pressure	
						MPa	psi	MPa	psi
2KW150−15	1/2"	15.0	5.50	100.0	730	Max:0.7 Min:0.05	Max:100 Min:10	1.5	220
2KW200−20	3/4"	20.0	9.50	170.0	960				
2KW250−25	1"	25.0	12.50	220.0	1210				

① G thread and NPT thread are available.
② The weight in the table is the terminal valve's weight, grommet valve's weight is 10g less than terminal's.

Specification of coil

Valve type	Coil type	Power type	Frequency (Hz)	Voltage range	Electrical entry	Power Consumption (VA/W)	Insulation	Temp. rise(℃)
2KW150 2KW200 2KW250	CDA116 CLA116	AC	50	±15%	Terminal (CDA) Grommet (CLA)	15.0VA	Class B	50
			60			11.0VA		40
		DC	−	±10%		6.5W		30

Ordering code

2KW 150 15 A □ G

Model
2KW: 2/2 way internally piloted and normally opened

Orifice size
150: Φ15mm
200: Φ20mm
250: Φ25mm

Thread type
G: G
T: NPT

Electrical entry
Blank: Terminal
I: Grommet

Port size

Orifice size	Port size
Φ15mm	15: 1/2"
Φ20mm	20: 3/4"
Φ25mm	25: 1"

Voltage
A: AC220V
B: DC24V
C: AC110V
E: AC24V
F: DC12V

Ordering code of accessories

Ordering code of accessories is the same as 2S series valve's, Please refer to P100 for details of ordering code.

Flow chart

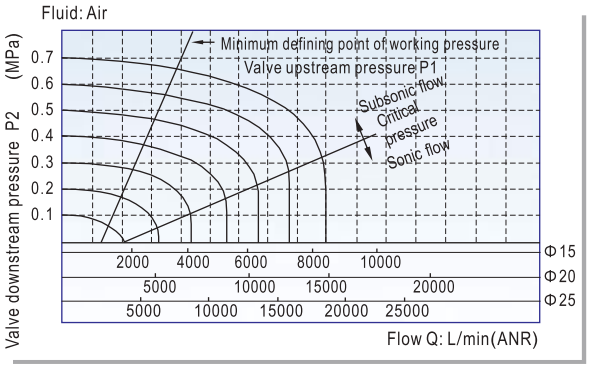

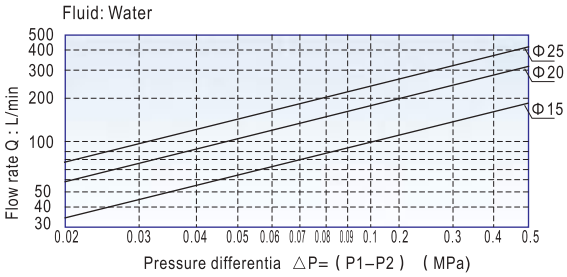

Dimensions

Terminal

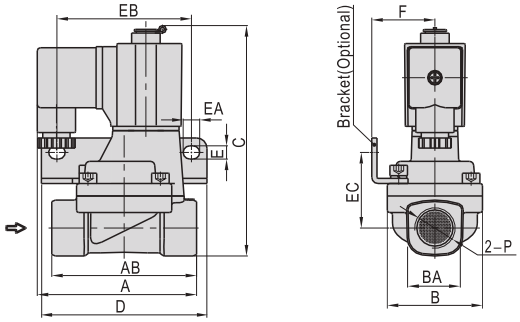

Type\Item	A	AB	B	BA	C	D	E	EA	EB	EC	F	P
2KW150–15	77	70	46	27.5	112.5	80	6.4	8	65	36.5	30.5	1/2"
2KW200–20	78.5	82	53	33.5	121	90	6.4	8	75	40	34	3/4"
2KW250–25	81	92	59	40.5	129.5	95	6.4	8	80	44.5	36	1"

Grommet

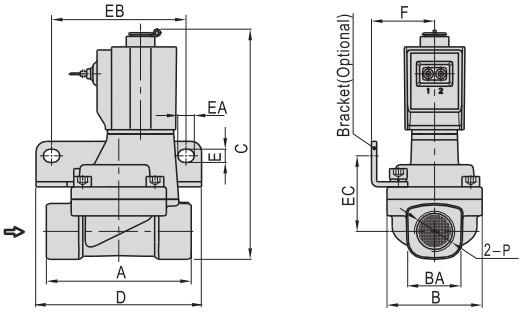

Type\Item	A	B	BA	C	D	E	EA	EB	EC	F	P
2KW150–15	70	46	27.5	112.5	80	6.4	8	65	36.5	30.5	1/2"
2KW200–20	82	53	33.5	121	90	6.4	8	75	40	34	3/4"
2KW250–25	92	59	40.5	129.5	95	6.4	8	80	44.5	36	1"

Symbol

Product feature

1. Direct acting and normally closed type 2/2 way solenoid valve. Its high sensibility allows it to change direction quickly;
2. It has wide pressure range, including standard high pressure (H) to choose from;
3. It is compact, small size and light weight. It is easy to install and dismantle.
4. The valve body is made of SUS304 . Its coil has a Heat resistance classification of Class H. The standard seal material is PTFE(Teflon) which is suitable for a variety of working medium such as water with high temperature and vapour.
5. The protection class of the coil is IP65 and there is a choice for grommet or terminal electrical entry .

Valve's specification

Acting		Direct acting			
Initial stats		Normally closed			
Adaptable fluid ①		Steam, High temperature Water, Oil			
Viscosity limit		Under 20CST			
Ambient and fluid temperature(℃)		Oil	Water	Steam	Ambient
	Max.	150	150	183	100
	Min.	-10②	1	-	-20

① Note: Please refer to P123 for detail of other's fluid.
② Note: 50CST or less.

Inner structure

2L030(Terminal)

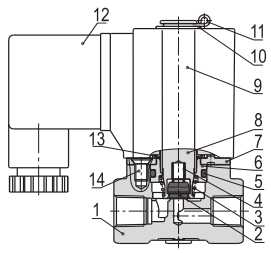

No.	Item	No.	Item	No.	Item
1	Body	6	Fixed cap	11	E Clip
2	Airtight ring	7	Fixed plate	12	Connector
3	Spring	8	Movable core	13	Bead flange
4	Spring	9	Coil assembly	14	Screw
5	O-ring	10	Washer		

Specification

Type\Item		Port size①	Orifice size (Φmm)	Cv	Valid area or section(mm^2)	Weight ②(g)	Max.operating pressure differentia		Proof pressure	
							MPa	psi	MPa	psi
2LH030	-06	1/8"	2.0	0.18	3.0	300	2.0	300	3.0	450
	-08	1/4"				290				
2L030	-06	1/8"	3.0	0.33	6.0	300	1.0	150		
	-08	1/4"				290				
2LH050	-10	3/8"	4.0	0.55	10.0	600	2.0	300		
	-15	1/2"				590				
2L050	-10	3/8"	5.0	0.83	15.0	600	1.0	150		
	-15	1/2"				590				

① G thread and NPT thread are available.
② The weight in the table is the terminal valve's weight, 2L030 series grommet valve's weight is 10g less than terminal's. 2L050series grommet valve's weight is 20g less than terminal's.

Specification of coil

Valve type	Coil type	Power type	Frequency (Hz)	Voltage range	Electrical entry	Power Consumption (VA/W)	Insulation	Temp. rise(℃)
2L□030	CDA116 CLA116	AC	50	±15%	Terminal (CDA) Grommet (CLA)	10.0VA	Class H	35
			60			8.0VA		30
		DC	-	±10%		6.5W		30
2L□050	CDA170 CLA170	AC	50	±15%		25.0VA		60
			60			22.0VA		55
		DC	-	±10%		10.5W		40

Ordering code

2L H 030 08 A □ G

- **Model**: 2L: 2/2 way direct-acting and normally closed
- **Pressure condition**: H: High pressure; Blank: Standard
- **Size series**: 030: 030 Series; 050: 050 Series
- **Port size**

Size series	Port size
030 Series	06: 1/8"
	08: 1/4"
050 Series	10: 3/8"
	15: 1/2"

- **Voltage**: A: AC220V; B: DC24V; C: AC110V; E: AC24V; F: DC12V
- **Electrical entry**: Blank: Terminal; I: Grommet
- **Thread type**: G: G; T: NPT

Ordering code of accessories

Ordering code of accessories is the same as 2S series valve's, Please refer to P98 for details of ordering code.

Flow chart

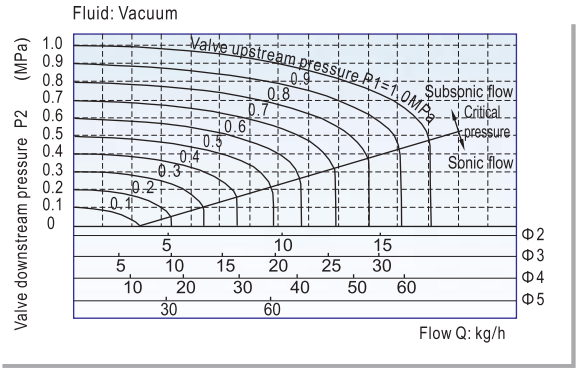

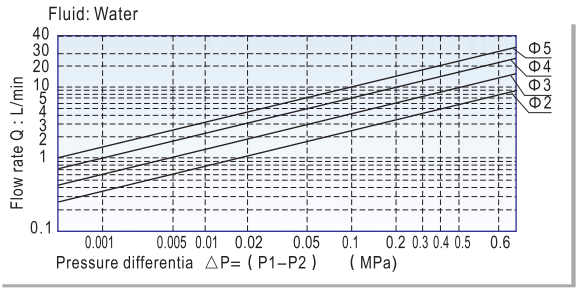

Dimensions

2L□030(Terminal)

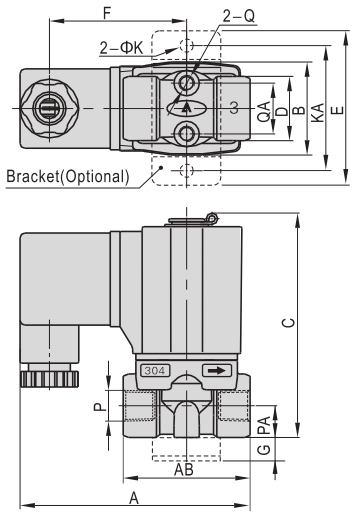

2L□050(Terminal)

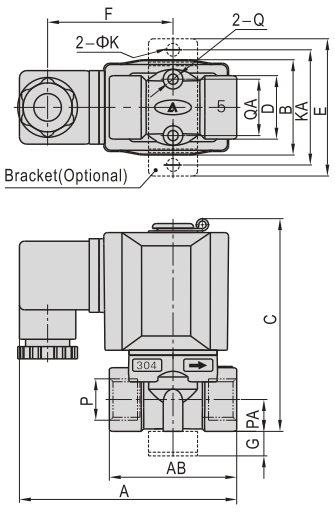

Type\Item	A	AB	B	C	D	E	F	G	K	KA	P	PA	Q	QA
2L□030−06	72.5	40	29.5	71	20	49	43.5	10	5.3	40	1/8"	10	M5	16
2L□030−08	72.5	40	29.5	71	20	49	43.5	10	5.3	40	1/4"	10	M5	16
2L□050−10	89.5	52	39	87	26	56	51	10	5.3	48	3/8"	13	M5	23
2L□050−15	89.5	52	39	87	26	56	51	10	5.3	48	1/2"	13	M5	23

2L□030(Grommet)

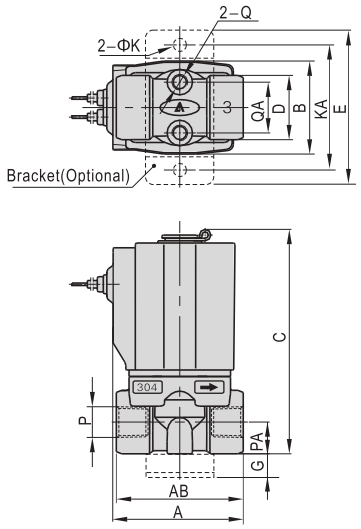

2L□050(Grommet)

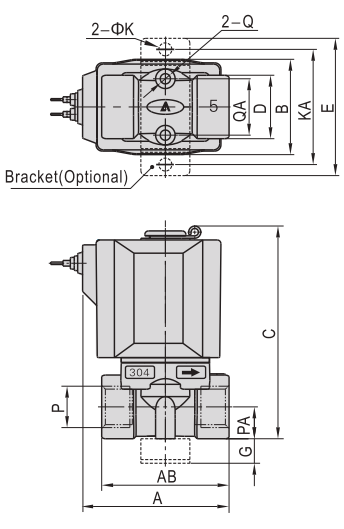

Type\Item	A	AB	B	C	D	E	G	K	KA	P	PA	Q	QA
2L□030−06	41	40	29.5	71	20	49	10	5.3	40	1/8"	10	M5	16
2L□030−08	41	40	29.5	71	20	49	10	5.3	40	1/4"	10	M5	16
2L□050−10	60	52	39	87	26	56	10	5.3	48	3/8"	13	M5	23
2L□050−15	60	52	39	87	26	56	10	5.3	48	1/2"	13	M5	23

Specification

Type\Item	Port size①	Orifice size (Φmm)	Cv	Valid area or section(mm^2)	Weight ②(g)	Max.operating pressure differentia		Proof pressure	
						MPa	psi	MPa	psi
2L150–15	1/2"	15.0	5.50	100.0	675	Max:1.0 Min:0.05	Max:150 Min:10	1.5	220
2L200–20	3/4"	20.0	9.50	170.0	875				
2L250–25	1"	25.0	12.50	220.0	1120				
2L320–32	1 1/4"	35.0	23.00	420.0	2700				
2L400–40	1 1/2"	40.0	31.00	560.0	3250				
2L500–50	2"	50.0	49.00	880.0	4300				

① G thread and NPT thread are available.
② The weight in the table is the terminal valve's weight, 2L150~250series grommet valve's weight is 10g less than terminal's. 2L320~500series grommet valve's weight is 20g less than terminal's.

Symbol

Product feature

1. Indirect acting(Internal pilot) and normally closed type 2/2 way solenoid valve. Its high sensibility allows it to change direction quickly.
2. It is compact, small size and light weight. It is easy to install and dismantle.
3. The valve body is made of SUS304 . Its coil has a Heat resistance classification of Class H. The standard seal material is PTFE(Teflon) which is suitable for a variety of working medium such as water with high temperature and vapour.
4. The protection class of the coil is IP65 and there is a choice for grommet or terminal electrical entry .

Valve's specification

Acting	Internally piloted				
Initial stats	Normally closed				
Adaptable fluid ①	Steam, High temperature Water, Oil				
Viscosity limit	Under 20CST				
Ambient and fluid temperature(℃)		Oil	Water	Steam	Ambient
	Max.	150	150	183	100
	Min.	-10②	1	-	–20

①Note:Please refer to P123 for detail of other's fluid;
②Note:50CST or less.

Inner structure

2L150(Grommet)

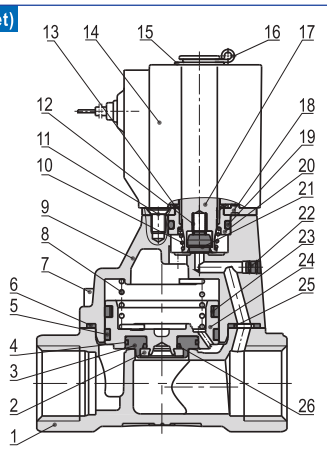

No.	Item	No.	Item	No.	Item
1	Body	10	Spring	19	O-ring
2	Fixed ring	11	Screw	20	Fixed plate
3	Airtight bush	12	Spring	21	Airtight ring
4	O-ring	13	Bead flange	22	Spring
5	Wear ring	14	Coil assembly	23	Plug
6	Gasket	15	Washer	24	Piston
7	Screw	16	E Clip	25	Bushing
8	Spring	17	Movable core	26	O-ring
9	Cover	18	Fixed plate		

Specification of coil

Valve type	Coil type	Power type	Frequency (Hz)	Voltage range	Electrical entry	Power Consumption (VA/W)	Insulation	Temp. rise(℃)
2L150 2L200 2L250	CDA116 CLA116	AC	50	±15%	Terminal (CDA)	10.0VA	Class H	35
			60			8.0VA		30
		DC	–	±10%		6.5W		30
2L320 2L400 2L500	CDA170 CLA170	AC	50	±15%	Grommet (CLA)	25.0VA		60
			60			22.0VA		55
		DC	–	±10%		10.5W		40

Ordering code

2L 150 15 A □ G

Model
2L: 2/2 way internally piloted and normally closeded

Orifice size

150: Φ15mm
200: Φ20mm
250: Φ25mm
320: Φ35mm
400: Φ40mm
500: Φ50mm

Port size

Orifice size	Port size
Φ15mm	15: 1/2"
Φ20mm	20: 3/4"
Φ25mm	25: 1"
Φ35mm	32: 1 1/4"
Φ40mm	40: 1 1/2"
Φ50mm	50: 2"

Voltage

A: AC220V
B: DC24V
C: AC110V
E: AC24V
F: DC12V

Electrical entry

Blank: Terminal
I: Grommet

Thread type

G: G
T: NPT

Ordering code of accessories

Ordering code of accessories is the same as 2S series valve's, Please refer to P100 for details of ordering code.

Note: 320\400\500 series valves do not have mounting accessories.

2L Series (Internally piloted and normally closed)

Flow chart

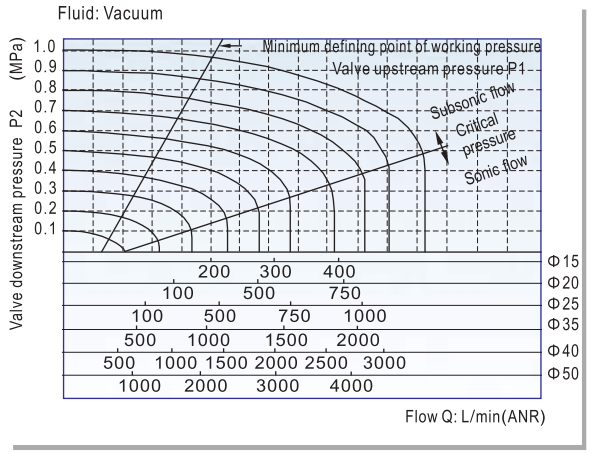

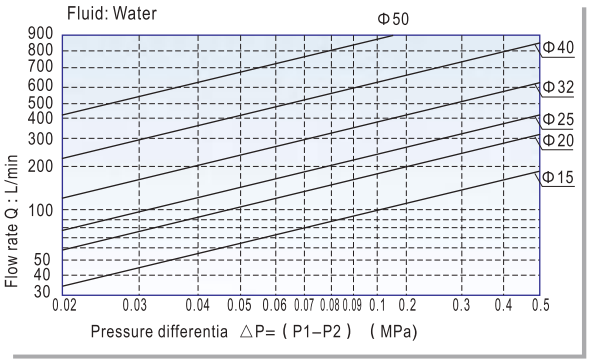

Dimensions

2L150~250(Terminal)

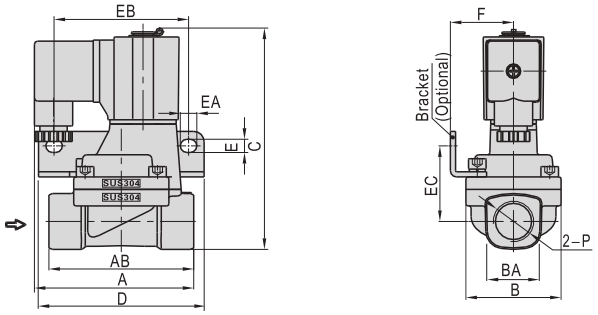

2L320~500(Terminal)

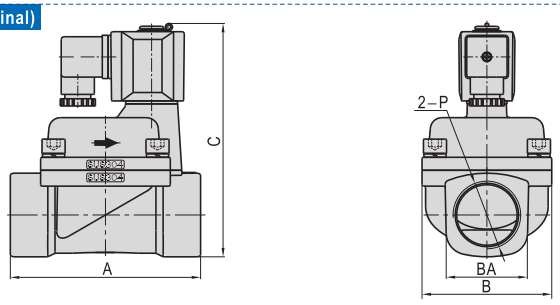

Type\Item	A	AB	B	BA	C	D	E	EA	EB	EC	F	P
2L150−15	77	70	46	27.5	107	80	6.4	8	65	36.5	30.5	1/2"
2L200−20	78.5	82	53	33.5	115.5	90	6.4	8	75	40	34	3/4"
2L250−25	81	92	59	40.5	124	95	6.4	8	80	44.5	36	1"
2L320−32	125	-	80	52	154.5	–	–	–	–	–	–	1 1/4"
2L400−40	132	-	90	58	162	–	–	–	–	–	–	1 1/2"
2L500−50	150	-	100	70	177	–	–	–	–	–	–	2"

2L150~250(Grommet)

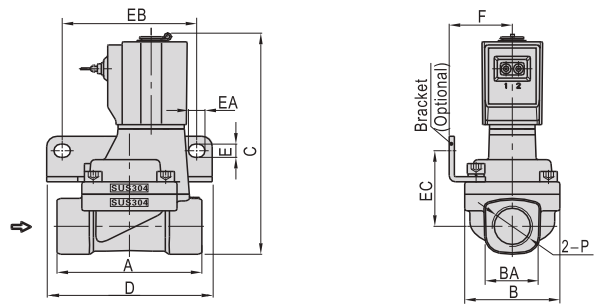

2L320~500(Grommet)

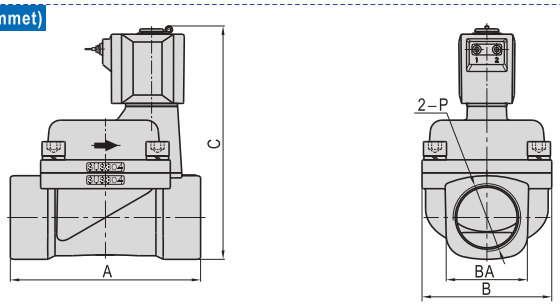

Type\Item	A	B	BA	C	D	E	EA	EB	EC	F	P
2L150−15	70	46	27.5	107	80	6.4	8	65	36.5	30.5	1/2"
2L200−20	82	53	33.5	115.5	90	6.4	8	75	40	34	3/4"
2L250−25	92	59	40.5	124	95	6.4	8	80	44.5	36	1"
2L320−32	125	80	52	154.5	-	–	–	–	–	–	1 1/4"
2L400−40	132	90	58	162	–	–	–	–	–	–	1 1/2"
2L500−50	150	100	70	177	–	–	–	–	–	–	2"

Symbol

Product feature

1. Direct acting and normally opened type 2/2 way solenoid valve. Its high sensibility allows it to change direction quickly;
2. It has wide pressure range, including standard high pressure (H) to choose from;
3. It is compact, small size and light weight. It is easy to install and dismantle.
4. The valve body is made of SUS304 . Its coil has a Heat resistance classification of Class H. The standard seal material is PTFE(Teflon) which is suitable for a variety of working medium such as water with high temperature and vapour.
5. The protection class of the coil is IP65 and there is a choice for grommet or terminal electrical entry .

Valve's specification

Acting		Direct acting			
Initial stats		Normally opened			
Adaptable fluid ①		Steam, High temperature Water, Oil			
Viscosity limit		Under 20CST			
Ambient and fluid temperature(℃)		Oil	Water	Steam	Ambient
	Max.	150	150	183	100
	Min.	-10②	1	-	−20

① Note: Please refer to P123 for detail of other's fluid.
② Note: 50CST or less.

Inner structure

2KL030(Terminal)

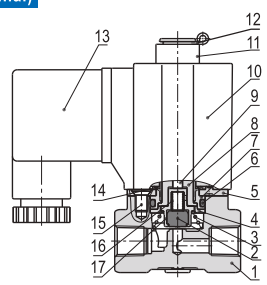

No.	Item	No.	Item	No.	Item
1	Body	7	Fixed cap	13	Connector
2	Airtight ring	8	Electromagnet	14	Spring washer
3	Spring	9	Man dril	15	Screw
4	Fixed ring	10	Coil assembly	16	Spring
5	Fixed plate	11	Position ring	17	Airtight bush
6	O-ring	12	E Clip		

Specification

Type\Item		Port size①	Orifice size (Φmm)	Cv	Valid area or section(mm^2)	Weight ②(g)	Max.operating pressure differentia		Proof pressure	
							MPa	psi	MPa	psi
2KLH030	-06	1/8"	2.0	0.18	3.0	305	1.5	220	3.0	450
	-08	1/4"				295				
2KL030	-06	1/8"	3.0	0.33	6.0	305	0.7	100		
	-08	1/4"				295				
2KLH050	-10	3/8"	4.0	0.55	10.0	610	1.5	220		
	-15	1/2"				600				
2KL050	-10	3/8"	5.0	0.83	15.0	610	0.7	100		
	-15	1/2"				600				

① G thread and NPT thread are available.
② The weight in the table is the terminal valve's weight, 2KL030 series grommet valve's weight is 10g less than terminal's. 2KL050series grommet valve's weight is 20g less than terminal's.

Specification of coil

Valve type	Coil type	Power type	Frequency (Hz)	Voltage range	Electrical entry	Power Consumption (VA/W)	Insulation	Temp. rise(℃)
2KL□030	CDA116 CLA116	AC	50	±15%	Terminal (CDA) Grommet (CLA)	15.0VA	Class H	50
			60			11.0VA		40
		DC	–	±10%		6.5W		30
2KL□050	CDA170 CLA170	AC	50	±15%		35.0VA		65
			60			30.0VA		60
		DC	–	±10%		10.5W		40

Ordering code

2KL H 030 08 A □ G

Model
2KL: 2/2 way direct-acting and normally opened

Thread type
G: G
T: NPT

Pressure condition
H: High pressure
Blank: Standard

Electrical entry
Blank: Terminal
I: Grommet

Size series
030: 030 Series
050: 050 Series

Voltage
A: AC220V
B: DC24V
C: AC110V
E: AC24V
F: DC12V

Port size

Size series	Port size
030 Series	06: 1/8"
	08: 1/4"
050 Series	10: 3/8"
	15: 1/2"

Ordering code of accessories

Ordering code of accessories is the same as 2S series valve's. Please refer to P98 for details of ordering code.

Flow chart

Fluid: Vacuum

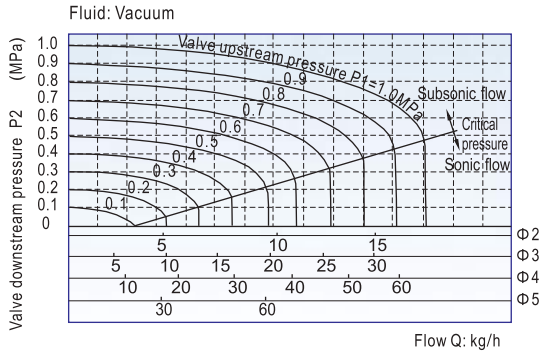

Fluid: Water

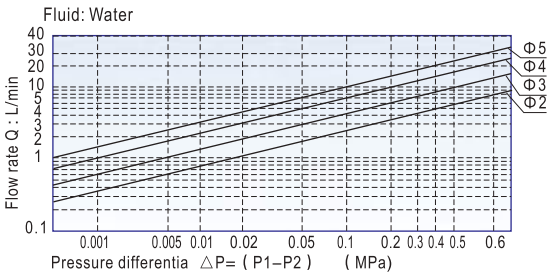

Dimensions

2KL□030(Terminal)

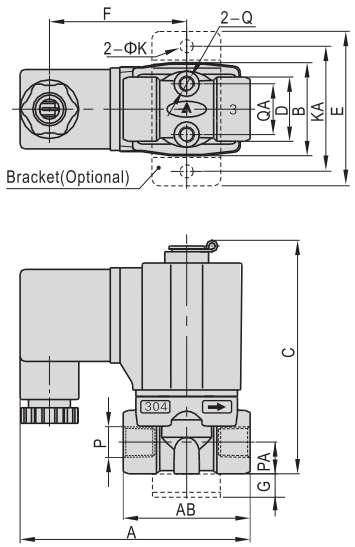

2KL□050(Terminal)

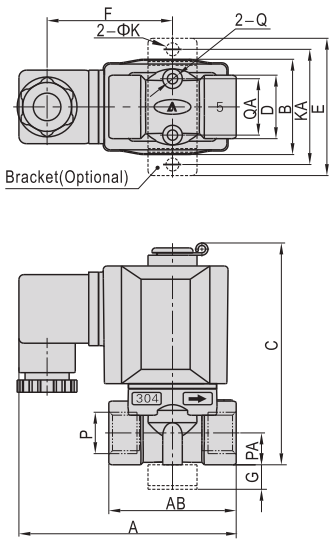

Type\Item	A	AB	B	C	D	E	F	G	K	KA	P	PA	Q	QA
2KL□030−06	72.5	40	29.3	76	20	49	43.5	10	5.3	40	1/8"	10	M5	16
2KL□030−08	72.5	40	29.3	76	20	49	43.5	10	5.3	40	1/4"	10	M5	16
2KL□050−10	89.5	52	39	92	26	56	51	10	5.3	48	3/8"	13	M5	23
2KL□050−15	89.5	52	39	92	26	56	51	10	5.3	48	1/2"	13	M5	23

2KL□030(Grommet)

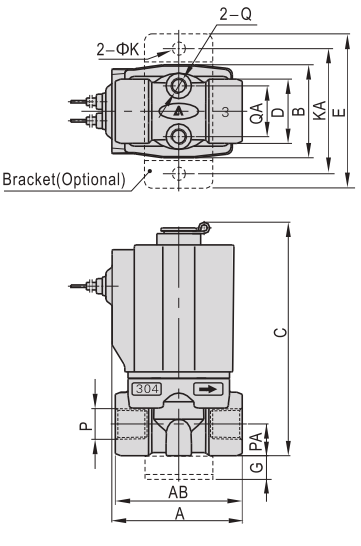

2KL□050(Grommet)

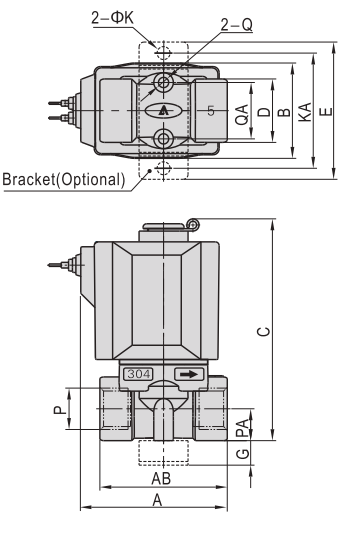

Type\Item	A	AB	B	C	D	E	G	K	KA	PA	P	Q	QA
2KL□030−06	41	40	29.5	76	20	49	10	5.3	40	10	1/8"	M5	16
2KL□030−08	41	40	29.5	76	20	49	10	5.3	40	10	1/4"	M5	16
2KL□050−10	60	52	39	92	26	56	10	5.3	48	13	3/8"	M5	23
2KL□050−15	60	52	39	92	26	56	10	5.3	48	13	1/2"	M5	23

2KL

Symbol

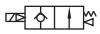

Product feature

1. Indirect acting(Internal pilot) and normally opened type 2/2 way solenoid valve. Its high sensibility allows it to change direction quickly.
2. It is compact, small size and light weight. It is easy to install and dismantle.
3. The valve body is made of SUS304 . Its coil has a Heat resistance classification of Class H. The standard seal material is PTFE(Teflon) which is suitable for a variety of working medium such as water with high temperature and vapour.
4. The protection class of the coil is IP65 and there is a choice for grommet or terminal electrical entry .

Valve's specification

Acting	Internally piloted				
Initial stats	Normally opened				
Adaptable fluid ①	Steam, High temperature Water, Oil				
Viscosity limit	Under 20CST				
Ambient and fluid temperature(℃)		Oil	Water	Steam	Ambient
	Max.	150	150	183	100
	Min.	-10②	1	-	−20

① Note: Please refer to P123 for detail of other's fluid.
② Note: 50CST or less.

Inner structure

2KL150(Grommet)

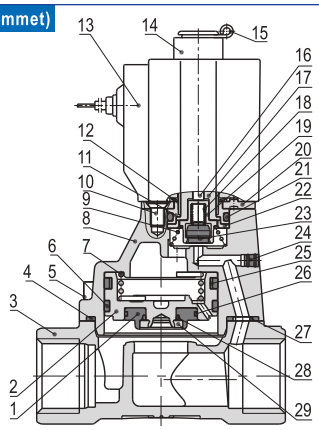

No.	Item	No.	Item	No.	Item
1	Gasket	11	Fixed cap	21	O-ring
2	Piston	12	Bead flange	22	Fixed ring
3	Body	13	Coil assembly	23	Airtight ring
4	Gasket	14	Position ring	24	Plug
5	Screw	15	E Clip	25	Spring
6	Wear ring	16	Man drill	26	O-ring
7	Spring	17	Electromagnet	27	Bush
8	Cover	18	Spring	28	O-ring
9	Spring	19	Airtight bush	29	Fixed ring
10	Screw	20	Fixed plate		

Specification

Type\Item	Port size①	Orifice size (Φmm)	Cv	Valid area or section(mm^2)	Weight ②(g)	Max.operating pressure differentia		Proof pressure	
						Mpa	psi	MPa	psi
2KL150−15	½"	15.0	5.50	100.0	675	Max:0.7 Min:0.05	Max:100 Min:10	1.5	220
2KL200−20	3/4"	20.0	9.50	170.0	880				
2KL250−25	1"	25.0	12.50	220.0	1125				
2KL320−32	1 1/4"	35.0	23.00	420.0	2710				
2KL400−40	1 ½"	40.0	31.00	560.0	3260				
2KL500−50	2"	50.0	49.00	880.0	4310				

① G thread and NPT thread are available.
② The weight in the table is the terminal valve's weight, 2KL150~250 series grommet valve's weight is 10g less than terminal's. 2KL320~500series grommet valve's weight is 20g less than terminal's.

Specification of coil

Valve type	Coil type	Power type	Frequency (Hz)	Voltage range	Electrical entry	Power Consumption (VA/W)	Insulation	Temp. rise(℃)
2KL150 2KL200 2KL250	CDA116 CLA116	AC	50	±15%	Terminal (CDA) Grommet (CLA)	15.0VA	Class H	50
			60			11.0VA		40
		DC	–	±10%		6.5W		30
2KL320 2KL400 2KL500	CDA170 CLA170	AC	50	±15%		35.0VA		65
			60			30.0VA		60
		DC	–	±10%		10.5W		40

Ordering code

2KL 150 15 A □ G

Model
2KL: 2/2 way internally piloted and normally opened

Orifice size
150: Φ15mm
200: Φ20mm
250: Φ25mm
320: Φ35mm
400: Φ40mm
500: Φ50mm

Port size

Orifice size	Port size
Φ15mm	15: 1/2"
Φ20mm	20: 3/4"
Φ25mm	25: 1"
Φ35mm	32: 1 1/4"
Φ40mm	40: 1 1/2"
Φ50mm	50: 2"

Voltage
A: AC220V
B: DC24V
C: AC110V
E: AC24V
F: DC12V

Electrical entry
Blank: Terminal
I: Grommet

Thread type
G: G
T: NPT

Ordering code of accessories

Ordering code of accessories is the same as 2S series valve's, Please refer to P100 for details of ordering code.

Note: 320\400\500 series valves do not have mounting accessories.

2KL Series (Internally piloted and normally opened)

Flow chart

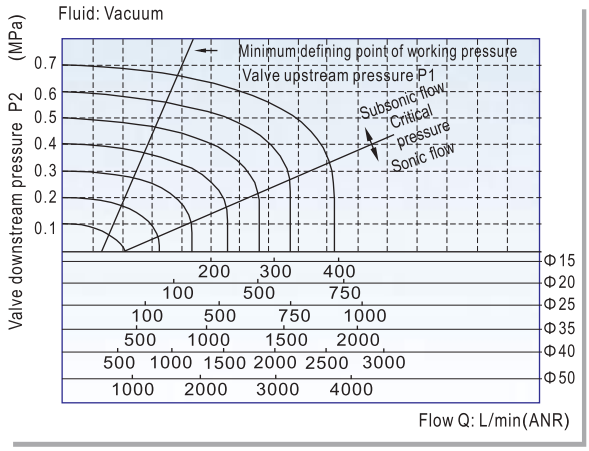

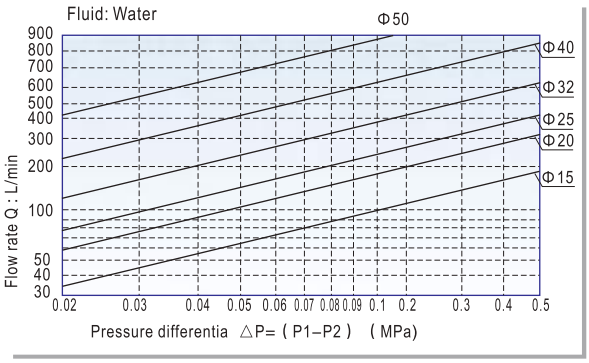

Dimensions

2KL150~250(Terminal)

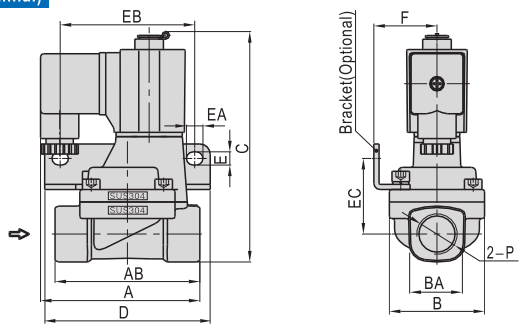

2KL320~500(Terminal)

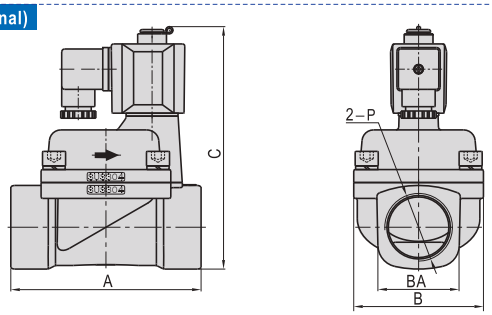

Type\Item	A	AB	B	BA	C	D	E	EA	EB	EC	F	P
2KL150−15	77	70	46	27.5	112.5	80	6.4	8	65	36.5	30.5	1/2"
2KL200−20	78.5	82	53	33.5	121	90	6.4	8	75	40	34	3/4"
2KL250−25	81	92	59	40.5	129.5	95	6.4	8	80	44.5	36	1"
2KL320−32	125	–	80	52	160	–	–	–	–	–	–	1 1/4"
2KL400−40	132	–	90	58	167	–	–	–	–	–	–	1 1/2"
2KL500−50	150	–	100	70	182	–	–	–	–	–	–	2"

2KL150~250(Grommet)

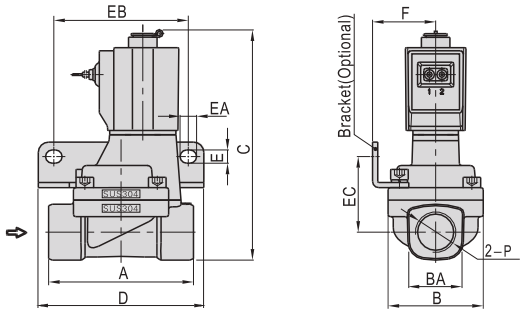

2KL320~500(Grommet)

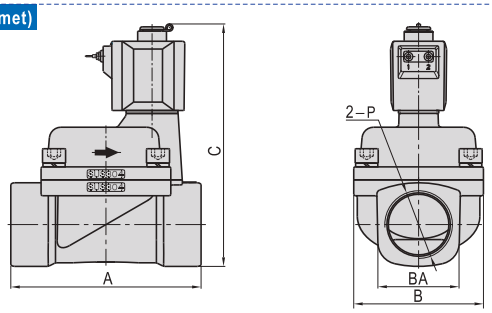

Type\Item	A	B	BA	C	D	E	EA	EB	EC	F	P
2KL150−15	70	46	27.5	112.5	80	6.4	8	65	36.5	30.5	1/2"
2KL200−20	82	53	33.5	121	90	6.4	8	75	40	34	3/4"
2KL250−25	92	59	40.5	129.5	95	6.4	8	80	44.5	36	1"
2KL320−32	125	80	52	160	–	–	–	–	–	–	1 1/4"
2KL400−40	132	90	58	167	–	–	–	–	–	–	1 1/2"
2KL500−50	150	100	70	182	–	–	–	–	–	–	2"

Specification

Item \ Type	Power	Voltage (V)	Frequency (Hz)	Voltage range	Electrical entry	Power Consumption(VA/W) For NC	Power Consumption(VA/W) For NO	Insulation	Temp rise(℃) NC	Temp rise(℃) NO
116 Series	AC	220	50	±15%	DIN Terminal Grommet	10.0VA	15.0VA	Class B Class H	35	50
			60			8.0VA	11.0VA		30	40
		110	50			10.0VA	15.0VA		35	50
			60			8.0VA	11.0VA		30	40
		24	50			10.0VA	15.0VA		35	50
			60			8.0VA	11.0VA		30	40
	DC	24	–	±10%		6.5W			30	30
		12								
170 Series	AC	220	50	±15%	DIN Terminal Grommet	25.0VA	35.0VA		60	65
			60			22.0VA	30.0VA		55	60
		110	50			25.0VA	35.0VA		60	65
			60			22.0VA	30.0VA		55	60
		24	50			25.0VA	35.0VA		60	65
			60			22.0VA	30.0VA		55	60
	DC	24	–	±10%		10.5W			40	40
		12								

Hookup

Coil's type			Hookup	Connector's type
116 Series	CDA116 (Terminal)	AC	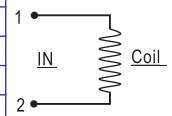	PL2925M-P1
		DC		
	CLA116 (Grommet)	AC		-
		DC		
170 Series	CDA170 (Terminal)	AC		PL3030M-P1
		DC		
	CLA170 (Grommet)	AC		-
		DC		

How to use connector

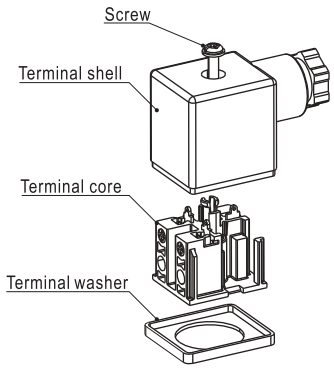

How to select coil

Valve type\ Coil type		116 Series Class B	116 Series Class H	170 Series Class B	170 Series Class H
2W□030 2KW□030	2S□030 2KS□030	●	×	×	×
2L□030	2KL□030	×	●	×	×
2W□050 2KW□050	2S□050 2KS□050	×	×	●	×
2L□050	2KL□050	×	×	×	●
2W150~250 2KW150~250	2S150~250 2KS150~250	●	×	×	×
2L150~250	2KL150~250	×	●	×	×
2S320~500	2KS320~500	×	×	●	×
2L320~500	2KL320~500	×	×	×	●

How to select accessories

Valve type\ Coil type			F-2S030LB	F-2S050LB	F-2S150LB	F-2S200LB	F-2S250LB
2W□030 2KW□030	2S□030 2KS□030	2L□030 2KL□030	●	×	×	×	×
2W□050 2KW□050	2S□050 2KS□050	2L□050 2KL□050	×	●	×	×	×
2W150 2KW150	2S150 2KS150	2L150 2KL150	×	×	●	×	×
2W200 2KW200	2S200 2KS200	2L200 2KL200	×	×	×	●	×
2W250 2KW250	2S250 2KS250	2L250 2KL250	×	×	×	×	●
2S320~500 2KS320~500	2L320~500 2KL320~500		×	×	×	×	×

Ordering code of coil

CD A116 A □

Coil type
- CD: Terminal
- CL: Grommet

Temperature resistance class of coil
- Blank: B Class
- H: H Class

Coil's bore
- A116: Coil Specification(Bore size Φ11.6mm)
- A170: Coil Specification(Bore size Φ17.0mm)

Voltage
- A: AC220V
- B: DC24V
- C: AC110V
- E: AC24V
- F: DC12V

Usable medium for reference

Usable medium

Series		2W. 2KW series	2S. 2KS series	2L. 2KL series
Valve body material		Brass	SUS304	SUS304
Seal material		FPM–F	FPM–F	PTFE
Medium	Dry air	◎	◎	○
	Carbon dioxide CO_2	◎	◎	△
	Nitrogen	◎	◎	△
	Argon	◎	◎	△
	Water	◎	◎	◎
	Pure water	△	◎	◎
	Saturated vapor	△	△	◎
	High temp water(≤150℃)	△	△	◎
	ISO VG32 oil	◎	◎	◎
	JIS#1 oil	◎	◎	◎
	JIS#2 oil	◎	◎	◎
	Methanol*	△	△	◎
	Eethanol*	○	○	◎
	Glycol *	◎	◎	◎
	Acetone*	△	△	◎
	Propylene butyronitrile*	△	△	△
	Acetylene*	△	△	△
	Acetaldehyde*	△	△	◎
	Ammonia	△	△	△
	Ammonia water	△	△	△
	Isopropanol	◎	◎	◎
	Alcohol(High purity)*	◎	◎	◎
	Alcohol(Industrial)*	△	△	△
	Aether*	△	△	◎
	Ammonia chioride solution	△	△	△
	Ozone(low concentration)	△	△	◎
	Phosphoric acid	△	△	△

Series		2W. 2KW series	2S. 2KS series	2L. 2KL series
Valve body material		Brass	SUS304	SUS304
Seal material		FPM–F	FPM–F	PTFE
Medium	Hydrogen peroxide	△	△	△
	Caustic soda	△	△	△
	Gasoline*	○	○	◎
	Glycerin*	△	△	△
	Light oil	◎	◎	◎
	Oxygen	◎	◎	△
	Heavy oil A	◎	◎	◎
	Heavy oil B	◎	◎	◎
	Heavy oil C	◎	◎	◎
	Nitric acid 30%	△	△	△
	Vacuum (medium vacuum)	○	○	△
	Vacuum(high vacuum)	△	△	△
	Sodium hydroxide under 30%	△	△	△
	Sodium hydoxide above 30%	△	△	△
	Hydrogen	◎	◎	△
	Soap	△	△	◎
	Azote	◎	◎	△
	Natural gas*	◎	◎	△
	Pipeline gas*	◎	◎	△
	Toluene*	△	△	◎
	Ligroine*	△	△	◎
	Boracic acid	△	△	△
	Formalin	△	△	△
	Methane*	◎	◎	△
	Lacquer *	△	△	◎
	Ammonium sulfate solution	△	△	△
	Copper sulfate solution	△	△	△

1 Note: ◎= Excellent(nearly without affect); ○= Good(workable though some affect); △= Poor(large affect).

2 Note: "*" means inflammable and explosive dangerous fluid. Please use the relative explosion proof coil.

3 Note: Under the corresponding gaseous state medium, PTFE seal is with a little leakage(≤300mL/min).

4 Note: Please consult the technical department before using fluid that has not been shown in the above table.

Symbol

Product feature

2V025 series

1. Direct acting and normally closed type 2/2 way solenoid valve. Its high sensitivity allows it to change direction quickly.
2. The structure is small and compact.
3. The valve body is made of brass which is heat resistance and the coil conforms to Class B classification. The seals are made of fluorine rubber (VITON) which is suitable for several types of working medium.

2V130 and 250 series

1. This 2/2 way diaphragm piloted solenoid valve has low energy consumption and large air flow .
2. The starting pressure is low and the operational differential pressure is < 0.05MPa.
3. The valve body is made of brass which is heat resistance and the coil conforms to Class B classification . The seals are made of NBR.

Inner structure

2V025 Terminal

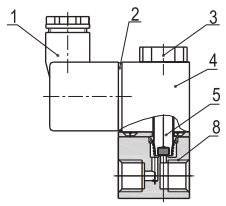

2V250 Terminal

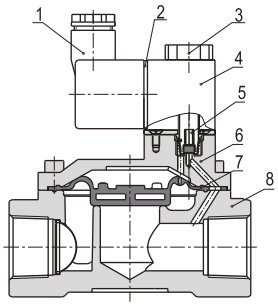

No.	Item	No.	Item	No.	Item	No.	Item
1	Connector	3	Nut	5	Armature assembly	7	Diaphragm
2	Connector gasket	4	Coil	6	Body cover	8	Body

Specification

Model	2V025–06	2V025–08	2V130–10	2V130–15	2V250–20	2V250–25
Fluid	Air. Water. Oil					
Acting	Direct acting		Internally piloted acting			
Type	Normally closed					
Orifice size(Φmm)	2.5	2.5	13.0	13.0	25.0	25.0
Cv valve	0.23	0.25	6.20	6.20	13.00	13.00
Port size ①	1/8"	1/4"	3/8"	1/2"	3/4"	1"
Viscosity limit	Under 20CST					
Pressure range	0~1.0MPa(0~145psi)		0.05~1.0MPa(7~145psi)			
Proof pressure	1.5MPa(215psi)					
Material body	Brass with zinc plated		Brass			
Seal material	VITON		NBR			
Min. activating time sec	0.05 sec and below					

① G thread and NPT thread are available.

Specification of coil

Valve type	Power type	Frequency (Hz)	Voltage range	Electrical entry	Power Consumption (VA/W)	Insulation	Temp. rise(℃)
2V025 2V130 2V250	AC	50	±15%	Terminal Grommet	7.0VA	Class B	35
		60					
	DC	–	±10%		7.0W		45

Ordering code

2V 025 08 A □ G

Model
2V: 2 port 2 position solenoid valve

Orifice size
025: Φ2.5mm
130: Φ13mm
250: Φ25mm

Port size

Orifice size	Port size
Φ2.5mm	06: 1/8"
	08: 1/4:
Φ13mm	10: 3/8"
	15: 1/2"
Φ25mm	20: 3/4"
	25: 1"

Thread type
G: G
T: NPT

Electrical entry
Blank: Terminal
I: Grommet

Voltage
A: AC220V
B: DC24V
C: AC110V
E: AC24V
F: DC12V

Usable fluid

Seal material\Fluid	Water	Dry air	Acetone*	ISOVG32 oil	Glycol*	Nitrogen	Heavy oil
NBR	○	◎	△	◎	○	◎	○

Seal material\Fluid	JIS# 1 Oil	JIS#3 Oil	Vegetable Oil	Inorganic Oil	Start Oil	Silicagel Oil	CO_2	Argon
NBR	◎	○	◎	◎	○	◎	◎	◎

1 Note: ◎= Excellent(nearly without affect). ○= Good(workable though some affect). △= Poor(large affect).
2 Note: "*" means inflammable and explosive dangerous fluid. Please use the relative explosion proof coil.
3 Note: Please consult the technical department before using fluid that has not been shown in the above table.

Flow chart

Model:2V025-06 2V025-08 Fluid:air

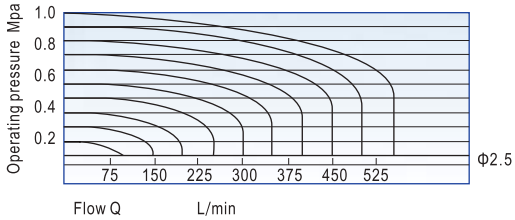

Model:2V130-10 2V250-20
2V130-15 2V250-25 Fluid:air

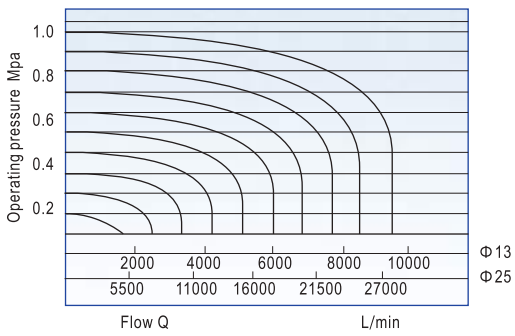

Model:2V025-06 2V025-08 Fluid:water

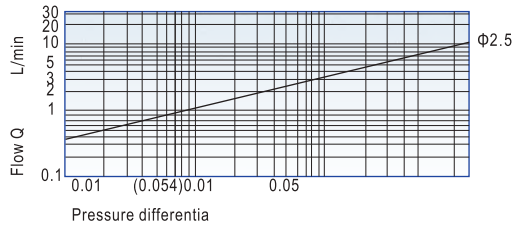

Model:2V130-10 2V250-20
2V130-15 2V250-25 Fluid:water

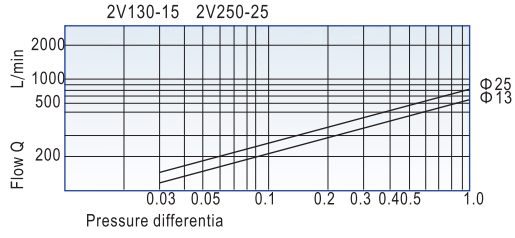

Dimensions

2V025 Terminal

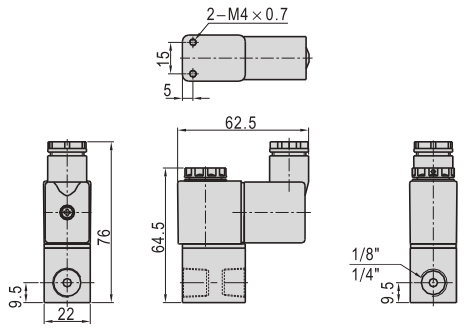

2V025 Grommet

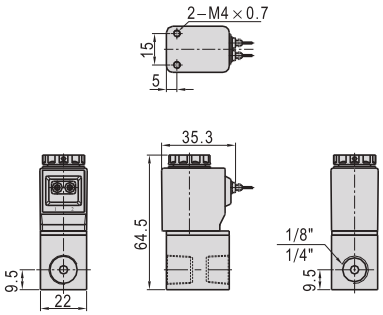

2V130, 250 Terminal

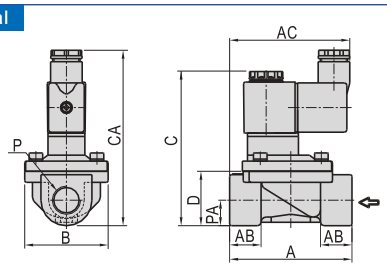

2V130, 250 Grommet

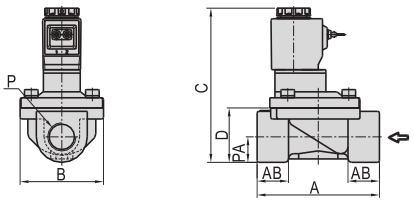

Model\Item	A	AB	AC	B	C	CA	D	P	PA
2V130-10	72	18.5	71	49	91	103	32	3/8"	15
2V130-15	72	18.5	71	49	91	103	32	1/2"	15
2V250-20	102	23	74	77.5	107.5	120	45	3/4"	21
2V250-25	102	23	74	77.5	107.5	120	45	1"	21

Symbol

Product feature

1. Direct acting and normally closed type 2/2 way solenoid valve. Its high sensitivity allows it to change direction quickly.
2. Its compact size is small and light weight. It is easy to install and dismantle.
3. The valve body is made of Nylon 66. Its coil has a Heat resistance classification of Class B . The seals are made of Viton which is suitable for different types of fluid.
4. The protection class of the coil is IP65, and the electrical entry is grommet.

Inner structure

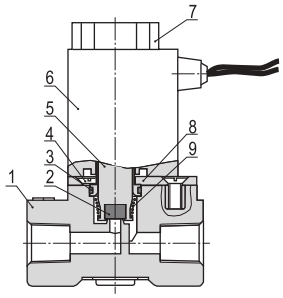

No.	Item	No.	Item	No.	Item
1	Body	4	Pilot screw	7	Coil nut
2	Botton cover gasket	5	Armature	8	Fixed plate
3	O-ring	6	Coil	9	Spring

Flow chart

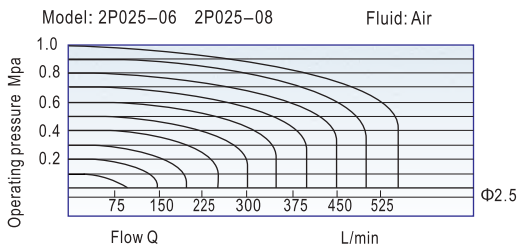

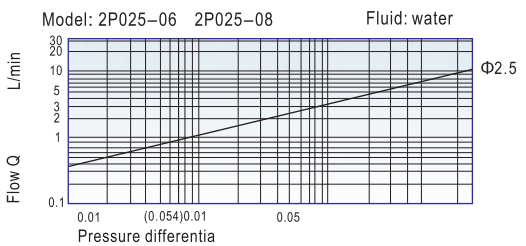

Specification

Model	2P025-06	2P025-08
Fluid	Air, Water, Oil	
Acting	Direct acting	
Type	Normally closed	
Orifice size(Φmm)	2.5	
Cv valve	0.23	
Port siz	G1/8	G1/4
Viscosity limit	Under 20CST	
Pressure range	0~0.7MPa(0~100psi)	
Proof pressure	1.05MPa(150psi)	
Material body	Nylon 66	
Seal material	VITON	
Min. activating time sec	0.05 sec and below	

Specification of coil

Valve type	Power type	Frequency (Hz)	Voltage range	Electrical entry	Power Consumption (VA/W)	Insulation	Temp. rise(℃)
2P025	AC	50	±15%	Terminal Grommet	7.0VA	Class B	35
		60					
	DC	–	±10%		7.0W		45

Ordering code

2P 025 08 A I G

- **Model**: 2P:2 port 2 position solenoid valve(plastic steel type)
- **Orifice size**: 025: Φ2.5mm
- **Port size**: 06:G1/8; 08:G1/4
- **Voltage**: A:AC220V; B:DC24V; C:AC110V; E:AC24V; F:DC12V
- **Electrical entry**: I: Grommet
- **Thread type**: G:G

Dimensions

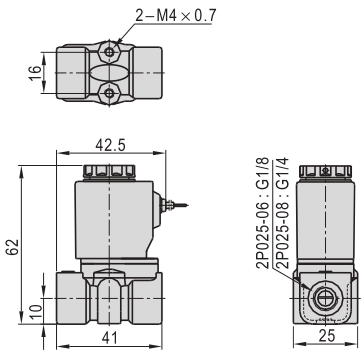

Angle seat valve(2/2 way)

2J Series

Symbol

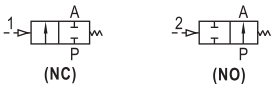

Product feature

1. Air piloted and can be used non electric, inflammable and explosive environment. The start-up pressure is low; and the high pressure could be controlled by the low pressure.
2. The accessories such as the noumenon and slide bar are made of stainless steel, which are of excellent rustproof quality. The seals are made of Teflon and can be applied extensively in areas with high temperature and strong corrosive liquids.
3. The structure of valve is angles at 45° degrees with streamline inner chamber design . The reduced tunnel resistance allows liquid to run more smoothly thus achieving high flow. Filtration core are added at inlet port to prevent the entrance of impurities and extend life span of the seals.
4. Actuator is fitted with visual position indicator. This allows for visual checking and adjustment of flowrate.
5. Control point is made of metal insert. Mounting plate can be used to for NAMUR value.
6. The actuator part can be rotated at 360° degrees and is easily installed.

Ordering code

2J S K 150 15 Q50 G

Model
- 2J: Angle seat valve(2/2 way)

Valve body meterial
- S: SUS316L
- W: SUS304

Acting type

Blank: No water-hammer(NC)

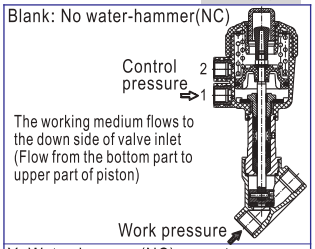

Y: Water-hammer(NC)

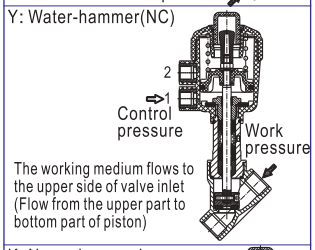

K: Normal opened

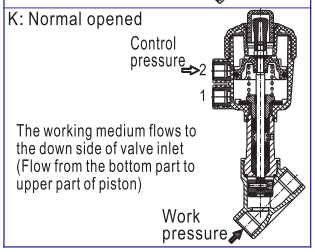

Orifice size
- 150: Φ15mm
- 200: Φ20mm
- 250: Φ25mm
- 320: Φ32mm

Port size

Orifice size	Port size
150	10: 3/8"
	15: 1/2"
200	20: 3/4"
250	25: 1"
320	32: 1

Size of actuator
- Q40: Φ40mm
- Q50: Φ50mm
- Q63: Φ63mm
- Q80: Φ50mm

Thread type
- G: G
- T: NPT

Specification

Model\Item		Port	Actuator size(mm)	Orifice size(mm)	Kv	Min.pilot pressure(bar)	Max. differentia pressure(bar)	Weight (kg)
2JS150 2JW150	-10	3/8"	40	15	4.4	4.8	13	0.8
	-15	1/2"						0.7
	-10	3/8"	50		4.8	4.3	16	0.8
	-15	1/2"						0.7
2JS200 2JW200	-20	3/4"	40	20	7.9	4.8	6.5	0.9
			50		8	4.3	11	0.95
			63		10	4.2	16	1.6
2JS250 2JW250	-25	1"	63	25	19	4.2	11	1.9
			80		20	5.0	16	2.5
2JS320 2JW320	-32	1¼"	63	32	27	4.2	6	2.5
			80		28	5.0	15	3.0
2JSK150 2JWK150	-10	3/8"	40	15	4.4	For details, please refer to normally-opened-type fluid pressure – control pressure curve	16	0.8
	-15	1/2"						0.7
	-10	3/8"	50		4.8		16	0.8
	-15	1/2"						0.7
2JSK200 2JWK200	-20	3/4"	40	20	7.9		16	0.9
			50		8		16	0.9
2JSK250 2JWK250	-25	1"	50	25	14.5		16	1.2
			63		19		16	1.6
2JSK320 2JWK320	-32	1¼"	63	32	27		16	2.2
			80		28		16	2.4
2JSY150 2JWY150	-10	3/8"	40	15	4.4	For details, please refer to normally-closed-water-hammer-type fluid pressure – control pressure curve	16	0.8
	-15	1/2"						0.7
	-10	3/8"	50		4.8		16	0.8
	-15	1/2"						0.7
2JSY200 2JWY200	-20	3/4"	40	20	7.9		16	0.9
			50		8		16	0.9
2JSY250 2JWY250	-25	1"	50	25	14.5		16	1.3
			63		19		16	1.7
2JSY320 2JWY320	-32	1¼"	63	32	27		16	2.3

Operation and maintenance

1. Before using, please verify that if the working status of product is identical with data in catalogue, and it should not exceed the limits.
2. Before the pressure releasing and cooling of system, no maintenance, examination and installation of product should be conducted.
3. For the normally-closed-type , when its valve is disassembled, due to the pre-pressure of the relatively large spring power in controller, the "1" hole should be opened for ventilation in advance so to make sure the piston could be completely moved to the position, then rotate the screw thread between the valve and the connection bar, direct rotation is forbidden, otherwise the disassembling would not be conducted in result of the scuffing of screw thread.
4. If maintenance of actuator part is needed, special tools should be used for disassembling and installation, while disassembling, the loading spring could cause damage. If the customer can not conduct the maintenance, please return the valve to manufacturer for maintenance.

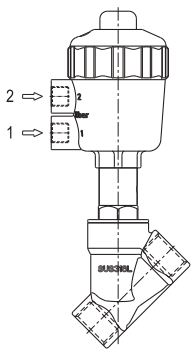

Fluid pressure — control pressure curve

Normal opened

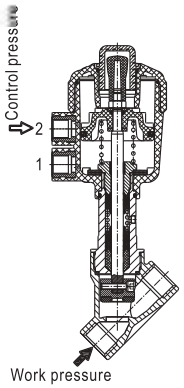

The working medium flows to the down side of valve inlet

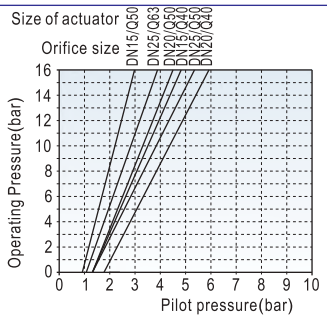

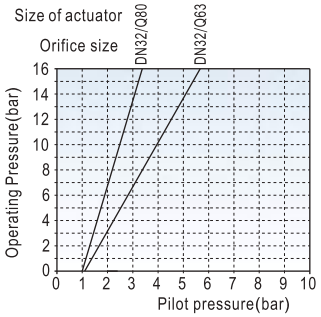

Water-hammer(NC)

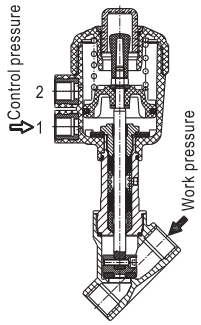

The working medium flows to the upper side of valve inlet

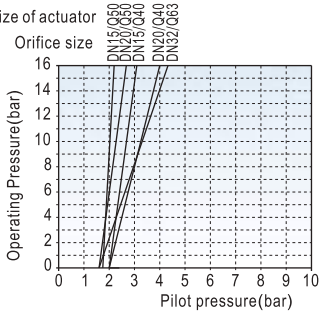

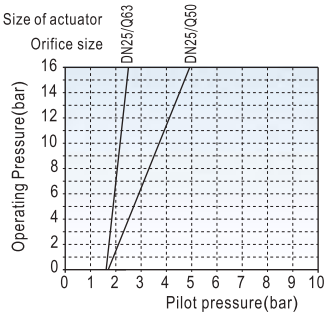

Ambient and medium temperature

Control medium	Air. neutral air(to be filtered by 40 μ m filter element)
Max. control pressure	Size of actuator Φ40, 50, 63: 10bar
	Size of actuator Φ80: 7bar
Medium①	air, liquid, vacuum, steam
Viscosity limit	600mm²/s below
Temperatur②	-20~+180℃
Ambient temp③	-10~+60℃

Note: ① The water-hammer-type can be used for air, or steam only, and can not be used for liquid.
② Dew point: −20℃ or less.
③ Relationship of working medium temperature and ambient temperature is shown in following figure.

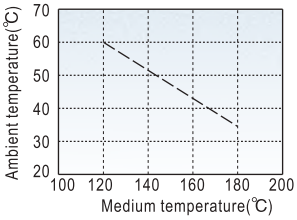

Inner structure

2JS150-Q50

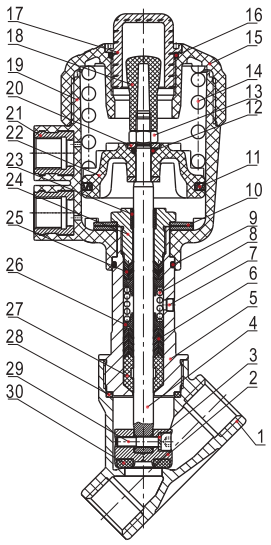

No.	Item	Material
1	Body	Stainless steel
2	Piston	Stainless steel
3	Spring washer	Spring steel
4	Piston rod	Stainless steel
5	Pitman	Stainless steel
6	V-seals	PTFE
7	Filter core	Bronze
8	Spring	Spring steel
9	O-ring	NBR
10	Bellville spring	Spring steel
11	O-ring	NBR
12	O-ring	NBR
13	Hexagon nut	steel
14	Spring	Spring steel
15	Top cover	PA6
16	O-ring	NBR
17	Transparent cap	Plastic
18	Indicative	Plastic
19	Cylinder body	PA6
20	Washer	SPCC
21	Built-in nut	Brass nickel-plate
22	Piston	PA6
23	DU dry bearing	Wear resistant material
24	Connect nut	Brass
25	O-ring	Viton
26	Spring holder	PTFE
27	Guide sleeve	PTFE
28	Seal washer	PTFE
29	Screw	Stainless steel
30	Seal washer	PTFE

Dimensions

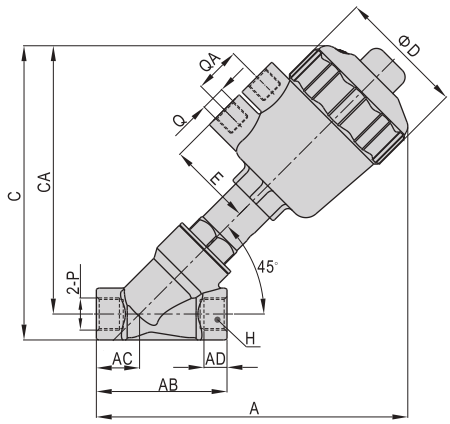

Orifice size(DN)	Size of actuator	A	AB	AC	AD	C	CA	ΦD	E	H	Port size(P)	Q	QA
15	Φ40	153	68	22.5	12	144	130	56	33	27	3/8"	1/8"	24
	Φ50	162				153	140	66	44		1/2"	1/4"	
20	Φ40	161	78	27	14	150	134	56	33	33	3/4"	1/8"	
	Φ50	170				160	143	66	44			1/4"	
	Φ63	200				189	172	82	51			1/4"	
25	Φ50	176	90	28		168	147	66	44	40	1"	1/4"	
	Φ63	205				197	176	82	51			1/4"	
	Φ80	221				213	193	102	60			1/4"	
32	Φ63	220	110	35	18	210	185	82	51	50	1 1/4"	1/4"	
	Φ80	237				227	202	102	60			1/4"	

Summary of preparation unit

To achieve the optimization of system performance, the first thing is to get the gas source which accords with the specifications. Preparation unit with good performance are the precondition to make sure the gas source.
AirTAC has many kinds of preparation unit for your choice:
1. G series;
2. Other accessory series.

G Series

GC200~600 Series F.R.L combination..... 134
GFC200~600 Series FR.L combination..... 136
GFR200~600 Series Filter & regulator..... 138
GF200~600 Series Filter..... 140
GR200~600 Series Regulator..... 142
GL200~600 Series Lubricator..... 144
G Series(Metallic bowl type)..... 147
GV200~400 Series Soft start-up valves..... 148
GZ200~400 Series Safe on-off valve..... 149
GA200~600 Series Air distribution block..... 150

Others

SR200 Series Regulator..... 152
SDR Series Regulator..... 153
ADW Series Drip leg drain..... 155
GS, GF, GU Series Pressure gauge..... 156
DPS Series Digital Display Pressure Switch..... 157
DPC Series Minitype No Display Pressure Switch..... 160

F.R.L

How to Correctly Install and Use

The installation and application of the filter

Attention

1. Before installation, the sundry granule such as dust, oil pollution and chipping in pipeline shall be cleaned up to prevent the mixture of fragments of seal materials.
2. Never install reversingly the direction of intake and outlet. It shall be installed vertically and the bowl is downward. For the convenient of maintenance, proper space around the device shall be left. The installation height of filter shall accord with the elevation that the filter bowl can be dismantled.

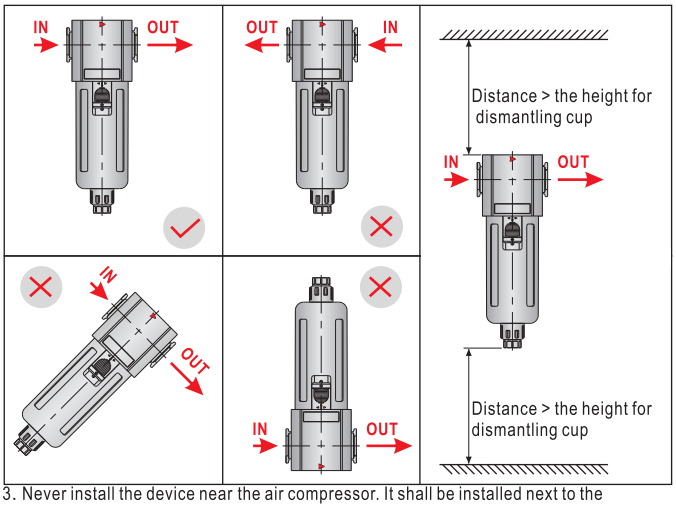

3. Never install the device near the air compressor. It shall be installed next to the pneumatic components at the end of pipeline, since the water and oil in the compressed air with high temperature from air compressor take on gaseous state which will not only influence the filter effect, but are easy to damage the seals. Please install condenser and dryer in front of the filter.

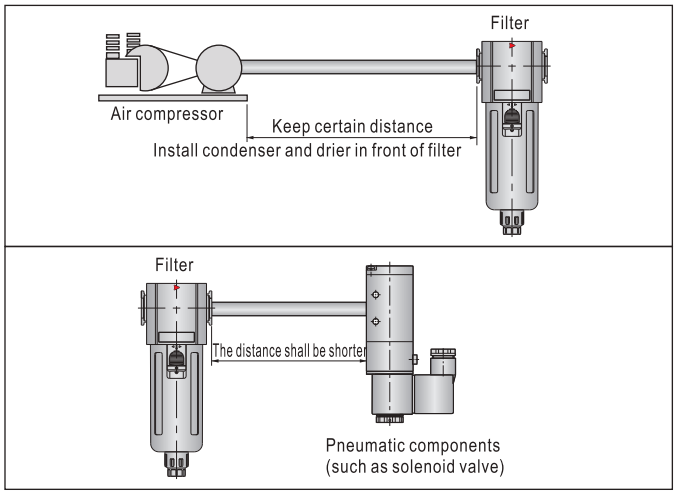

Warning

1. To prevent the external force to damage the filter bowl, never install it in the side of access of delivery vehicles or a protection barrier may be built.
2. The drain bowl is made of polycarbonate which can not be used in the environment with synthetic oil, organic solvent, chemicals, cooling fluid, alkali and acidic matter, gluewater; and the site additive with the above matters. Meanwhile, the direct sunshine shall be avoided.
3. Regular draining of bowl shall be conducted. Once water level surpasses the breakwater, the sewage filtered will be carried to the output compressed air again, causing secondary pollution.
4. To guarantee the filter effect, the filter core shall be cleaned or changed regularly.
5. Please regularly examine whether the plastic drain bowl has crack, damage or other aging.

Installation and application of regulator

Attention

1. Before installation, the sundry granule such as dust, oil pollution and chipping in pipeline shall be cleaned up to prevent the mixture of fragments of seal materials.
2. When there is more condensate, and if the condensate stays in the valve, poor action of Regulator will be easily caused. Therefore, the handle shall be installed downward.

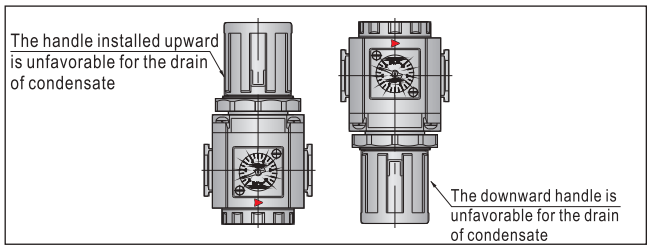

3. The direction of intake and outlet shall not be installed reversingly, otherwise the Regulator will leak for a long time and lose pressure- adjustment function.

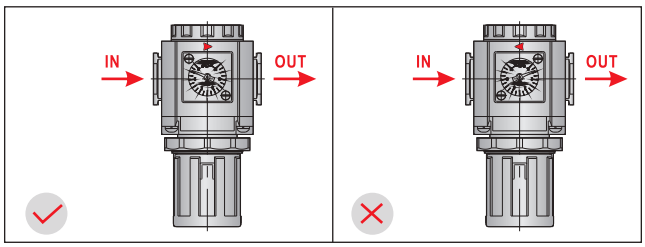

4. The set pressure at the outlet sides of Regulator shall be less than 85% of the pressure of intake side, which is to avoid overlarge pressure drop and failing in meeting the application requirement.
5. Two Regulator act as the loop for the intake by turns of high and low pressure. Please use free flow valve to prevent reflux.
6. If there are condensate, oil pollution and dust in pressure pipe at intake side, the jam in discharge orifice and restriction orifice and poor action of valve will be caused. Therefore, filter shall be installed additionally in front of Regulator.
7. It shall be applied in the stipulated temperature range and direct sunshine shall be avoided.
8. Proper space around the device shall be left for pressure-adjustment operation and maintenance.
9. After the pressure-adjustment operation is finished, the adjustment button of Regulator shall be locked.

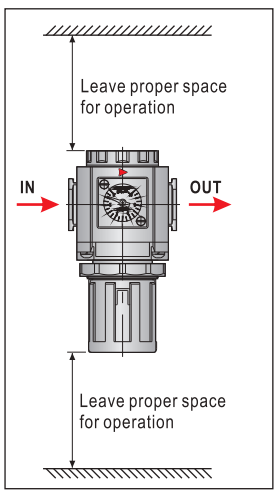

How to Correctly Install and Use

The installation and application of oil feeder

Attention

1. The direction of intake and outlet shall not be installed reversingly. Before installation, the sundry granule such as dust, oil pollution and chipping in pipeline shall be cleaned up to prevent the mixture of fragments of sealmaterial.

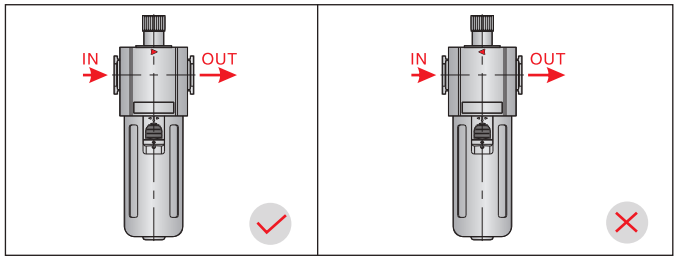

2. It will be difficult to supply oil and conduct maintenance if the Lubricator is set too high.
3. Lubricator shall be installed after the air filter and Regulator to prevent moisture entering the oil bowl and avoid oil emulsification. The throttle orifice in Regulator shall not be polluted by oil and the rubber parts shall not be influenced by oil mist. It is good for the atomization of oil that the velocity of low after Regulator is higher than that in front of the valve.

The correct installation sequence of Filter Regulator and Lubricator

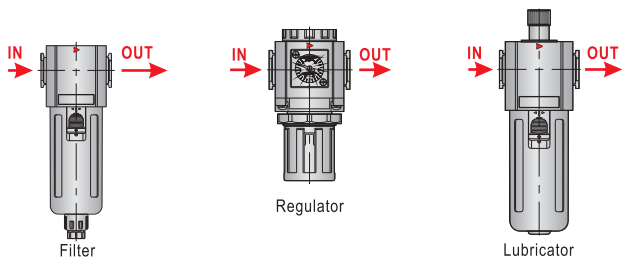

4. The number in dial in adjustment ring of Lubricator shows the position of oil quantity adjustment. The larger the number is, the more the oil dripping is. It is not for oil drops.
5. When Lubricator works, if there is a part in the pipeline loop that can not be supplied with oil, this part shall be set with one-way valve to prevent reflux.
6. The air flow that is used by Lubricator must meet the requirement of necessary quantity of oil dripping (minimal flow for mist). The insufficient air flow will cause the failure of oil dripping.

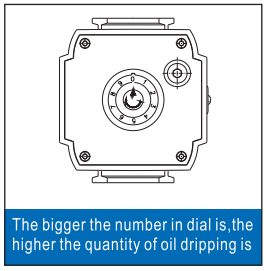

The bigger the number in dial is,the higher the quantity of oil dripping is

7. The Lubricator can be added oil under pressure. When oil is added, the oil-fill plug shall be slowly opened and dismantled after the pressure in oil bowl has been completely eliminated to prevent oil-fill plug flying off or oil spraying.
8. The oil level in oil bowl shall stay between the up limit and down limit, and please supplement oil on a timely basis.

◆Method for supplementing oil

When Lubricator is supplemented with oil, the oil-fill plug shall be turned off. Turbine oil poured into the oil bowl shall reach 80% of its volume.Oil shall be regularly examined and supplemented to allow the device to work under the situation that oil is sufficient. (As when the oil level is under the oil suction pipe, it can not supply oil for the system. Therefore, the oil shall be supplemented before the bottom of oil suction pipe is exposed).

◆Oil quantity and its adjustment

Generally speaking, the free air of each $10m^3$ uses $1cm^3$ as the benchmark oil supply quantity.

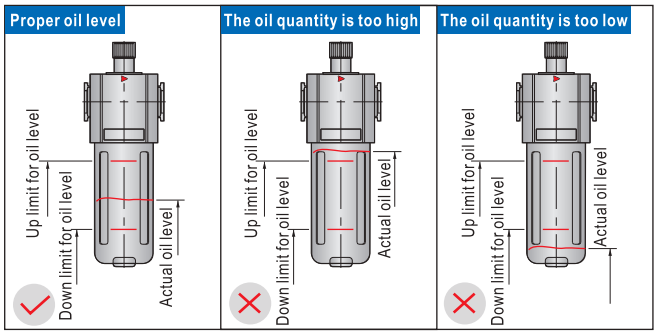

◆Lubricant

The lubricant that is recommended for pneumatic components is one kind (ISO VG32) of turbine oil. Especially when pneumatic components are lubricated, ts particularity shall be considered. Lubricant shall be anti-rust and avoid swelling, shrink and deterioration of seal materials (pneumatic components mostly adopt NBR as the seal's material).In addition, the performance of oil dripping of lubricant shall be considered. The viscosity that is too high or too low is not proper.

9. Please regularly examine whether the plastics bowl and inspection window of Lubricator have crack, damage or other aging situation.

Production's series

F.R.L Combination: GC Series 134

Filter: GF Series 140

G Series(Metallic bowl type) 147

FR.L Combination: GFC Series 136

Regulator: GR Series 142

Soft start-up valve: GV Series 148

Lubricator: GL Series 144

Safe on-off valve: GZ Series 149

Filter & Regulator: GFR Series 138

Reflux valve: GA315 Series 146

Air distribution block: GA Series 150

Installation and application

1. Check whether the components have been damaged during transportation before installing and using.
2. Pay attention to whether the flow direction of air (notice "→" direction) and thread type are correct.
3. Please notice whether installation condition accords with technical requirements (such as "working pressure" and "applied temperature range");
4. Avoid usage in an environment that exposes the filter and lubricator bowl through contact with Chlorine, solvent, aromatic essence, acid and alkali to avoid damage to the Filter and Lubricator bowl.
5. Regularly clean or change filter core. Lubricators and regulators shall be in descending order.
6. Keep the dust away. The dust cover shall be installed in intake and outlet when the device is dismantled and stored.

Specification

Model		GC200-06	GC200-08	GC300-08	GC300-10	GC300-15	GC400-10	GC400-15	GC600-20	GC600-25
Fluid		Air								
Port size		1/8"	1/4"	1/4"	3/8"	1/2"	3/8"	1/2"	3/4"	1"
Filtering grade		40 μ m or 5 μ m								
Pressure range		Semi-auto and automatic drain:0.15~0.9MPa(20~130psi);Manual drain:0.05~0.9MPa(7~130psi)								
Max. pressure		1.0MPa(145psi)								
Proof pressure		1.5MPa(215psi)								
Temperature range		–5~70℃								
Capacity of drain bowl		10CC		40CC			80CC		230CC	
Capacity of oil bowl		25CC		75CC			160CC		380CC	
Recommended lubricant		ISO VG 32 or equivalent								
Weight		580g		1300g			2360g		5550g	
Constitute	Filter	GF200-06	GF200-08	GF300-08	GF300-10	GF300-15	GF400-10	GF400-15	GF600-20	GF600-25
	Regulator	GR200-06	GR200-08	GR300-08	GR300-10	GR300-15	GR400-10	GR400-15	GR600-20	GR600-25
	Lubricator	GL200-06	GL200-08	GL300-08	GL300-10	GL300-15	GL400-10	GL400-15	GL600-20	GL600-25

① G thread and NPT thread are available.

Symbol

No reflux valve is attached

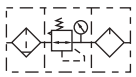

Reflux valve is attached

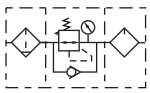

Product feature

1. Oil dripping adopts gap seal structure, which makes the adjustment of oil supply more reliable.
2. Oil feed ring can only make one full turn. The quantity of oil supply, basically taking on linear distribution. The quantity of oil supply can be generally calculated according to the position of graduation ring.
3. Filling of oil while the lubricator is under pressure is made possible.
4. Special drip nozzle structure will produce negative pressure in oil dripping outlet and the mist flow is minimal.
5. Quick and reliable mounting clamps makes it convenient to install and use.
6. The performance of pressure adjustment is reliable with high precision.
7. The efficiency of eliminating moisture and solid grain is high.
8. Three drain types are available: manual drain, semi-auto drain and automatic drain.

Ordering code

GC200 08 M L □ F 1 W G K

Model

GC200: G200 Series F.R.L unit
GC300: G300 Series F.R.L unit
GC400: G400 Series F.R.L unit
GC600: G600 Series F.R.L unit

Port size

Model	Port size
GC200	06: 1/8"
	08: 1/4"
GC300	08: 1/4"
	10: 3/8"
	15: 1/2"
GC400	10: 3/8"
	15: 1/2"
GC600	20: 3/4"
	25: 1"

Drain type

Drain type	Adaptable product's series
Blank: Semi-auto drain	GC200, GC300
M: Manual drain	GC400, GC600
A: Automatic drain	GC300, GC400, GC600

Type code

Blank: Standard
L: Lower pressure ①

Pressure gauge

Blank: Pressure gauge
N: No pressure gauge

Pressure gauge shape

F: Square
C: Circular

Scale

1: MPa
2: psi
3: bar

Filtering grade

Blank: 40 μ m
W: 5 μ m

Thread type

G: G
T: NPT

Code of reflux valve ②

Blank: No reverse flow valve is attached
K: Reverse flow valve is attached

① The maximum work pressure of lower pressure type is 0.4MPa(58psi). ② Please refer to page 146 for details of reflux valve.

Inner structure

GC200

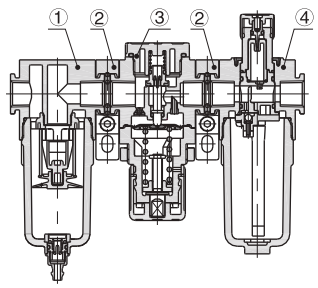

No.	Item	No.	Item
①	G series filter	③	G series regulator
②	Bracket	④	G series lubricator

GC600

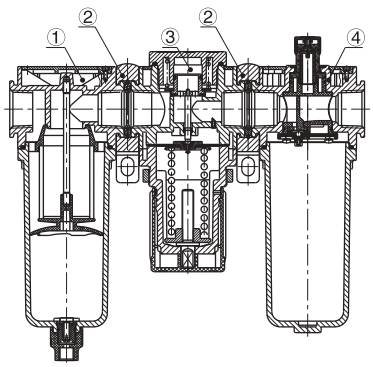

Pressure and feature of flow

Pressure chart

Applicable type: GC200

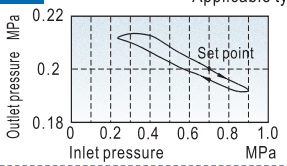

Applicable type: GC300

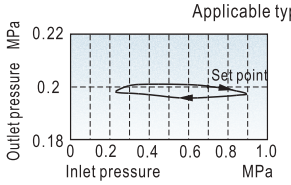

Applicable type: GC400

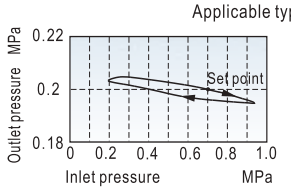

Applicable type: GC600

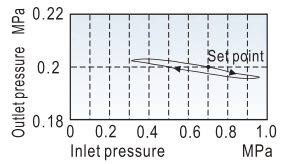

Flow chart

Applicable type: GC200
Inlet pressure: 0.7MPa

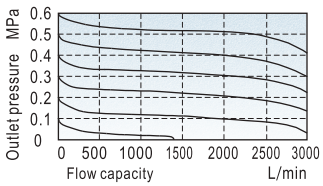

Applicable type: GC300
Inlet pressure: 0.7MPa

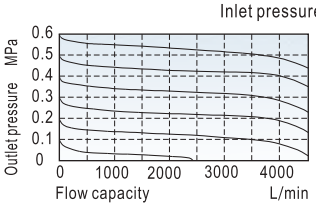

Applicable type: GC400
Inlet pressure: 0.7MPa

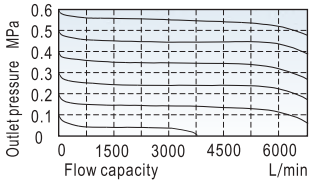

Applicable type: GC600
Inlet pressure: 0.7MPa

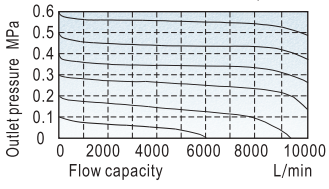

Dimensions

GC200

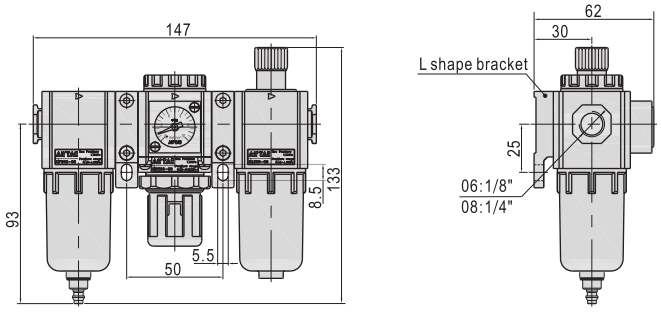

GC300/GC400

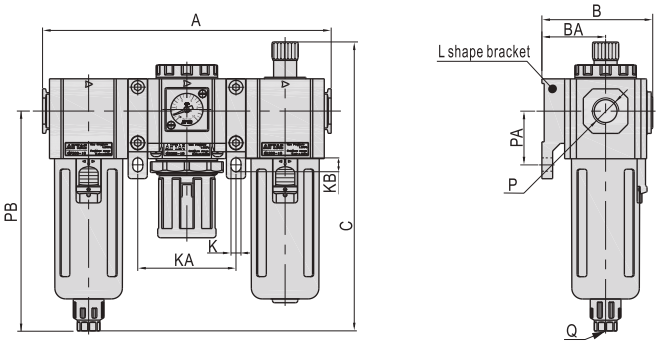

Model\Item	A	B	BA	C	K	KA	KB	P	PA	PB	Q
GC300-08	188	72	41.5	188	6.5	64	9	1/4"	35	143	1/8"
GC300-10	188	72	41.5	188	6.5	64	9	3/8"	35	143	1/8"
GC300-15	188	72	41.5	188	6.5	64	9	1/2"	35	143	1/8"
GC400-10	248	89	50	216	8.5	84	12	3/8"	40	166.5	1/4"
GC400-15	248	89	50	216	8.5	84	12	1/2"	40	166.5	1/4"

GC600

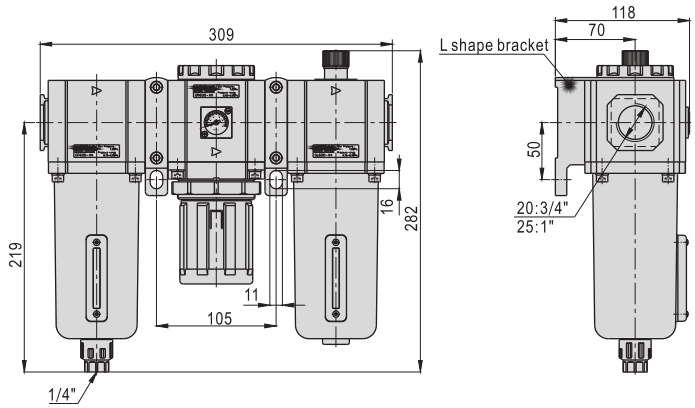

Specification

Model		GFC200-06	GFC200-08	GFC300-08	GFC300-10	GFC300-15	GFC400-10	GFC400-15	GFC600-20	GFC600-25
Fluid		Air								
Port size		1/8"	1/4"	1/4"	3/8"	1/2"	3/8"	1/2"	3/4"	1"
Filtering grade		40 μ m or 5 μ m								
Pressure range		Semi-auto and automatic drain:0.15~0.9MPa(20~130psi);Manual drain:0.05~0.9MPa(7~130psi)								
Max. pressure		1.0MPa(145psi)								
Proof pressure		1.5MPa(215psi)								
Temperature range		–5~70℃								
Capacity of drain bowl		10CC		40CC			80CC		230CC	
Capacity of oil bowl		25CC		75CC			160CC		380CC	
Recommended lubricant		ISO VG 32 or equivalent								
Weight		430g		980g			1950g		4320g	
Constitute	Filter-Regulator	GFR200-06	GFR200-08	GFR300-08	GFR300-10	GFR300-15	GFR400-10	GFR400-15	GFR600-20	GFR600-25
	Lubricator	GL200-06	GL200-08	GL300-08	GL300-10	GL300-15	GL400-10	GL400-15	GL600-20	GL600-25

① G thread and NPT thread are available.

Ordering code

GFC200 08 M L □ F 1 W G K

Model

GFC200: G200 Series FR.L unit
GFC300: G300 Series FR.L unit
GFC400: G400 Series FR.L unit
GFC600: G600 Series FR.L unit

Port size

Model	Port size
GFC200	06: 1/8"
	08: 1/4"
GFC300	08: 1/4"
	10: 3/8"
	15: 1/2"
GFC400	10: 3/8"
	15: 1/2"
GFC600	20: 3/4"
	25: 1"

Drain type

Drain type	Adaptable product's series
Blank: Semi-auto drain	GFC200,GFC300
M: Manual drain	GFC400,GFC600
A: Automatic drain	GFC300, GFC400, GFC600

Type code

Blank: Standard
L: Lower pressure ①

Pressure gauge

Blank: Pressure gauge
N: No pressure gauge

Pressure gauge shape

F: Square
C: Circular

Scale

1: MPa
2: psi
3: bar

Filtering grade

Blank: 40 μ m
W: 5 μ m

Thread type

G: G
T: NPT

Code of reflux valve ②

Blank: No reverse flow valve is attached
K: Reverse flow valve is attached

① The maximum work pressure of lower pressure type is 0.4MPa(58psi). ② Please refer to page 146 for details of reflux valve.

Symbol

No reflux valve is attached

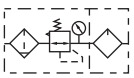

Reflux valve is attached

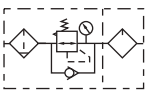

Product feature

1. Quick and reliable mounting clamps makes it convenient to install and use.
2. The performance of pressure adjustment is reliable with high precision.
3. The efficiency of eliminating moisture and solid grain is high.
4. Three drain types are available: manual drain, semi-auto drain and automatic drain.

Inner structure

GFC200

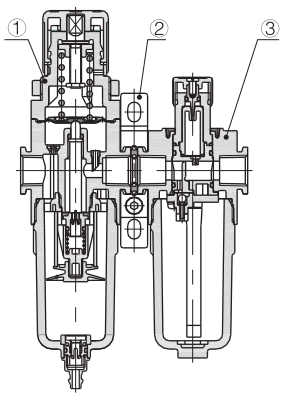

GFC600

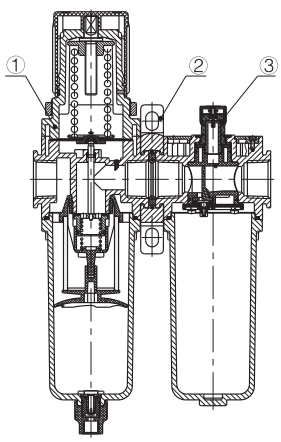

No.	①	②	③
Item	G series filter-regulator	Bracket	G series lubricator

Pressure and feature of flow

Pressure chart

Applicable type: GFC200

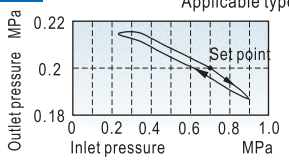

Applicable type: GFC300

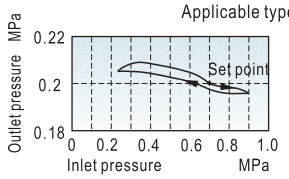

Applicable type: GFC400

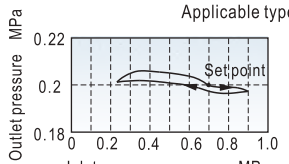

Applicable type: GFC600

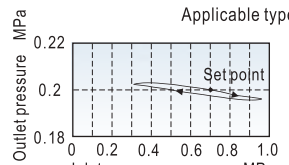

Flow chart

Applicable type: GFC200
Inlet pressure: 0.7MPa

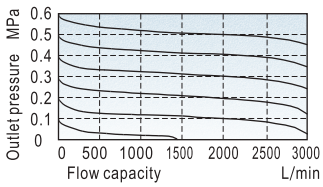

Applicable type: GFC300
Inlet pressure: 0.7MPa

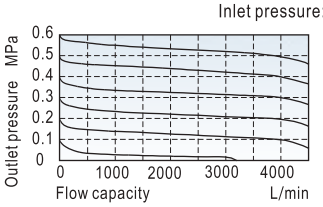

Applicable type: GFC400
Inlet pressure: 0.7MPa

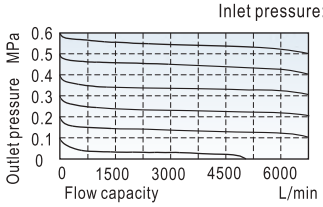

Applicable type: GFC600
Inlet pressure: 0.7MPa

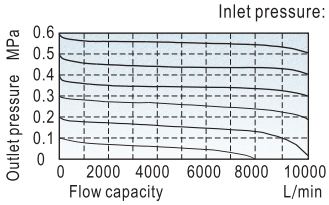

Dimensions

GFC200

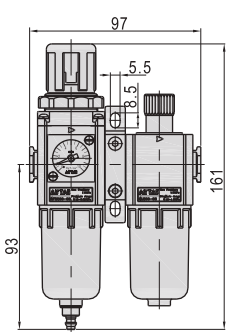

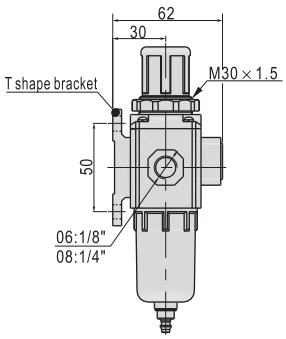

GFC300/GFC400

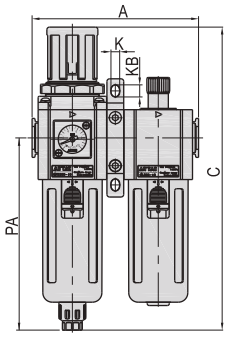

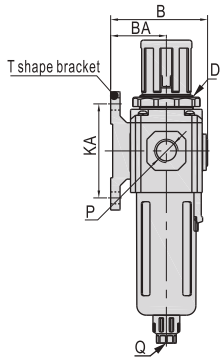

Model\Item	A	B	BA	C	D	K	KA	KB	P	PA	Q
GFC300-08	124	72	41.5	225.5	M40x1.5	6.5	70	9	1/4"	143	1/8"
GFC300-10	124	72	41.5	225.5	M40x1.5	6.5	70	9	3/8"	143	1/8"
GFC300-15	124	72	41.5	225.5	M40x1.5	6.5	70	9	1/2"	143	1/8"
GFC400-10	164	89	50	270.5	M55x2.0	8.5	80	12	3/8"	166.5	1/4"
GFC400-15	164	89	50	270.5	M55x2.0	8.5	80	12	1/2"	166.5	1/4"

GFC600

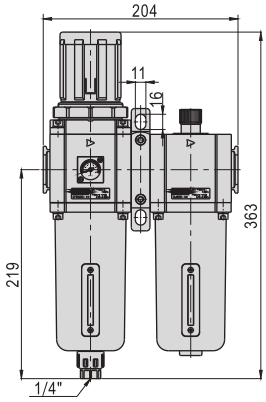

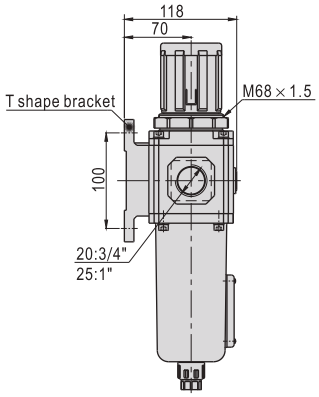

GFR

Specification

Model	GFR200-06	GFR200-08	GFR300-08	GFR300-10	GFR300-15	GFR400-10	GFR400-15	GFR600-20	GFR600-25
Fluid	Air								
Port size	1/8"	1/4"	1/4"	3/8"	1/2"	3/8"	1/2"	3/4"	1"
Filtering grade	40 μ m or 5 μ m								
Pressure range	Semi-auto and automatic drain:0.15~0.9MPa(20~130psi);Manual drain:0.05~0.9MPa(7~130psi)								
Max. pressure	1.0MPa(145psi)								
Proof pressure	1.5MPa(215psi)								
Temperature range	–5~70℃								
Capacity of drain bowl	10CC		40CC			80CC		230CC	
Weight	220g		500g			1030g		2400g	

① G thread and NPT thread are available.

Ordering code

GFR200 08 M L □ □ F 1 W G K

Model
- GFR200: G200 Series filter-regulator
- GFR300: G300 Series filter-regulator
- GFR400: G400 Series filter-regulator
- GFR600: G600 Series filter-regulator

Port size

Model	Port size
GFR200	06: 1/8"
	08: 1/4"
GFR300	08: 1/4"
	10: 3/8"
	15: 1/2"
GFR400	10: 3/8"
	15: 1/2"
GFR600	20: 3/4"
	25: 1"

Drain type

Drain type	Adaptable product's series
Blank: Semi-auto drain	GFR200, GFR300
M: Manual drain	GFR400, GFR600
A: Automatic drain	GFR300, GFR400, GFR600

Type code
- Blank: Standard
- L: Lower pressure ①

Accessories
- Blank: Bracket
- J: No bracket

Pressure gauge
- Blank: Pressure gauge
- N: No pressure gauge

Pressure gauge shape
- F: Square
- C: Circular

Scale
- 1: MPa
- 2: psi
- 3: bar

Filtering grade
- Blank: 40 μ m
- W: 5 μ m

Thread type
- G: G
- T: NPT

Code of reflux valve ②
- Blank: No reverse flow valve is attached
- K: Reverse flow valve is attached

① The maximum work pressure of lower pressure type is 0.4MPa(58psi). ② Please refer to page 146 for details of reflux valve.

Symbol

No reflux valve is attached

Reflux valve is attached

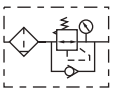

Product feature

1. Embedded square pressure gauge is used to save installation space. (External circular pressure gauge is also optional).
2. The pressed-in self-locking mechanism can prevent the abnormal movement of the set pressure caused by external interfere.
3. Balanced design is adopted for the pressure adjustment mechanism.
4. In addition to standard type, lower pressure type is optional (The highest adjustable pressure is 0.4MPa).
5. Unique diversion structure spins the air flowing through to effectively sparate the liquid from the air and reliabily filter the solid grain.
6. The filtering grade includes 5 μ m and 40 μ m (optional).
7. Three drain types are available: manual drain, semi-auto drain and automatic drain.
8. The bracket can be selected for installation.

Inner structure and material of major parts

GFR200

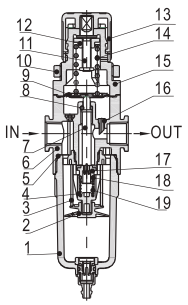

Semi-Auto drain

GFR600

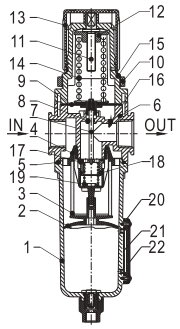

Semi-Auto drain

No.	Item	Material	
1	Drain bowl	Aluminum alloy(GFR600)\PC(others)	
2	Umbrella baffle	High viscosity POM	
3	Filter core	GFR600	Agglomerated by brass grain
		others 40 μ m	Agglomerated by brass grain
		others 5 μ m	Makrolon fiber
4	Air guider	High viscosity POM	
5	O-ring	NBR	
6	Body of filter-regulator	Aluminum alloy	
7	Adjusting spool	Brass (GFR600)\POM(others)	
8	O-ring	NBR	
9	Diaphragm	SUS304 & Rubber	
10	Fixation ring cap	Aluminum alloy(GFR600)\POM(others)	
11	Adjusting spindle	Steel	
12	Regulator nut	Steel	
13	Pressure knob	POM	
14	Spring	SWC	
15	Adjusting seat	Aluminum alloy(GFR600)\POM(others)	
16	Feedback tube	POM	
17	Adjusting plug	Brass & Rubber	
18	O-ring	NBR	
19	Spring	SUS304	
20	Liquid meter cover	SPCC	
21	Liquid meter seal	VITON	
22	Liquid meter inside	PC	

Pressure and feature of flow

Pressure chart

Applicable type: GFR200

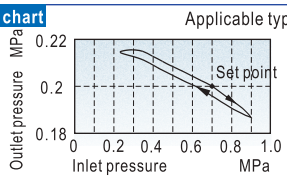

Applicable type: GFR300

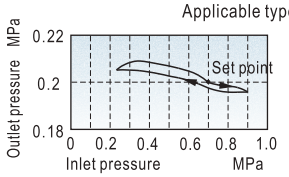

Applicable type: GFR400

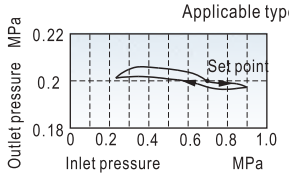

Applicable type: GFR600

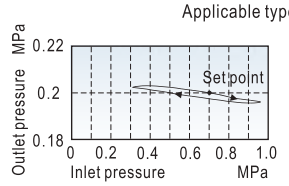

Flow chart

Applicable type: GFR200
Inlet pressure: 0.7MPa

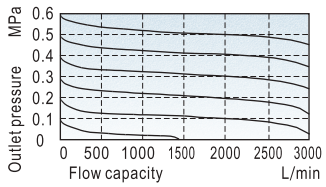

Applicable type: GFR300
Inlet pressure: 0.7MPa

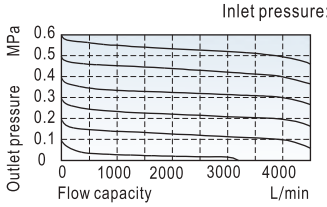

Applicable type: GFR400
Inlet pressure: 0.7MPa

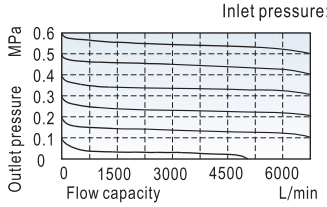

Applicable type: GFR600
Inlet pressure: 0.7MPa

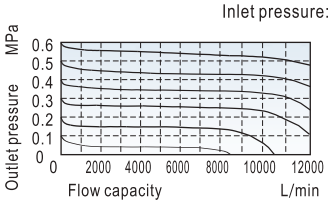

Selection of drain mode

GFR200		GFR300\GFR400\GFR600		
Manual drain	Semi-auto drain	Manual drain	Semi-auto drain	Automatic drain

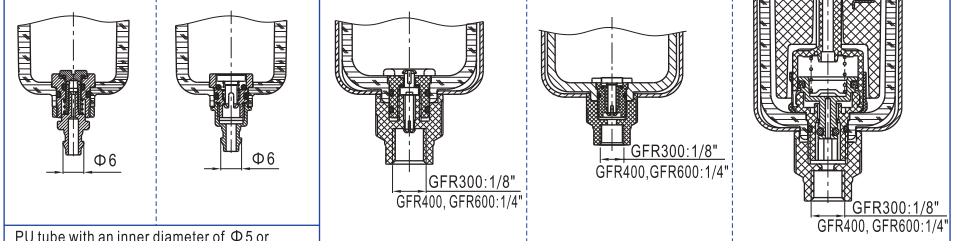

PU tube with an inner diameter of Φ5 or Φ5.5mm is recommended

Dimensions

GFR200

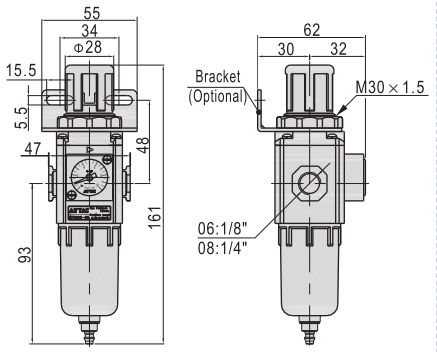

GFR600

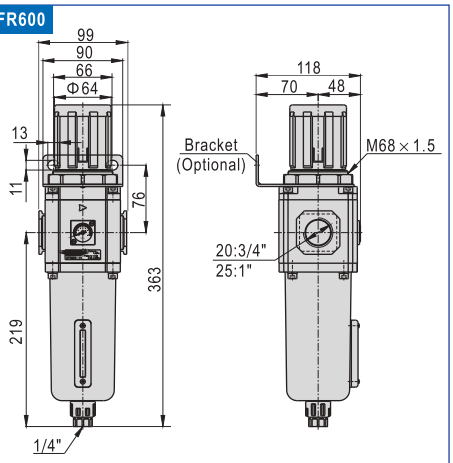

GFR300/GFR400

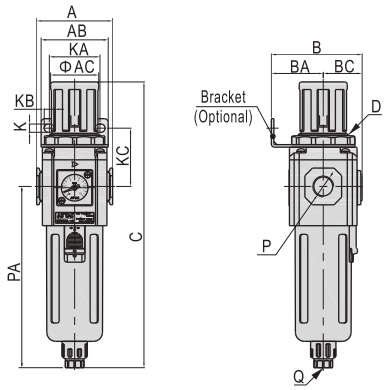

Model\Item	A	AB	AC	B	BA	BC	C	D
GFR300-08	60	53	38	72	41	31	225.5	M40x1.5
GFR300-10	60	53	38	72	41	31	225.5	M40x1.5
GFR300-15	60	53	38	72	41	31	225.5	M40x1.5
GFR400-10	80	72	52	90	50	40	270.5	M55x2.0
GFR400-15	80	72	52	90	50	40	270.5	M55x2.0

Model\Item	K	KA	KB	KC	P	PA	Q
GFR300-08	6.5	40	8	46	1/4"	143	1/8"
GFR300-10	6.5	40	8	46	3/8"	143	1/8"
GFR300-15	6.5	40	8	46	1/2"	143	1/8"
GFR400-10	8.5	52	11	53	3/8	166.5	1/4"
GFR400-15	8.5	52	11	53	1/2"	166.5	1/4"

Regulating way

The use of GFR series regulators is the same as the SDR series, please refer to Page 164 for details.

GF

Specification

Model	GF200-06	GF200-08	GF300-08	GF300-10	GF300-15	GF400-10	GF400-15	GF600-20	GF600-25
Fluid	Air								
Port size	1/8"	1/4"	1/4"	3/8"	1/2"	3/8"	1/2"	3/4"	1"
Filtering grade	40 μ m or 5 μ m								
Pressure range	Semi-auto and automatic drain:0.15~0.9MPa(20~130psi);Manual drain:0.05~0.9MPa(7~130psi)								
Proof pressure	1.5MPa(215psi)								
Temperature range	–5~70℃								
Capacity of drain bowl	10CC		40CC			80CC		230CC	
Weirht	135g		360g			680g		1440g	

① G thread and NPT thread are available.

Ordering code

GF200 08 M □ W G

Model

GF200: G200 Series Filter
GF300: G300 Series Filter
GF400: G400 Series Filter
GF600: G600 Series Filter

Thread type

G: G
T: NPT

Filtering grade

Blank: 40 μ m
W: 5 μ m

Port size

Model	Port size
GF200	06: 1/8"
	08: 1/4"
GF300	08: 1/4"
	10: 3/8"
	15: 1/2"
GF400	10: 3/8"
	15: 1/2"
GF600	20: 3/4"
	25: 1"

Accessories

Blank: Bracket
J: No bracket(standard configuration)

Drain type

Drain type	Addable product's series
Blank: Semi-auto drain	GF200, GF300
M: Manual drain	GF400, GF600
A: Automatic drain	GF300, GF400, GF600

Symbol

Product feature

1. Unique diversion structure spins the air flowing through to effectively separate the liquid from the air and reliably filter the solid grain.
2. It has low pressure loss, high efficiency in separating water and large drain bowl capacity.
3. Filtering grade includes 5 μ m and 40 μ m (Optional).
4. Three drain types are available: manual drain, semi-auto drain and automatic drain.
5. The bracket can be selected for installation.

Inner structure and Material of major parts

GF200

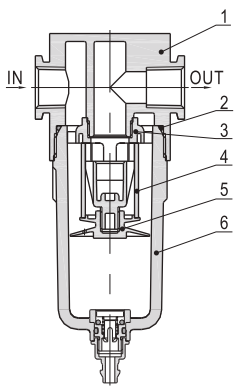

Semi-Auto drain

GF600

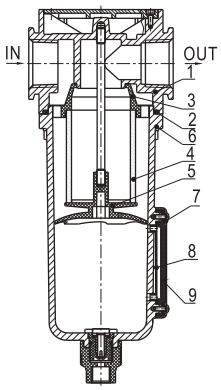

Semi-Auto drain

No.	Item	Material
1	Body	Aluminum alloy
2	O-ring	NBR
3	Air guide	High viscosity POM
4	Filter core	GF600 Agglomerated by bronze grain
		Others 40 μ m: Agglomerated by bronze grain\5 μ m: Makrolon fiber
5	Umbrella baffle	High viscosity POM
6	Drain bowl	Aluminum alloy(GF600)\PC(Others)
7	Liquid meter cover	SPCC
8	Liquid meter seal	VITON
9	Liquid meter inside cover	PC

Flow chart

Applicable type: GF200

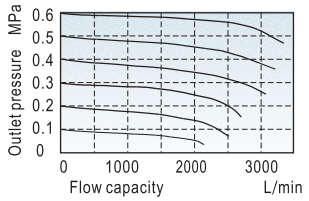

Applicable type: GF300

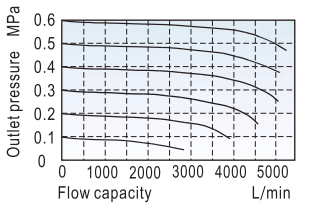

Applicable type: GF400

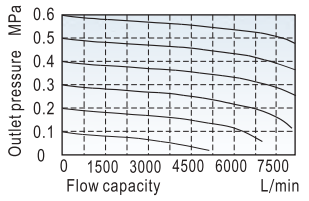

Applicable type:GF600

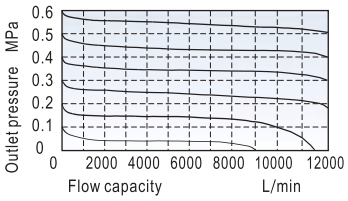

Selection of drain mode

GF series drain mode is the same as the GFR series, please refer to the specific P139.

Dimensions

GF200

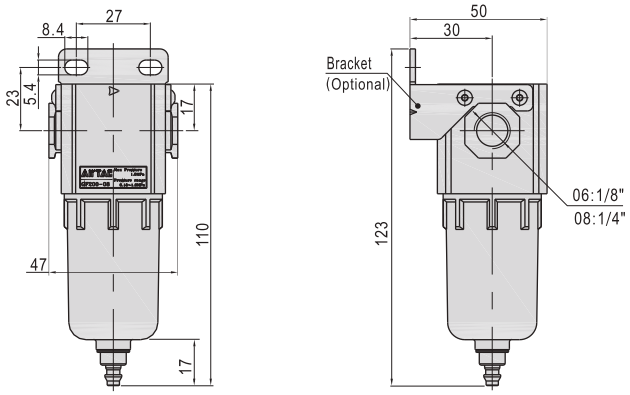

GF300, GF400

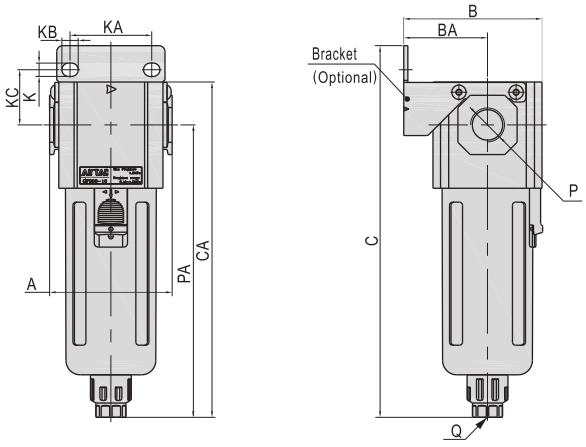

Model\Item	A	B	BA	C	CA	K	KA	KB	KC	P	PA	Q
GF300-08	60	67.5	41	182	164	6.5	40	8	27	1/4"	143	1/8"
GF300-10	60	67.5	41	182	164	6.5	40	8	27	3/8"	143	1/8"
GF300-15	60	67.5	41	182	164	6.5	40	8	27	1/2"	143	1/8"
GF400-10	80	85.5	50	208	191.5	8.5	55	11	33.5	3/8"	166.5	1/4"
GF400-15	80	85.5	50	208	191.5	8.5	55	11	33.5	1/2"	166.5	1/4"

GF600

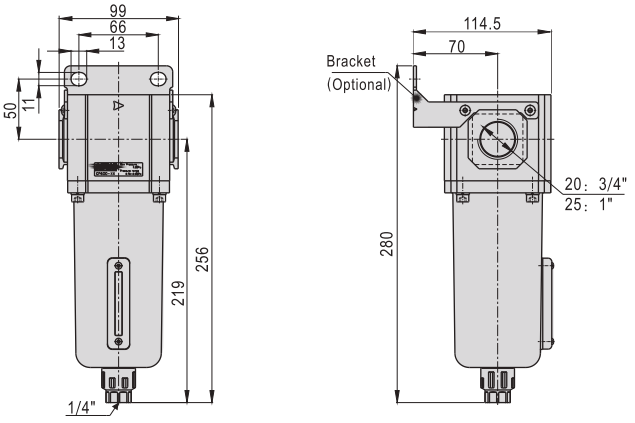

GR

Symbol

No Reverse Flow valve is attached

Reverse Flow valve is attached

Product feature

1. Embedded square pressure gauge is used to save installation space. (External circular pressure gauge is also optional).
2. The pressed-in self-locking mechanism can prevent the abnormal movement of the set pressure caused by external interfere.
3. Balanced design is adopted for the pressure adjustment mechanism.
4. In addition to panel installation, the bracket is optional for installation.
5. In addition to standard type, lower pressure type is optional (the highest adjustable pressure is 0.4MPa).

Specification

Model	GR200-06	GR200-08	GR300-08	GR300-10	GR300-15	GR400-10	GR400-15	GR600-20	GR600-25
Fluid	Air								
Port size	1/8"	1/4"	1/4"	3/8"	1/2"	3/8"	1/2"	3/4"	1"
Pressure range	0.05~0.9MPa(7~130psi)								
Max. pressure	1.0MPa(145psi)								
Proof pressure	1.5MPa(215psi)								
Temperature range	−20~70℃								
Weight	160g		350g			720g		1700g	

① G thread and NPT thread are available.

Ordering code

GR200 08 L □ □ F 1 G K

Model
- GR200: G200 Series Regulator
- GR300: G300 Series Regulator
- GR400: G400 Series Regulator
- GR600: G600 Series Regulator

Port size

Model	Port size
GR200	06: 1/8"
	08: 1/4"
GR300	08: 1/4"
	10: 3/8"
	15: 1/2"
GR400	10: 3/8"
	15: 1/2"
GR600	20: 3/4"
	25: 1"

Type code
- Blank: Standard
- L: Lower pressure ①

Accessories
- Blank: Bracket
- J: No bracket(standard configuration)

Pressure gauge
- Blank: Pressure gauge
- N: No pressure gauge

Pressure gauge shape
- F: Square
- C: Circular

Scale
- 1: MPa
- 2: psi
- 3: bar

Thread type
- G: G
- T: NPT

Code of reflux valve
- Blank: No Reverse flow valve is attached
- K: Reverse flow valve is attached

① The maximum work pressure of lower pressure type is 0.4MPa(58psi). ② Please refer to page 146 for details of reflux valve.

Inner structure and Material of major parts

GR200

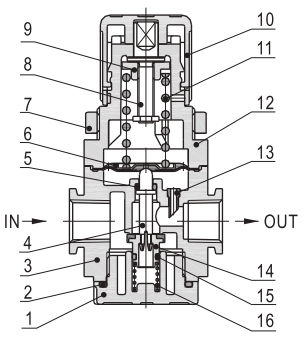

GR600

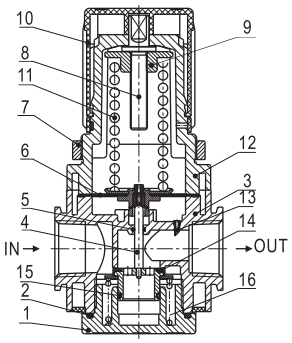

No.	Item	Material	No.	Item	Material
1	Valve cap	Aluminum alloy	9	Regulator nut	Steel
2	O-ring	NBR	10	Pressure knob	POM
3	Body	Aluminum alloy	11	Pressure spring	SWC
4	Spool	Brass(GR600)\POM(others)	12	Adjusting seat	Aluminum alloy(GR600)\POM(others)
5	O-ring	NBR	13	Feed back tuble	POM
6	Diaphragm	SUS304 &Rubber	14	Pressure plug	Brass & steel
7	Fixed ring	Aluminum alloy(GR600)\POM(others)	15	O-ring	NBR
8	Adjusting spindle	Steel	16	Spring	Stainless steel

Pressure and feature of flow

Pressure chart

Applicable type: GR200

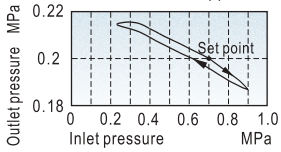

Applicable type: GR300

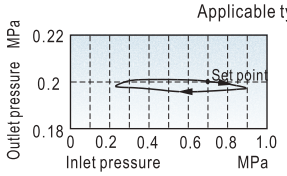

Applicable type: GR400

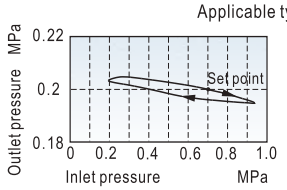

Applicable type: GR600

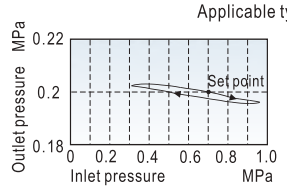

Flow chart

Applicable type: GR200
Inlet pressure: 0.7MPa

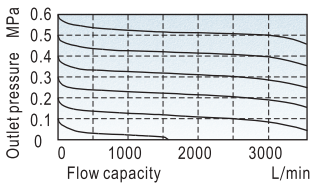

Applicable type: GR300
Inlet pressure: 0.7MPa

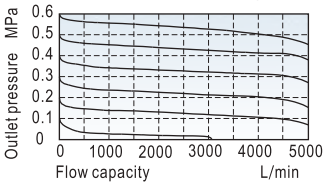

Applicable type: GR400
Inlet pressure: 0.7MPa

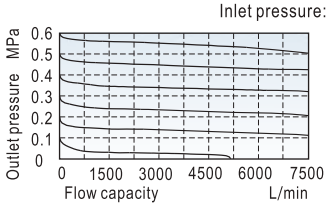

Applicable type: GR600
Inlet pressure: 0.7MPa

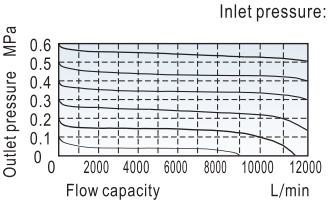

Dimensions

GR200

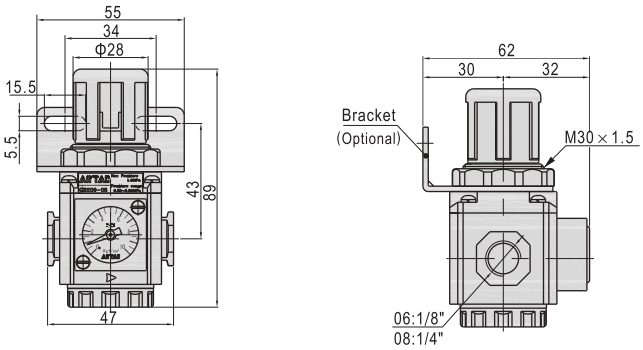

GR300, GR400

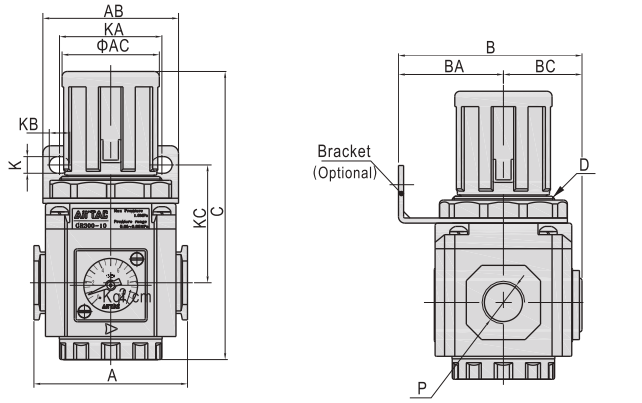

Model\Item	A	AB	AC	B	BA	BC	C	D	K	KA	KB	KC	P
GR300－08	60	53	38	72	41	31	112.5	M40x1.5	6.5	40	8	46	1/4"
GR300－10	60	53	38	72	41	31	112.5	M40x1.5	6.5	40	8	46	3/8"
GR300－15	60	53	38	72	41	31	112.5	M40x1.5	6.5	40	8	46	1/2"
GR400－10	80	72	52	90	50	40	140.5	M55x2.0	8.5	55	11	53	3/8"
GR400－15	80	72	52	90	50	40	140.5	M55x2.0	8.5	55	11	53	1/2"

GR600

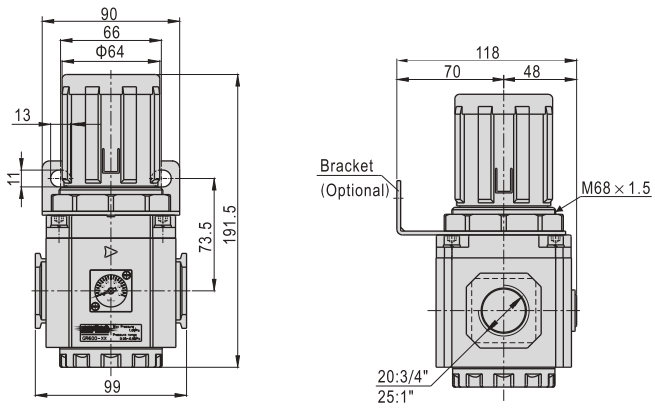

Regulating way

The use of GR series regulators is the same as the SDR series, please refer to Page 164 for details.

GL

Specification

Model	GL200-06	GL200-08	GL300-08	GL300-10	GL300-15	GL400-10	GL400-15	GL600-20	GL600-25
Fluid	Air								
Port size	1/8"	1/4"	1/4"	3/8"	1/2"	3/8"	1/2"	3/4"	1"
Pressure range	0.05~0.9MPa(7~130psi)								
Proof pressure	1.5MPa(215psi)								
Temperature range	−5~70℃								
Recommended lubricant	ISO VG 32 or equivalent								
Capacity of oil bowl	25CC		75CC			160CC		380CC	
Weight	130g		360g			670g		1300g	

① G thread and NPT thread are available.

Ordering code

GL200 08 □ G

Model

GL200: G200 Series Lubricator
GL300: G300 Series Lubricator
GL400: G400 Series Lubricator
GL600: G600 Series Lubricator

Thread type

G: G
T: NPT

Port size

Model	Port size
GL200	06: 1/8"
	08: 1/4"
GL300	08: 1/4"
	10: 3/8"
	15: 1/2"
GL400	10: 3/8"
	15: 1/2"
GL600	20: 3/4"
	25: 1"

Accessories

Blank: Bracket
J: No bracket(standard configuration)

Symbol

Product feature

1. The structure of oil dripping adopts gap seal type, which makes the adjustment of oil supply more reliable.
2. Oil feed ring can only make one full turn.The quantity of oil supply basically takes on linear distribution. The quantity of oil supply can be generally calculated according to the position of graduation ring.
3. Special drip nozzle structure will produce negative pressure in oil dripping outlet and the mist flow is minimal.
4. Filling of oil while the lubricator is under pressure is made possible, and the oil bowl is large;
5. The bracket can be selected for installation.

Inner structure and Material of major parts

GL200

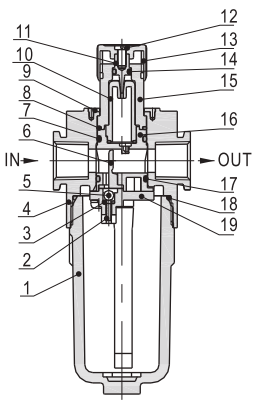

GL600

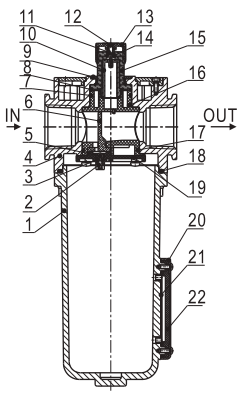

No.	Item	Material
1	Oil bowl	Aluminum alloy (GL600)\PC(others)
2	Adjusting spring	Stainless steel
3	O-ring	NBR
4	Body of lubricator	Aluminum alloy
5	Steel ball	Stainless steel
6	Distance block	TPU
7	O-ring	NBR
8	O-ring	NBR
9	Indicating ring	POM
10	Drip pipe	PC
11	Ejector pin	Brass
12	Screw	Carbon steel
13	Adjusting ring	POM
14	O-ring	NBR
15	Bowl	PC
16	Sprayer body	PA66
17	O-ring	NBR
18	O-ring	NBR
19	Sprayer bottom cap	POM
20	Liquid meter cover	SPCC
21	Liquid meter seal	NBR
22	Liquid meter inside cover	PC

Flow chart

Applicable type:GL200

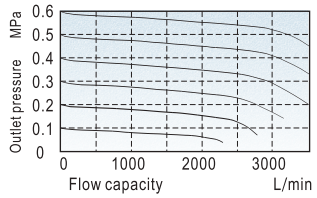

Applicable type:GL300

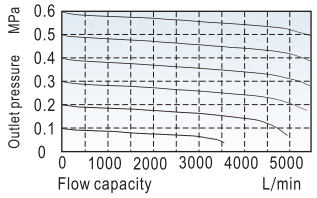

Applicable type:GL400

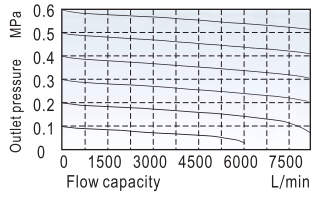

Applicable type:GL600

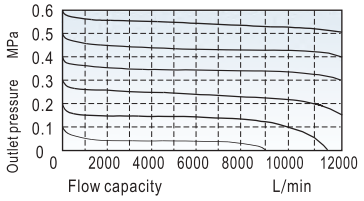

Dimensions

GL200

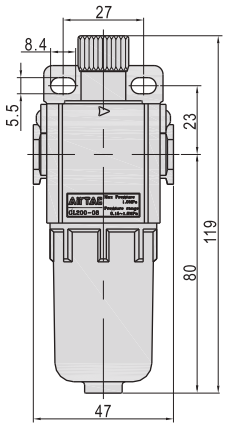

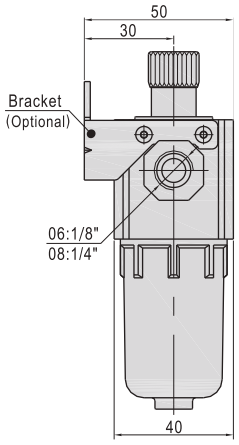

GL300/GL400

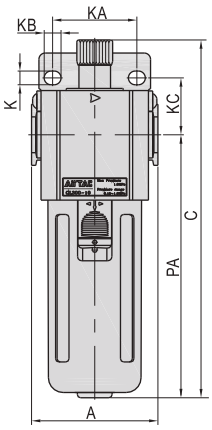

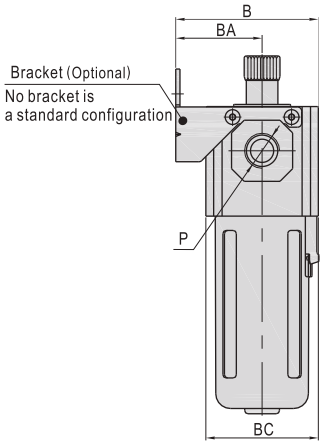

Model\Item	A	B	BA	BC	C	K	KA	KB	KC	P	PA
GL300-08	60	68	41	53.5	169	6.5	40	8	27	1/4"	125
GL300-10	60	68	41	53.5	169	6.5	40	8	27	3/8"	125
GL300-15	60	68	41	53.5	169	6.5	40	8	27	1/2"	125
GL400-10	80	85.5	50	71	190	8.5	55	11	33.5	3/8"	142
GL400-15	80	85.5	50	71	190	8.5	55	11	33.5	1/2"	142

GL600

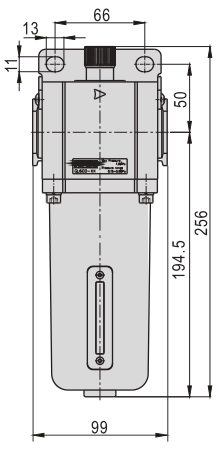

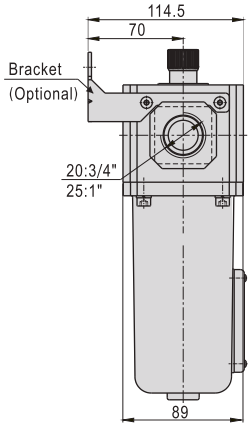

GL

GA315

Product feature

1. This reverse flow valve can be used with G series regulator and also can be ordered individually.
2. When it is used with G series regulator, one only needs to change the seal board in the back of regulator for the reverse flow valve. It is convenient to install and won't change the external dimension of regulator.

Applicable products

Reflux valve type	Applicable products 's type
GA315	GC200, 300, 400, 600
	GFC200, 300, 400, 600
	GFR200, 300, 400, 600
	GR200, 300, 400, 600

Working principle

Normally

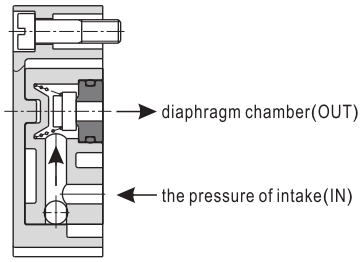

Exhaust

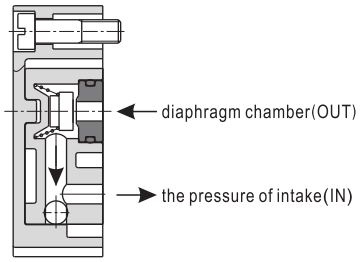

Normally, as the pressure of intake (IN) is higher than the set value (pressure of outlet), the reverse flow valve closes; if the pressure of intake (IN) is cut off and starts exhaust, reverse flow valve opens. The pressure of diaphragm chamber is exhausted from IN orifice. At this moment, the pressure of diaphragm chamber decreases and the diaphragm is pressed down by the force from adjusting spring to open valve. The pressure from outlet is exhausted from IN port.

Inner structure

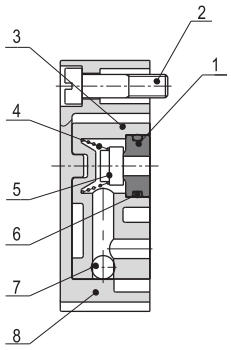

No.	Item	Material
1	Plug	Brass
2	Screw	Steel
3	Reverse flow valve's body	POM
4	Spring	SUS304
5	Gasket	NBR
6	O-ring	NBR
7	Steel ball	SUS304
8	Reflux valve's crust	Aluminum alloy

Ordering code

When G series regulator is assembled with the reverse flow valve, the valve can be ordered together with the standard product. What needs to do is to add "-K" to the end of the ordering code of the standard product. Please refer to relevant content for more detailed order method.

Example for assemble the reflux valve

Take GR300 for example,it is in the same way to use products of other series.

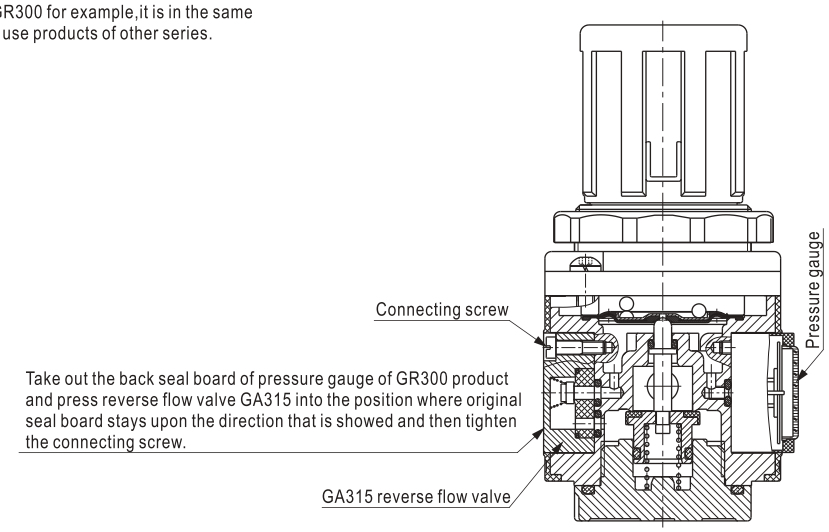

Preparation unit——Metallic bowl

GC□C, GFC□C, GFR□C, GF□C, GL□C Series

Ordering code

GC200C 08 M L □ F 1 W G K

GFC200C 08 M L □ F 1 W G K

GFR200C 08 M L □ □ F 1 W G K

Model

GC200C: G200 Series F.R.L unit(Metallic bowl)
GC300C: G300 Series F.R.L unit(Metallic bowl)
GC400C: G400 Series F.R.L unit(Metallic bowl)
GFC200C: G200 Series FR.L unit(Metallic bowl)
GFC300C: G300 Series FR.L unit(Metallic bowl)
GFC400C: G400 Series FR.L unit(Metallic bowl)
GFR200C: G200 Series filter-regulator(Metallic bowl)
GFR300C: G300 Series filter-regulator(Metallic bowl)
GFR400C: G400 Series filter-regulator(Metallic bowl)

Code of reverse flow valve

Blank: No reverse flow valve is attached
K: Reverse flow valve is attached

Thread type

G: G
T: NPT

Filtering grade

Blank: 40 μ m
W: 5 μ m

Scale

1: MPa
2: psi
3: bar

Pressure gauge shape

F: Square
C: Circular

Pressure gauge

Blank: Pressure gauge
N: No pressure gauge

Port size

Model	Port size
GC200C GFC200C, GFR200C	06: 1/8" 08: 1/4"
GC300C GFC300C, GFR300C	08: 1/4" 10: 3/8" 15: 1/2"
GC400C GFC400C, GFR400C	10: 3/8" 15: 1/2"

Drain type

Drain type	Adaptable product's series
Blank: Semi-auto drain	GC200C, GC300C, GC400C GFC200C, GFC300C, GFC400C GFR200C, GFR300C, GFR400C
M: Manual drain	
A: Automatic drain	GC300C, GC400C, GFC300C GFC400C, GFR300C, GFR400C

Type code

Blank: Standard
L: Lower pressure ①

Accessories

Product's series	Accessories
GFR200C~400C	Blank: Bracket
	J: No bracket (standard configuration)
Other series	Not code

① The maximum work pressure of lower pressure type is 0.4MPa(58psi). ② Please refer to page 144 for details of reflux valve.

GF200C 08 M □ W G

Model

GF200C: G200 Series Filter(Metallic bowl)
GF300C: G300 Series Filter(Metallic bowl)
GF400C: G400 Series Filter(Metallic bowl)

Thread type

G: G
T: NPT

Filtering grade

Blank:40 μ m
W:5 μ m

Port size

Model	Port size
GF200C	06: 1/8"
	08: 1/4"
GF300C	08: 1/4"
	10: 3/8"
	15: 1/2"
GF400C	10: 3/8"
	15: 1/2"

Accessories

Blank: Bracket
J: No bracket(standard configuration)

Drain type

Drain type	Addable product's series
Blank: Semi-auto drain	GF200C, GF300C
M: Manual drain	GF400C
A: Automatic drain	GF300C, GF400C

GL200C 08 □ G

Model

GL200C: G200 Series Lubricator(Metallic bowl)
GL300C: G300 Series Lubricator(Metallic bowl)
GL400C: G400 Series Lubricator(Metallic bowl)

Thread type

G: G
T: NPT

Port size

Model	Port size
GL200C	06: 1/8"
	08: 1/4"
GL300C	08: 1/4"
	10: 3/8"
	15: 1/2"
GL400C	10: 3/8"
	15: 1/2"

Accessories

Blank: Bracket
J: No bracket(standard configuration)

Product feature

1. The metallic bowl type is upgraded G series. Besides its speciality are the same as G series, it's below speciality:
2. The bowl is made of metal. It is radiation-proof, excellent aging characteristic, and which allows for outdoor application.
3. Metal bowls are suitable for applications requiring higher pressure or rugged environment.
4. Fuss free installation for most applications.

The corresponding table of Metallic bowl type with standard type

Metallic bowl type	Corresponding standard type
GC200C, 300C, 400C	GC200, 300, 400
GFC200C, 300C, 400C	GFC200, 300, 400
GFR200C, 300C, 400C	GFR200, 300, 400
GF200C, 300C, 400C	GF200, 300, 400
GL200C, 300C, 400C	GL200, 300, 400

Note)
The style, pressure chart, flow chart, Inner structure, dimension etc, are the same as standard type. Please refer to relevant content for details.

GV Series soft-start valve

Specification

Model	GV200-06	GV200-08	GV300-08	GV300-10	GV300-15	GV400-10	GV400-15
Fluid	Air						
Port size	1/8"	1/4"	1/4"	3/8"	1/2"	3/8"	1/2"
Pressure range	0.25~0.9MPa(35~130psi)						
Proof pressure	1.5MPa(215psi)						
Temperature range	–20~70℃						
Acting type	Solenoid control						
Exhaust port size	1/4"		3/8"			1/2"	
Power connection	Terminal、Grommet						
Standard voltage	AC220V, 110V, 24V(50\60Hz); DC12V, 24V						
Voltage range	-15%~+10%						
Insulation	Class B						
Power consumption	AC: 3.5VA; DC: 2.5W						
Option pressure gauge	F: Square pressure gauge ; C: Circular pressure gauge						
Suitable F.R.L type	GC200–06	GC200–08	GC300–08	GC300–10	GC300–15	GC400–10	GC400–15

① G thread and NPT thread are available.

Ordering code

GV300 10 □ □ F 1 A □ G

Model
- GV200: 200 Series soft start-up valve
- GV300: 300 Series soft start-up valve
- GV400: 400 Series soft start-up valve

Port size

Model	Port size
200 Series	06: 1/8"
	08: 1/4"
300 Series	08: 1/4"
	10: 3/8"
	15: 1/2"
400 Series	10: 3/8"
	15: 1/2"

Accessories
- Blank: Bracket
- J: No bracket(standard configuration)

Pressure gauge
- Blank: Pressure gauge
- N: No pressure gauge

Pressure gauge shape
- F: Square
- C: Circular

Voltage
- A: AC220V(50/60Hz)
- B: DC24V
- C: AC110V(50/60Hz)
- E: AC24V(50/60Hz)
- F: DC12V

Electrical entry
- Blank: Terminal
- I: Grommet

Thread type
- G: G
- T: NPT

Scale
- 1: MPa
- 2: psi
- 3: bar

Note: When it is used with F.R.L. combination, extra mounting bracket is need. Please refer to P150 for order detail.

Symbol

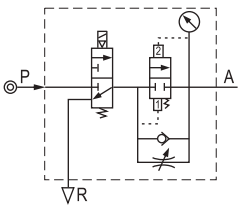

Product feature

Soft start-up valve is used to input compressed air into pneumatic system slowly and has the effect of safety and protection. Air intake is connected with the input P of Soft start-up valve. If coil is energized, the 3/2 way valve opens. At this time, a little air comes to output A through throttle valve, which increases the pressure of the system gradually; when the output pressure is equal the half of the input pressure, Soft start-upvalve completely opens and the flow at this time reaches the highest value of itself. When the coil is de-energized, air intake P closes, the air returns to R orifice through reflux valve and is quickly exhausted. The pressure of the system falls to zero, which protects the whole system.

Attention

Manually adjust the "+" and "-"throttle screw at the bottom of the soft start-up valve as per the requirement of start speed. It shall go slowly, other wise sudden acting of the product or system shall be caused with a heavy impact.

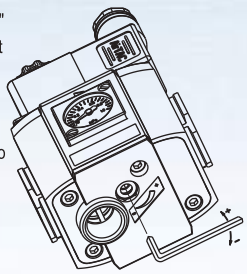

Inner structure

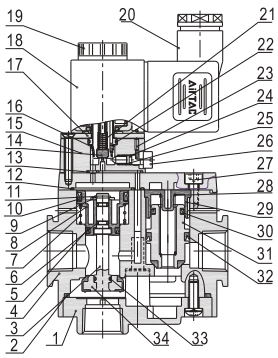

No.	Item	No.	Item	No.	Item
1	Bottom cover	13	Gasket	25	Spring
2	Gasket	14	Gasket	26	Manual override
3	Spool	15	Pilot kit	27	Fixed screw
4	Body	16	spring	28	Spring
5	O-ring	17	Fixed lpate	29	Valve spool
6	O-ring	18	Coil set	30	O-ring
7	Spring	19	Nut	31	Valve spool
8	Inlet piston	20	Connector	32	O-ring
9	Piston gasket	21	Spring	33	O-ring
10	O-ring	22	O-ring	34	Inlet plug
11	Snap ring	23	Manual override block		
12	Gasket	24	O-ring		

Dimensions

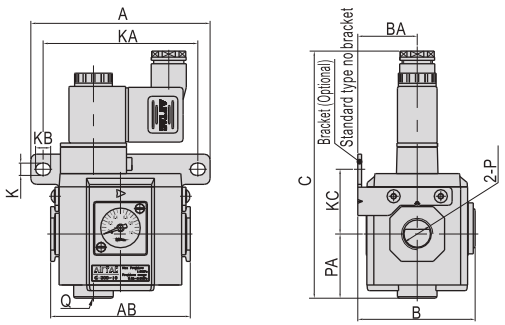

Item\Model	GV200		GV300			GV400	
	06	08	08	10	15	10	15
A	80		95			120	
AB	59		74			90	
B	57		62.2			80	
BA	24.5		31.5			40.5	
C	123.5		131			142.5	
K	5.5		6.5			8.5	
KA	67		82			102	
KB	8		8			11	
KC	30.5		34.5			39	
P	1/8"	1/4"	1/4"	3/8"	1/2"	3/8"	1/2"
PA	30		34			40.5	
Q	1/4"		3/8"			1/2"	

GZ Series safe on-off valve

Specification

Model	GZ200-06	GZ200-08	GZ300-08	GZ300-10	GZ300-15	GZ400-10	GZ400-15
Fluid	Air						
Port size	1/8"	1/4"	1/4"	3/8"	1/2"	3/8"	1/2"
Exhaust port size	1/4"		3/8"			1/2"	
Acting type	Manual						
Valve type	3 port 2 way						
Pressure range	0~0.9MPa(0~130psi)						
Proof pressure	1.5MPa(215psi)						
Temperature range	−20~70℃						
Operation angle	90°						
Suitable F.R.L type	GC200−06	GC200−08	GC300−08	GC300−10	GC300−15	GC400−10	GC400−15

① G thread and NPT thread are available.

Symbol

Product feature

1. It is module design and can be used with G series F.R.L. combination by bracket.
2. This valve can be used as manual 3/2 way valve.
3. Visual indication marked EXH/SUP.
4. This valve meets the standard on installation conducted by operator specified by OSHA (Occupational Safety & Health Administration). When the machinery is maintained and serviced, the purge valve (Safe on-off valve) for remaining pressure shall be used to eliminate the remaining pressure when the air source is cut off. Valve must be locked to prevent accidental operation by a third party during maintenance. This prevents accidental system pressurization & cylinder actuation which can result in injuries to the machine operator.

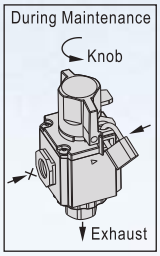

Ordering code

GZ300 10 □ G

Model

GZ200: 200 Series soft on-off valve
GZ300: 300 Series soft on-off valve
GZ400: 400 Series soft on-off valve

Thread type

T: NPT
G: G

Port size

Model	Port size
200 Series	06: 1/8"
	08: 1/4"
300 Series	08: 1/4"
	10: 3/8"
	15: 1/2"
400 Series	10: 3/8"
	15: 1/2"

Accessories

Blank: Bracket
J: No bracket(standard configuration)

Note : When it is used with F.R.L. combination, extra mounting bracket needed. Please refer to P150 for order detail.

Inner structure

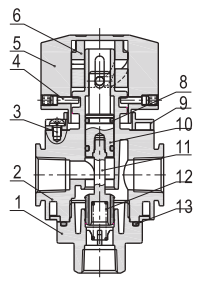

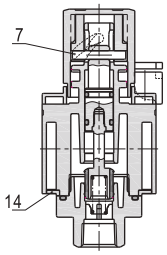

No.	Item	No.	Item
1	Valve cap	8	O-ring
2	Body	9	Cover
3	Screw	10	Spool
4	Operating screw	11	Plug
5	Adjusting screw	12	Spring
6	Special screw	13	O-ring
7	Fixing plate	14	Cover

Dimensions

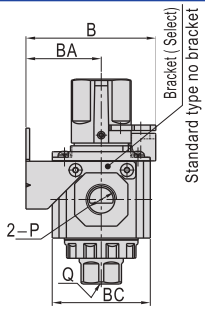

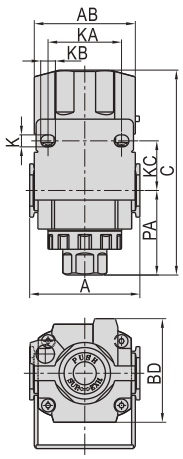

Item\Model	GZ200		GZ300			GZ400	
	06	08	08	10	15	10	15
A	47		60			75	
AB	42		55			65	
B	52.6		70.7			83.9	
BA	30		41			50	
BC	40		53.5			64	
BD	42.5		56.5			66	
C	89		112.5			134	
K	5.5		6.5			8.5	
KA	27		40			55	
KB	8.5		8			11	
KC	23		27			33.5	
P	1/8"	1/4"	1/4"	3/8"	1/2"	3/8"	1/2"
PA	36.5		46			58.5	
Q	1/4"		3/8"			1/2"	

GA

Product feature

1. It is installed between G series regulator (or filter & regulator) and G series Lubricator. The air flow is divided by the device that one enters Lubricator to supply oil for lubrication and the other (the second way) directly enters the equipment.
2. Several kinds of bracket can be selected to connect regulator and lubricator. Optional brackets are type T, type L and type U.

Inner structure

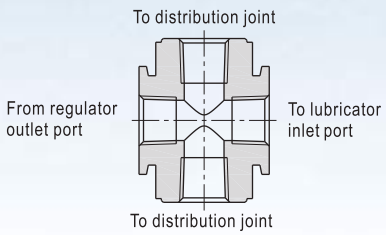

Specification

Model	GA200-06	GA200-08	GA300-08	GA300-10	GA400-10	GA400-15	GA600-20	GA600-25
Fluid	Air							
Port size	1/8"	1/4"	1/4"	3/8"	3/8"	1/2"	3/4"	1"
Way number	Four							
Pressure range	0~0.9MPa(0~130psi)							
Proof pressure	1.5MPa(215psi)							
Temperature range	–20~70℃							

① G thread and NPT thread are available.

Ordering code

GA200 08 G

Model

GA200: 200 Series gas-distribution block
GA300: 300 Series gas-distribution block
GA400: 400 Series gas-distribution block
GA600: 600 Series gas-distribution block

Thread type

G: G
T: NPT

Port size

Model	Port size
200 Series	06: 1/8"
	08: 1/4"
300 Series	08: 1/4"
	10: 3/8"
400 Series	10: 3/8"
	15: 1/2"
600 Series	20: 3/4"
	25: 1"

Note: When it is used with F.R.L. combination, extra mounting bracket is need. Please refer to below for order detail.

Dimensions

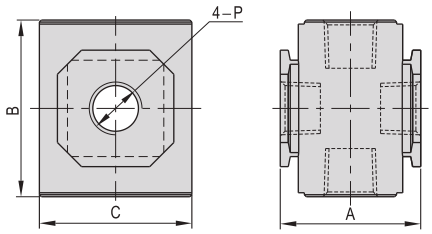

Model\Item		A	B	C	P
GA200	06	28.5	36	30	1/8"
	08	28.5	36	30	1/4"
GA300	08	35	44	38	1/4"
	10	35	44	38	3/8"
GA400	10	42	52	52	3/8"
	15	42	52	52	1/2"
GA600	20	60	76	68	3/4"
	25	60	76	68	1"

Joint accessories——Bracket

How to select the bracket

Bracket name	Code	Photo	Adapt accessories model		
T shape bracket	GA200T–P1		GV200	GZ200	GA200
	GA300T–P1		GV300	GZ300	GA300
	GA400T–P1		GV400	GZ400	GA400
	GA600T–P1		-	–	GA600
L shape bracket	GA200L–P1		GV200	GZ200	GA200
	GA300L–P1		GV300	GZ300	GA300
	GA400L–P1		GV300	GZ400	GA400
	GA600L–P1		–	–	GA600
U shape bracket	GA200U–P1		GV200	GZ200	GA200
	GA300U–P1		GV300	GZ300	GA300
	GA400U–P1		GV400	GZ400	GA400
	GA600U–P1		–	–	GA600

How to use the bracket

Use to joint GV and GC series

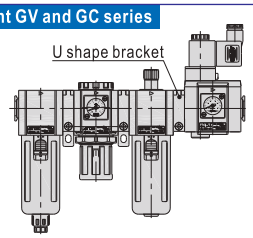

Use to joint GZ and GC series

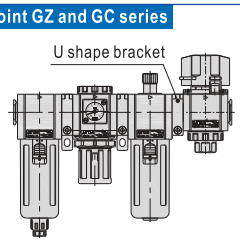

Use to joint GA and GC series

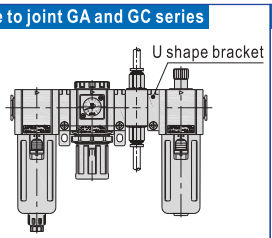

Use to joint GZ GV and GC series

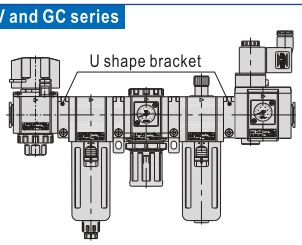

Production's series

Regulator: SR Series 152

Regulator: SDR Series 153

Drip leg drain: ADW Series 155

Pressure gauge: GS, GF, GU Series 156

DPS Series Digital Display Pressure Switch 157

DPC Series No Display Pressure Switch 160

Installation and application

1. Check whether the components have been damaged during transportation before installing and using.
2. Pay attention to whether the flow direction of air (notice "→" direction) and thread type are correct.
3. Please notice whether installation condition accords with technical requirements (such as "working pressure" and "applied temperature range").
4. The medium used or installation environment shall be noticed. The matters with chlorine, carbon compound, aromatic compound and oxidizing acid and alkali shall be avoided to prevent the damage of bowl and oil bowl.
5. Regularly clean or change filter core. Lubricators and regulators shall be in descending order.
6. Keep dust away. The dust cover shall be installed in intake and outlet when the device is dismantled and stored.

SR

Specification

Model	SR200-06	SR200L-06	SR200-08	SR200L-08
Fluid	Air			
Port size ①	1/8"		1/4"	
Pressure range	Standard type:0.05~0.9MPa(7~130psi) ; Lower pressure type:0.03~0.4MPa(4~57psi)			
Max. pressure	1.0MPa(145psi)			
Proof pressure	1.5MPa(215psi)			
Temperature range	–20~70℃			

① G thread and NPT thread are available.

Ordering code

SR 200 08 L □ □ 1 G

Model
SR: Regulator(Mini type)

Series code
200: 200 Series

Port size
06: 1/8"
08: 1/4"

Type code
Blank: Standard
L: Lower pressure

Accessories
Blank: Bracket
J: No bracket

Thread type

Thread type	Scale
G:G	bar
T:NPT	psi

Scale
1: MPa
2: psi
3: bar
4: Double scale(psi、kgf/cm²)

Pressure gauge
Blank: Pressure gauge
N: No pressure gauge

Symbol

Product feature

1. Panel support can be chosen for the installation of regulator with independent use in pipeline.
2. The structure is delicate and compact, which is convenient for installation and application.
3. The performance of pressure adjustment is reliable and steady.
4. In addition to standard type, lower pressure type is optional (The highest adjustable pressure is 0.4 MPa).

Pressure and feature of flow

Pressure chart

Applicable type: SR200–06

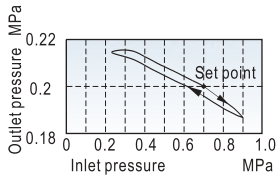

Flow chart

Applicable type: SR200–06
Inlet pressure: 0.7MPa

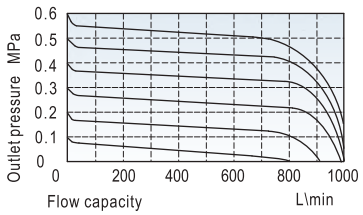

Dimensions

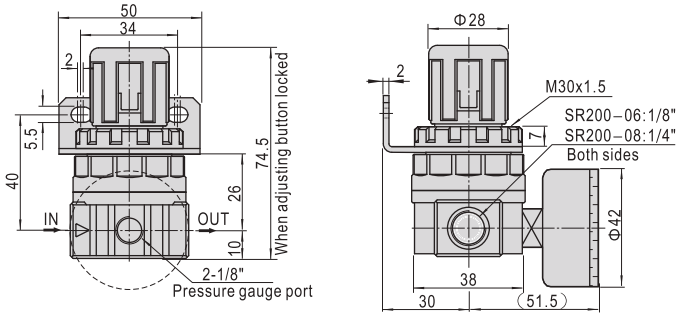

Specification

Model	SDR100-M5	SDR100-06	SDR200-06	SDR200-08	SDR100L-M5	SDR100L-06	SDR200L-06	SDR200L-08
Fluid	Air							
Pressure range	0.05~0.9MPa(7~130psi)				0.03~0.4MPa(4~58psi)			
Max. pressure	1.0MPa(145psi)				0.4MPa(58psi)			
Proof pressure	1.5MPa(215psi)							
Temperature range	-20~70°C							
Port size ①	M5	1/8"		1/4"	M5	1/8"		1/4"

① G thread and NPT thread are available.

Ordering code

SDR 200 08 L □ □ 1 G

Model
SDR: SDR Series Regulator

Series code
100: 100 Series
200: 200 Series

Port size

Model	Port size
100 Series	M5: M5
	06: 1/8"
200 Series	06: 1/8"
	08: 1/4"

Type code
Blank: Standard
L: Lower pressure

Thread type
G: G
T: NPT

Scale
1: MPa
2: psi
3: bar
4: Double scale(psi、kgf/cm²)

Pressure gauge
Blank: Pressure gauge
N: No pressure gauge

Accessories
Blank: Bracket
J: No bracket(standard configuration)

Symbol

Product feature

1. Back pressure structure, compact type, cost-effective, installation time saving.
2. Broad regulating range; low-pressure type is optional other than the standard type; stable output pressure; applicable to situation which has low expectation on output pressure but high expectation on performance and cost-effectiveness.
3. Single unit installation; easy to mount

Inner structure and material of major parts

SDR200

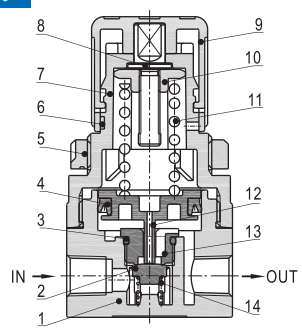

No.	Item	Material
1	Body	Aluminum alloy
2	Needle gasket	NBR
3	O-ring	NBR
4	O-ring	NBR
5	Fixed ring	POM
6	Identification ring	POM
7	Adjusting seat	POM
8	Adjusting pillar	Brass
9	Adjusting button	POM
10	Adjusting nut	Steel
11	Adjusting spring	SWC
12	Piston rode	POM
13	Adjusting seat	POM
14	Return spring	SUS304

Pressure and feature of flow

Pressure chart

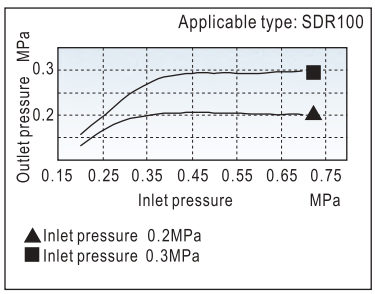

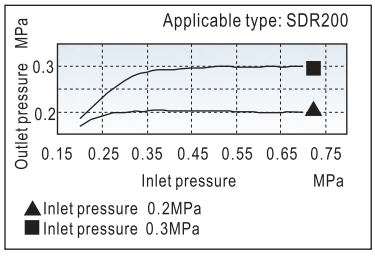

Flow chart

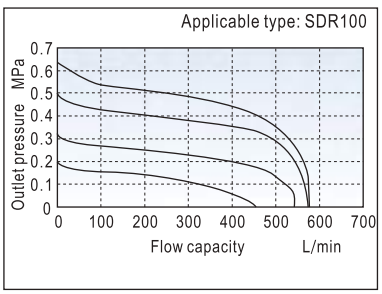

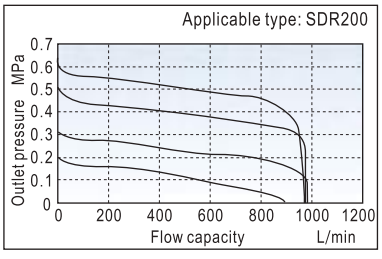

Dimensions

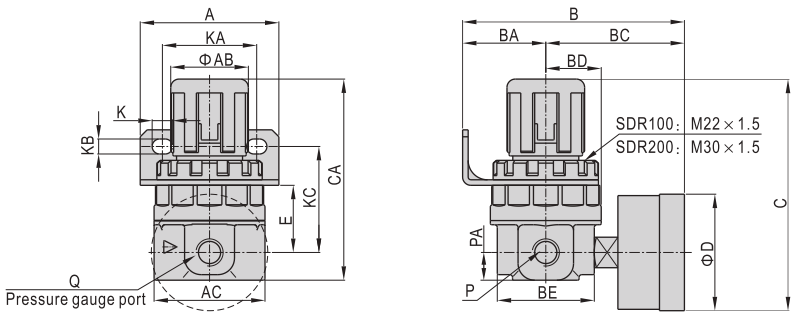

Model\Item	A	AB	AC	B	BA	BC	BD	BE	C	CA	D	E	K	KA	KB	KC	P	PA	Q
SDR100□M5	35	20	32	65.5	26	39.5	14.5	29	62.5	54.5	33	17	7	22	5.5	29	M5	7.5	1/16"
SDR100□06	35	20	32	65.5	26	39.5	14.5	29	62.5	54.5	33	17	7	22	5.5	29	1/8"	7.5	1/16"
SDR200□06	50	28	40	80	30	50	20	35	83.5	72.5	42	24	7.5	34	5.5	38	1/8"	10	1/8"
SDR200□08	50	28	40	80	30	50	20	35	83.5	72.5	42	24	7.5	34	5.5	38	1/4"	10	1/8"

Note: Bracket and pressure gauge are optional.

Attentions of application

Unlock the regulating knob before pressure adjustment, then lock it after the adjustment. Otherwise, may cause the regulating knob damage or the outlet pressure change.

1. Pull the regulating knob to unlock, when the orange marking ring below the regulating knob appears, indicating that the regulating knob is unlocked.
2. Push the regulating knob to lock, when the orange marking ring below the regulating knob disappears completely, indicating that the regulating knob is locked.

ADW Series

Specification

Model	ADW400–10	ADW400–15
Fluid	Air	
Pressure range	0.15~1.0MPa(22~145psi)	
Max. pressure	1.0MPa(145psi)	
Proof pressure	1.5MPa(215psi)	
Temperature range	2~60℃	
Port size ①	In=3/8"	In=1/2"

① G thread and NPT thread are available.

Ordering code

ADW 400 10 G

- **Model**: ADW: Dripleg drain
- **Series code**: 400: 400 Series
- **Port size**: 10: 3/8"; 15: 1/2"
- **Thread type**: G: G; T: NPT

Symbol

Product feature

1. The float is with lever structure. Low position enables more stable drain.
2. The bowl made of High intensity PC and covered by steel case is safer to use.
3. Double strainer guarantees the operation of the drainer.
4. Inlet with large port size prevents accumulation of particles or rust.
5. The drainage bowl with large capacity can keep more rust and dirt than general drains.
6. The drain is equipped with large float and sensitive to control.
7. The bowl with large size can store a certain amount of water which reduces discharging time and extends the service life.

Installation and application

1. ADW400 series are applicable to following air compressing equipments: air storage tank, dryer, filter, and piping.
2. Minimum 300mm room is required if the bottom end of above-mentioned equipments being connected with a (1/2") joint.
3. Using a 1/2" hand lever valve between the air compressing equipment and the inlet of ADW400 is good for maintenance.
4. The air displacement of the air compressing equipment can't be lower than 182 L/min.
5. Make sure the drain is vertical downward and the drain pipe is not bended upside.
6. Do not use acidoid or volatile oil gas (hydrochloric acid, petrol, methylbenzene, etc.) to clean the PC bowl. This may cause break.
7. Push the hexagon nut of the body to release the residual pressure before dissembling the PC bowl and metal protection case to avoid any injury or harm.

Inner structure and material of major parts

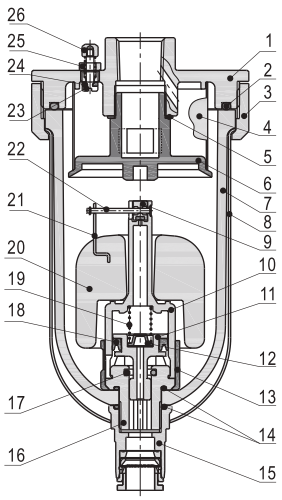

No.	Item	Material
1	Body	Aluminum alloy
2	O-ring	NBR
3	Body nut	Aluminum alloy
4	Filter gauze	Stainless steel
5	Fixed ring	NBR
6	Filter	POM
7	Drain bowl	PC
8	Bowl guard	08F
9	Valve	Stainless steel & & rubber
10	Piston	Aluminum alloy
11	Float	PC+ABS
12	Silencer	Agglomerated by brass grain
13	Filter element	Stainless steel & & rubber
14	O-ring	NBR
15	Drain joint set	
16	Drain baffle	POM
17	O-ring	VITON
18	O-ring	NBR
19	Spring	Spring steel
20	Float	PU rigid foam
21	Link iron	Stainless steel
22	Lever	Stainless steel
23	Adjustable screw	Stainless steel
24	Gasket	EPDM
25	Balance needle seat	Stainless steel
26	Screw	Steel

Dimensions

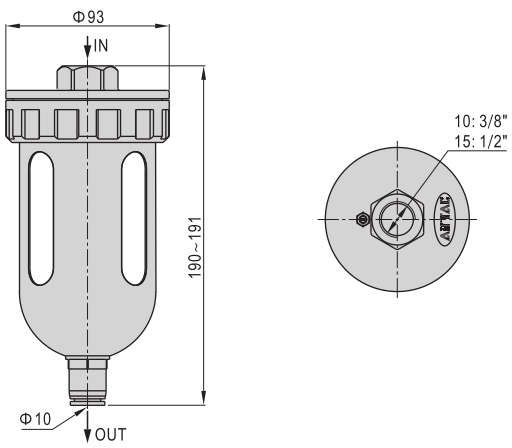

Pressure gauge

Gauge

Specification

Model		GS-40 GF-40 GU-40	GS-50 GF-50 GU-50	GF-60 GU-60
Fluid		Air		
Port size		1/8"	1/4"	1/4"
Temperature range		−20~60℃		
Accuracy grade		2.5		
The pressure range of units and instructions	M	0~1.0MPa(Standard type); 0~0.4MPa(Lower pressure type)		
	B	0~10 bar (Standard type); 0~4 bar (Lower pressure type)		
	P	0~140psi(Standard type); 0~60psi(Lower pressure type)		
	Z	0~10kgf/cm² and 0~140psi(Dual-scale display, Standard type);		
		0~4kgf/cm² and 0~60psi(Dual-scale display, Lower pressure type)		
Material of major parts		Shell: SPCC ; Core: Brass		

Ordering code

F–G S 40 10 M

Model
G: Pressure gause

Mount Type Code
S: Standard Mount
F: Flange Mount
U: Pannel Mount

Dial diameter
30: OD 30mm
40: OD 40mm
50: OD 50mm
60: OD 60mm

Scale and thread type
M: MPa(PT)
P: psi(NPT)
B: bar(G)
Z: Double scale(psi、kgf/cm²)(PT)

Max.pressure scale
02: 0.2MPa(2bar)(30psi)
04: 0.4MPa(4bar)(60psi)
10: 1.0MPa(10bar)(140psi)

Symbol

Product feature

1. It has sensitive reaction and can work under low pressure.
2. The displayed words in the dial are clear and there are several pressure units to be selected.
3. There are several installation ways and installing accessories to be selected.
4. Various dimensions of screw thread are available.

Dimensions

GS Series

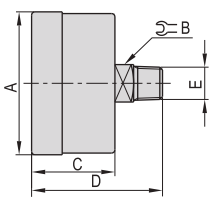

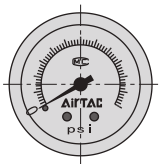

Model	A	B	C	D	E
GS-40	42	11	24.5	38.5	1/8"
GS-50	52	14	26.5	44.5	1/4"

GF Series

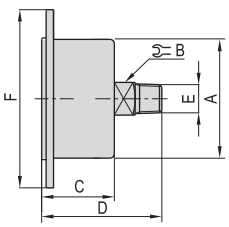

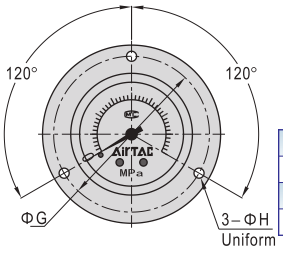

Model	A	B	C	D	E	F	G	H
GF-40	42	11	24.5	40.5	1/8"	60	52.5	3.4
GF-50	52	14	27.5	47.5	1/4"	71	62	4.4
GF-60	62	14	30	50	1/4"	82	71.5	4.4

GU Series

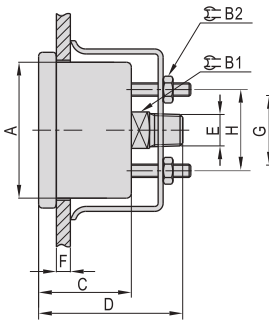

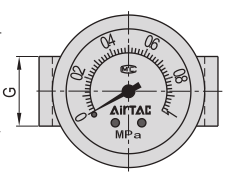

Model	A	B	B1	C	D	E	F(max)	G	H
GU-40	42	11	7	28	43.5	1/8"	5	21	24.5
GU-50	52	14	8	30.5	50	1/4"	7	24	35
GU-60	62	14	8	30.5	50	1/4"	7	25	35

DPS Series digital display pressure switch

Symbol

User interface Instruction

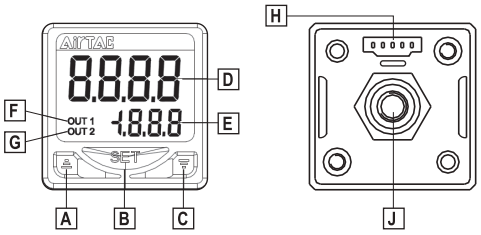

No.	Item
A	Value up button
B	Setting button
C	Value Down button
D	Pressure display area
E	Set pressure display area
F	Output 1 indicator light
G	Output 2 indicator light
H	Power and signal connector
J	Pressure input

Dimensions/Assembly Instruction

Panel mount adapter + Front protective cover

Order the Install accessories (Ordering code: F-DPSEB)

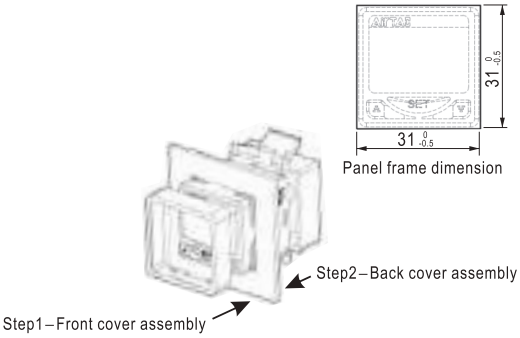

Bracket Order the Install accessories (Ordering code: F-DPSLB)

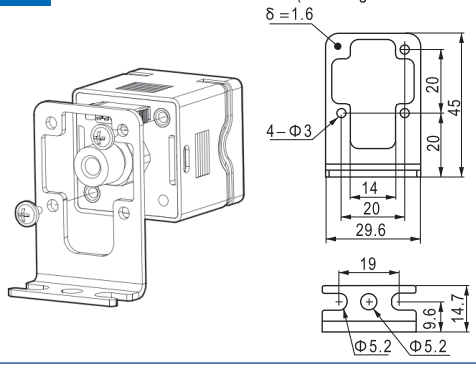

Specification

Input power	Voltage	12~24 VDC ± 10% Ripple(p-p) < 10%
	Current consumption	Under 45mA Max (No load)
Pressure range	Pressure type	Non–corrosive gas
	Measurement range	DPSN1(P1)-01：–100kpa~100kpa
		DPSN1(P1)-10：–100kpa~1,000kpa
	Withstand pressure	DPSN1(P1)-01：200kpa
		DPSN1(P1)-10：1500kpa
	Measurement error	±0.2%F.S. ±1digit(Temperature:25±3℃)
	Repetitive accuracy	±0.2%F.S.
	Temperature error	±3%F.S.(Base 25℃, Range 0 to 50℃)
Display	Type	Double row LCD display,4–digit measurement, 3.5–digit setting
	Output	Double output LCD display
	Color	2–color LCD (Red/Green)
	Display period	100ms、250ms、500ms、1,000ms
Output	Output group	DPSN1:Built–in two sets of NPN output
		DPSP1:Built–in two sets of PNP output
	Transistor output	NPN:Maximum applied voltage 30V/100mA,Retained voltage <1.5V
		PNP:Maximum applied voltage 30V/100mA,Retained voltage <1.5V
	Response time	2ms、20ms、50ms、100ms、250ms、500ms、1,000ms、2,500ms、5,000ms
	Hysteresis	1ms、2ms、3ms、4ms、5ms、6ms、7ms、8ms
	Output mode	Basic mode, Hysteresis mode, Window comparator mode
Pressure Unit		MPa、kPa、kgf/cm^2、bar、psi、mmHg、cmHg(Not available for ±100kPa type)
Vibration resistance		10 to 500Hz with 10mm Amplitude in X, Y, Z directions for 2hrs
Impact resistance		Maximum 100m/s^2 , X, Y, Z directions 3 times each
Operating Temp. range		0~50℃
Stored Temp. range		-20~65℃
Humidity range		35%~80% RH(No condensation)

Ordering code

DPS N1 □ 01 020 G

Model
DPS: Digital Display Pressure Switch

Output type
N1: NPN
P1: PNP

Electrical entry
Space: Plug–in connector
I: Pre–wired type

Piping specifications
G: Male thread G1/8； female thread: M5
T: Male thread NPT1/8； female thread: 10-32UNF
N: Male thread free with M5 female thread

Lead wire length
020: Length 2m
030: Length 3m

Measurement range
01：-100kPa~100kPa
10：–100kPa~1,000kPa

Dimensions

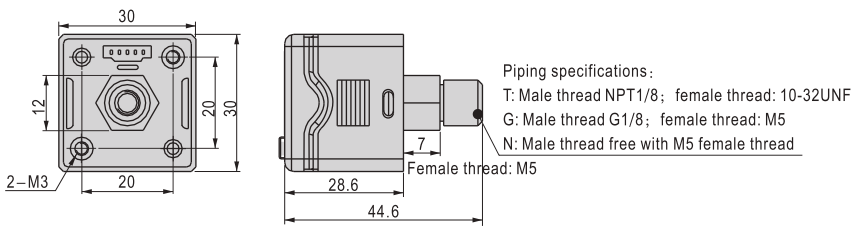

User Interface Instructions

1. Mode switch

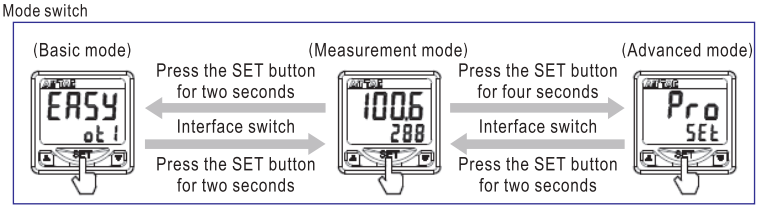

2. Basic mode

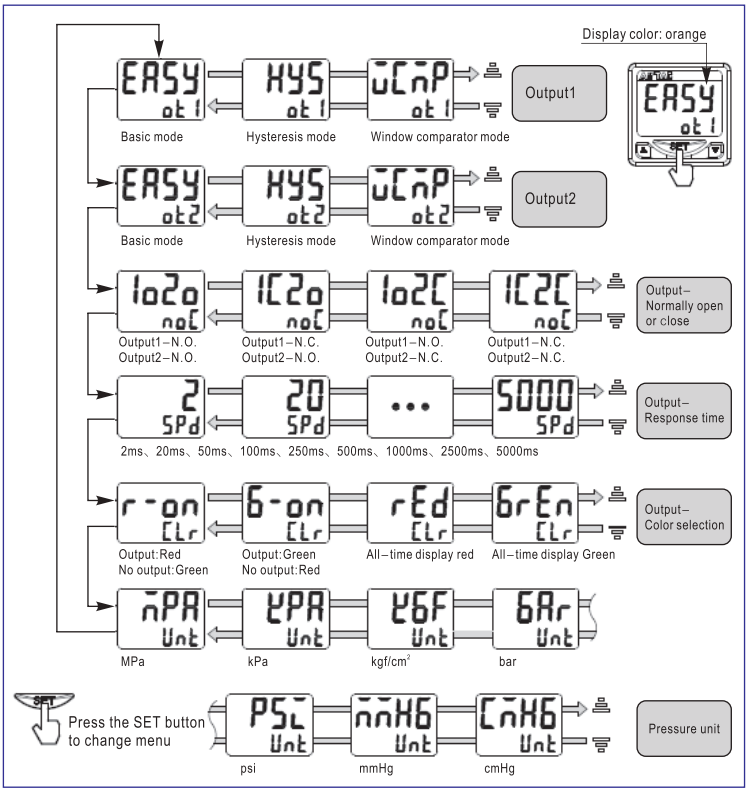

3. Base mode pressure setting

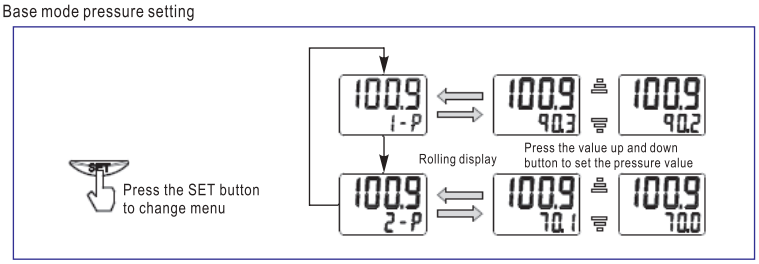

4. Hysteresis /window comparator mode

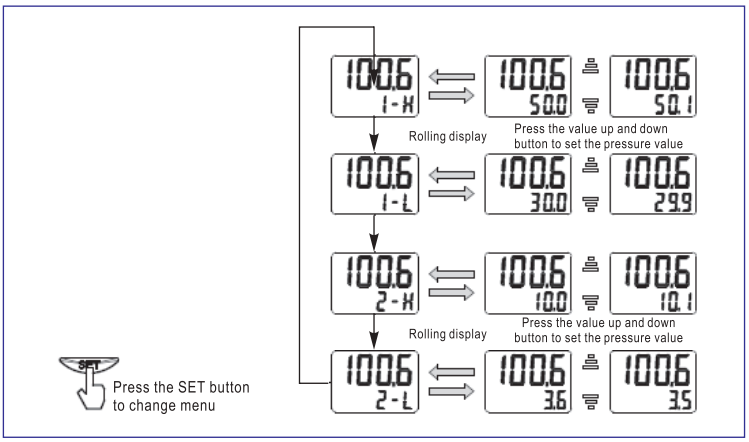

5. Interface of advanced mode

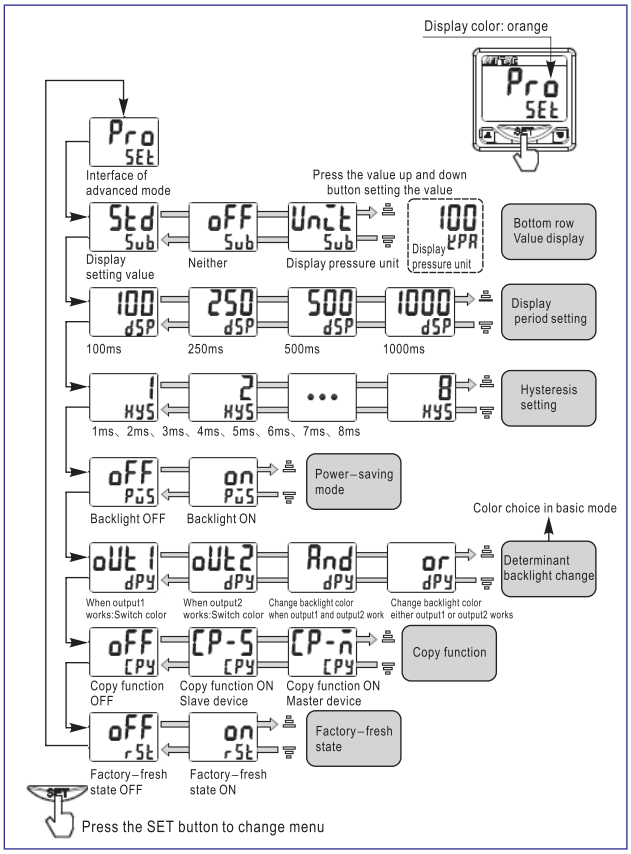

6. Copy function

6.1. Hardware:Connect the second pin of master device with the third pin of slave device, then power on after connecting
6.2. Software:Set "CP—M" on master device. Set "CP—S" on slave device.
6.3. Icon of copy completed Repeat step 1 and 2 if copy failed.
6.4. Turn off the power, disconnected devices and restart it after setting

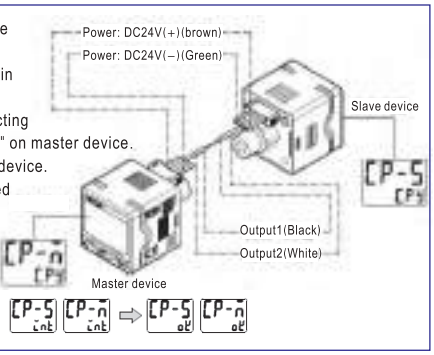

7. Zero—Clear Function

Press up and down simultaneously to reset the display value to zero.

8. Key lock Function

8.1. Press up and the set button simultaneously. Release it when the display turns to "LoCK on"
8.2. Press down and the set button simultaneously. Release it when the display turns to "LoCK oFF".
8.3. Press any button will display "LCK" in lock on mode.

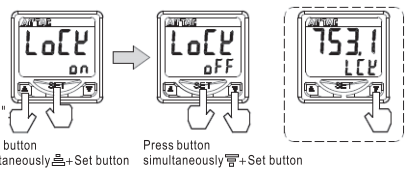

Connection Example

NPN Output

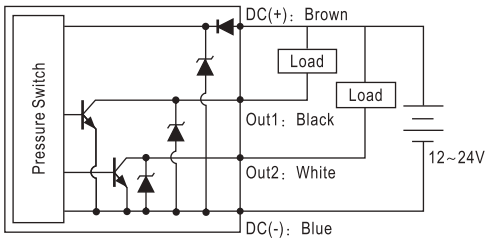

PNP Output

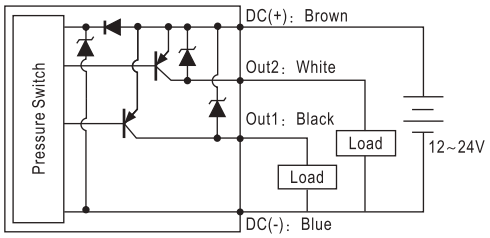

Notes

1. Do not drop、knock or apply excessive impact while handling. Otherwise could cause damage and a malfunction.
2. The tensile strength of the cord is 60N. Applying a greater pulling force on it can cause a malfunction.
3. Do not exceed the screw–in torque of 7N.m when installing piping. Exceeding this value may cause malfunctioning of the sensor.
4. Do not use it with corrosive and/or flammable gases or liquids.
5. Please use it within rated pressure range.
6. Turn off the power before connecting the wires.
7. Don't use in an environment with spattering liquid of oil or solvent.
8. Separate power lines from high voltage lines, avoiding wiring in the same conduit with these lines.

DPC Series minitype no display pressure switch

DPC

Symbol

Product feature

1. Larger measurement range.
2. Single button to finish learning setting.
3. Normally close and normally open can be exchanged.
4. Easy to install.

Specification

Item\Model	DPC	DPCN	DPCP
Voltage	DC12~24V±10%		
Pressure range	DPC□10：−100~1000kPa； DPC□01：−100~100kPa		
Applied fluid	Air、Non−corrosive gas、Incombustibility gas		
Output mode	Two−lines、NPN、PNP、Max.30V-100mA		
Repetitive accuracy	±0.7%F.S		
Temperature accuracy	±2.5%F.S		
Operating Temp. range	0~60℃		
Method of adjusting pressure	Learning button		
Tube O.D.	Φ4mm，Φ6mm，Φ1/4"		
Special function	Two sets model、NO/NC switch		
Protection	IP40		

Ordering code

DPC □− □ □ □

Model
DPC: Minitype no display pressure switch

Output type
Blank: Two-lines
N: NPN
P: PNP

Measurement range
01：-100kPa~100kPa
10：−100kPa~1,000kPa

Tube O.D.
D4：Φ4mm
D6：Φ6mm
08：Φ1/4"

Lead wire length
020: Length 2m
030: Length 3m
050: Length 5m

Dimensions

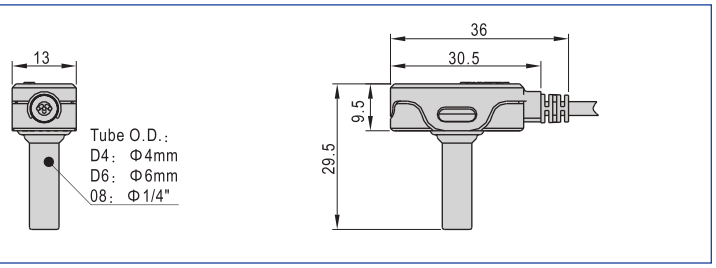

Installation and application

1. Connection Example：

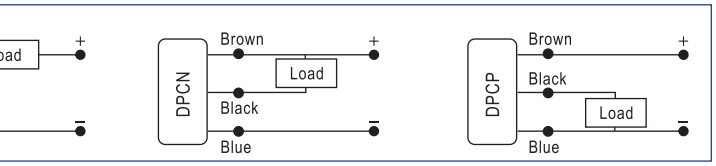

2. Function operation：

2.1. Quick setting： Press the SET button for less then two seconds to finish quick setting.

2.2. Middle valve setting： Press the SET button for two to five seconds to finish setting valve A; Press the SET button again to finish setting valve B.
＊Middle valve=(A+B)/2＊

2.3. N.O./N.C. switch： Press the SET button for six to ten seconds to finish N.O./N.C. switching.

2.4. Lock/Unlock switch： Press the SET button for eleven to twenty seconds to finish Lock/Unlock switching.

2.5. Factory−fresh state： Press the SET button for over twenty seconds to return factory-fresh state.

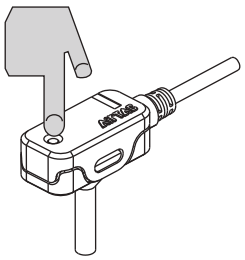

Summary of actuator components

To make system realize the best performance, advanced actuator components are necessary. AirTAC has many types of actuator components for your choice:

1. Standard cylinder series
2. Mini cylinder series
3. Tight cylinder series
4. Compact cylinder series
5. Twin-rod cylinder, multi-rod cylinder, stopper cylinder and other series of the cylinder;

Cylinder

Standard cylinder

SE Series..... 165
SI Series..... 171
SGC Series..... 179

Mini cylinder

MI Series..... 185
PB, PBR Series..... 191

Tight cylinder \Compact cylinder

ACE Series..... 199
ACQ, TACQ Series..... 207

Multi-mounting cylinder, twin rod and tri-rod cylinder

MD, MK Series multi-mounting cylinder..... 221
MU Series Mini Free Mount Cylinder..... 229
MPG Series Plate Cylinder..... 233
MPE Series Threaded Cylinder..... 237
TR Series twin-rod cylinder..... 241
TCL, TCM Series tri-rod cylinder..... 245

Slide table cylinder

STW Series..... 251
HLH Series..... 259
HLQ Series(ball bearing)..... 265
HLS Series(roller bearing)..... 283

Rodless magnetic cylinder

RMS Series..... 301
RMT Series..... 305

Rotary table cylinder

HRQ Series rotary table cylinder..... 311

Air gripper

HFZ, HFP, HFY, HFR, HFC Series air gripper..... 319

Twist clamp cylinder

ACK Series twist clamp cylinder..... 341
QCK Series rotary clamp cylinder..... 345
JCK Series power clamping cylinder..... 349

Boosting Unclamping cylinder\Stopper cylinder\Cylinder accessory

TW Series stopper cylinder..... 367
Cylinder joint accessory..... 377
Sensor switch..... 381

Product selection

1 Confirm the internal diameter of the cylinder

A) Axial load thrust of the cylinder shall be confirmed according to the actual load situation of the required cylinder.

B) Load rate η of the cylinder shall be confirmed according to the action situation of the load.
Load rate has relationship with action speed of the cylinder, which is generally recommended as:
Under static load or low speed: $\eta \leqslant 0.7$
Speed 50~500mm /s: $\eta \leqslant 0.5$
When speed > 500mm /s: $\eta \leqslant 0.3$

C) Working pressure of the cylinder shall be confirmed according to the condition of air supply.

2 Confirm the cylinder stroke

The stroke of the cylinder is pre-selected upon the operation distance of the cylinder and the stroke ratio of transmission mechanism. To facilitate installing and debugging, the calculated stroke shall be with a proper margin. Standard strokes which can guarantee quick supply and low cost shall be selected as possible as you can.

3 Confirm the cylinder type

The variety of the cylinder shall be selected according to the specific requirements of application and installation of the cylinder.

4 Selection of buffer way of the cylinder

There are different buffer devices equipped to the cylinders made by our company. Customer shall choose them according to the action situation of actual load. If both of the load and speed are higher, it is difficult to absorb the impact only by the buffer of the cylinder. Therefore, buffer circuit must be designed or use external buffer to release the impact.

5 Confirm whether the cylinder has magnet.

Whether the cylinder has sensor switch shall be confirmed according to the actual situation and relative inducting switch shall be selected.

6 Selection of installation mode of the cylinder

Installation mode of the cylinder shall be selected according to the application and installation requirements of the cylinder.

7 Selection of connecting mode of piston rod of the cylinder

After the cylinder is pre-selected, it is necessary to check the stability of piston rod (especially the piston rod is thinner, longer and larger) of the cylinder according to different installation modes and the air consumption under actual application condition shall be checked.

Maintenance and Service

Attention

1. There should be no damage in the sliding parts of the cylinder and piston rod to prevent the air leakage caused by poor action of the cylinder and damage of seal parts of piston rod;
2. If the cylinder is not used for a long time, it shall be regularly actuated and shall be coated with oil to prevent rusting;
3. Please read the relevant content in this manual for the requirement of the cylinder to air quality and application condition, pipeline connection and lubrication.

Debugging

Attention

1. Speed control valve shall be installed at the two sides of the cylinder.
   ◆Check valve shall be opened gradually from completely closed state when the cylinder is debugged and the drive speed of the cylinder shall be gradually and slowly adjusted to the required value.
   ◆There are two ways for installing check valve, including exhaust throttle and inlet throttle. Exhaust throttle is mostly adopted in pneumatic system since cylinder will produce back pressure during work through exhaust throttle and make the moving speed or the adjustment of the speed steady and will avoid impact on cylinder cover caused by sudden and quick propulsion of piston rod when starting.
2. When the cylinder with buffer function is debugged, the cushion valve on the cylinder cover shall be adjusted to the state that the cylinder has no rebound from low to high level according to load and speed. What shall be noticed is not to adjust the buffer to dead state in debugging the stroke, otherwise there will be poor buffer or damage of seals caused by piston under high-speed situation.

Installation and Use

1 The axes of piston rod shall accord with the moving direction of load (coaxial). Piston rod and cylinder will produce opposite force which can easily damage the internal surface of the cylinder, guide sleeve, the surface of piston rod and seals.

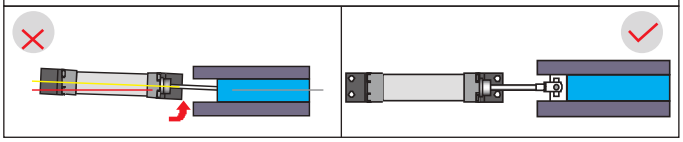

2 Avoid direct connection of piston rod and vertical gravity: add idler wheel to support the rail. Piston rod and cylinder will produce opposite force which can easily bend piston rod and damage the internal surface of the cylinder, guide sleeve, the surface of piston rod and seals.

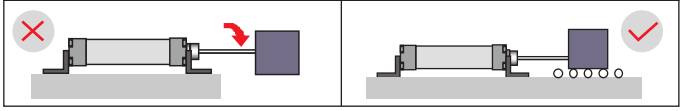

3 If back activity hinge is far from force supply point, piston rod will be influenced by torque force. To prevent that, middle action support shall be used to shorten the distance between support point and force supply point.

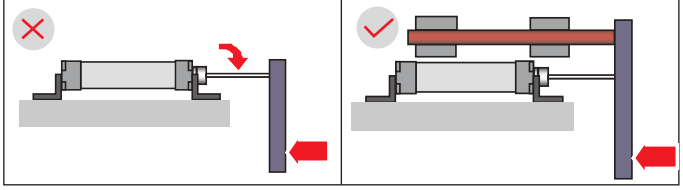

4 To prevent that back activity hinge is far from force supply point, thus the piston rod will be influenced by torque force and change to use middle action support to shorten the long distance between support point and force supply point.

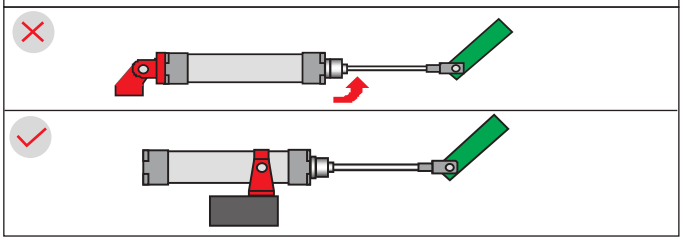

5 Long-stroke cylinder shall set middle guide support to prevent natural droop of piston rod and to prevent the damage on piston rod caused by the droop of piston rod, bend of the cylinder, vibration and external load.

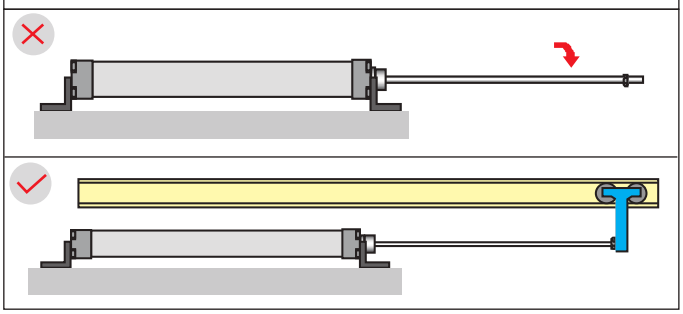

6 It tends to bend in long stroke, thus the installation bracket shall be moved to the front cover

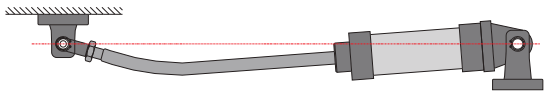

The support bracket shall be moved to the front

7 The fixed cylinder shall not be connected with the rocker carrying out circular action (LB fixation). At this time, it shall be connected with swing cylinder (CA\CB\TC fixation)

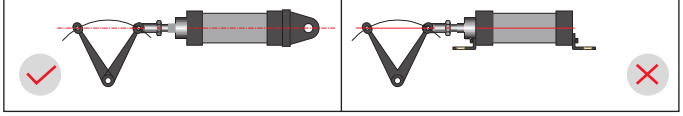

8 If the height (H) between installation surface of bearing bracket and the position of bearing is too great, when cylinder works, the installation part of the support will produce great torque force, which may cause damage to installing bolt and other parts

9 Proper installation shall be adopted considering the direction of load (flange type installation)

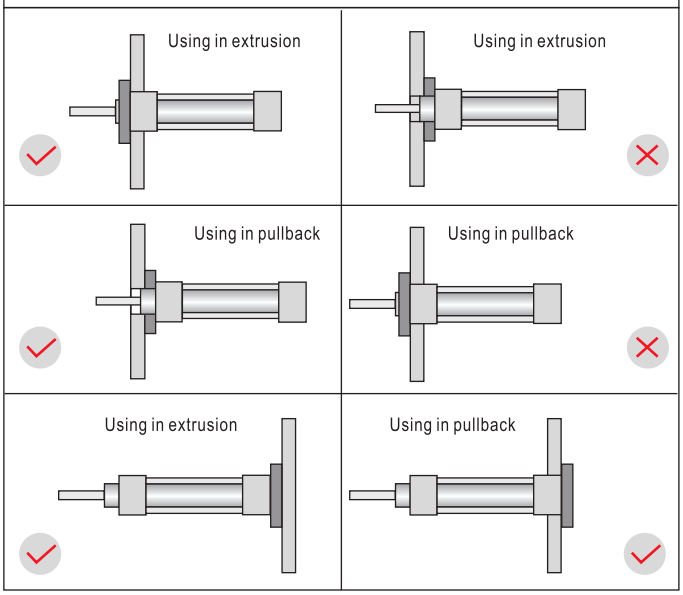

In accordance with ISO15552 and VDMA24562 standard

Product series

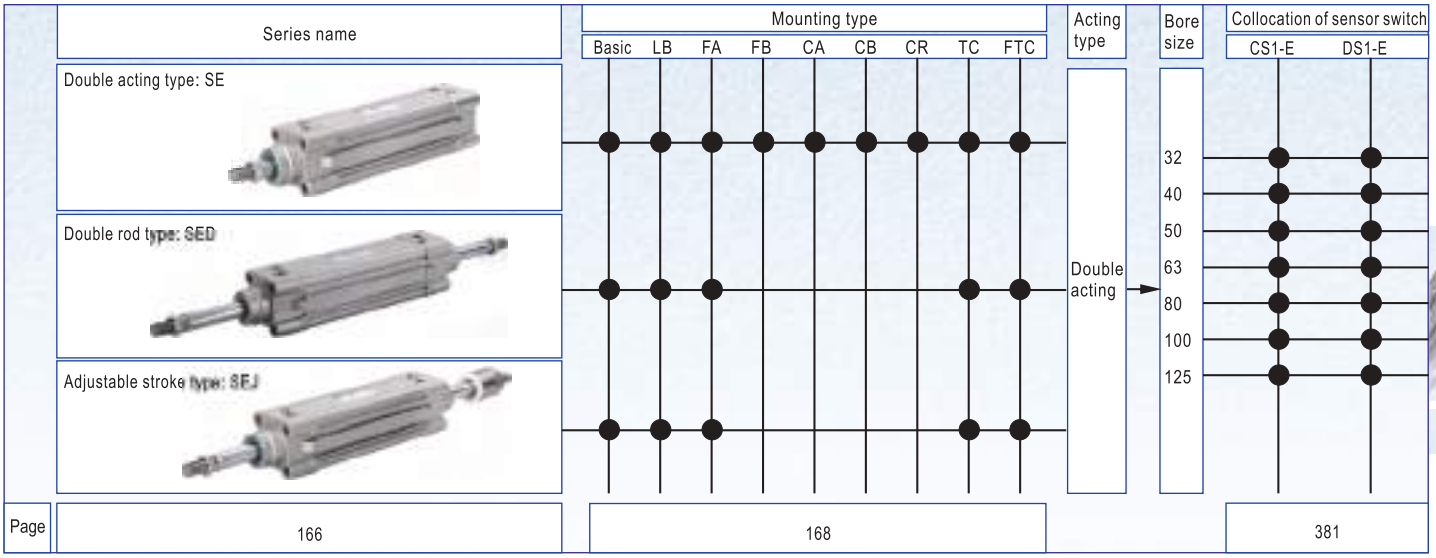

SE

Installation and application

1. When load changes in the work, the cylinder with abundant output capacity shall be selected.
2. Relative cylinder with high temperature resistance or corrosion resistance shall be chosen under the condition of high temperature or corrosion.
3. Necessary protection measure shall be taken in the environment with higher humidity, much dust or water drops, oil dust and welding dregs.
4. Dirty substances in the pipe must be eliminated before cylinder is connected with pipeline to prevent the entrance of particles into the cylinder.
5. The medium used by cylinder shall be filtered to 40 μ m or below.
6. Anti-freezing measure shall be adopted under low temperature environment to prevent moisture freezing.
7. The cylinder shall be carried out test run without load before application. Prior to run, buffer shall be turned to the minimum and gradually released to avoid the damage on cylinder caused by excessive impact.
8. The cylinder shall avoid the influence of side load in operation to maintain the normal work of cylinder and extend the service life.
9. If the cylinder is dismantled and stored for a long time, please conduct anti-rust treatment to the surface. Anti-dust caps shall be added in air inlet and outlet ports.

Criteria for selection: Cylinder thrust

Unit：Newton(N)

Bore size (mm)	Rod size (mm)	Acting type		Pressure area (mm^2)	Operating pressure(MPa)								
					0.1	0.2	0.3	0.4	0.5	0.6	0.7	0.8	0.9
32	12	Double acting	Push side	804	80.4	160.8	241.2	321.6	402.0	482.4	562.8	643.2	723.6
			Pull side	690	69.0	138.0	207.0	276.0	345.0	414.0	483.0	552.0	621.0
40	16	Double acting	Push side	1256	125.6	251.2	376.8	502.4	628.0	753.6	879.2	1002.4	1130.4
			Pull side	1055	105.5	211.0	316.5	422.0	527.5	633.0	738.5	844.0	949.5
50	20	Double acting	Push side	1963	196.3	392.6	588.9	785.2	981.5	1177.8	1374.1	1570.4	1766.7
			Pull side	1649	164.9	329.8	494.7	659.6	824.5	989.4	1154.3	1399.2	1484.1
63	20	Double acting	Push side	3117	311.7	623.4	935.1	1246.8	1558.5	1870.2	2181.9	2493.6	2805.3
			Pull side	2803	280.3	560.6	840.9	1121.2	1401.5	1681.8	1962.1	2242.4	2522.7
80	25	Double acting	Push side	5026	502.6	1005.2	1507.8	2010.4	2513.0	3015.6	3518.2	4020.8	4523.4
			Pull side	4536	453.6	907.2	1360.8	1814.4	2268.0	2721.6	3175.2	3628.8	4082.4
100	25	Double acting	Push side	7853	785.3	1570.6	2355.9	3141.2	3926.5	4711.8	4288.2	6282.4	7067.7
			Pull side	7362	736.2	1472.4	2208.6	2948.6	3681.0	4417.2	5153.4	5889.6	6625.8
125	32	Double acting	Push side	12272	1227.2	2454.4	3681.6	4908.8	6136.0	7363.2	8590.4	9817.6	11044.8
			Pull side	11468	1146.8	2293.6	3440.4	4587.2	5734.0	6880.8	8027.6	9174.4	10321.2

SE

Symbol

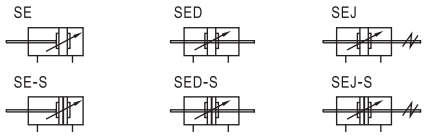

Product feature

1. ISO15552 and VDMA24562 standard cylinder;
2. The piston seal is composed of two Y-shape one-way seal structure, which has compensation function, long service life and low start-up pressure;
3. The square aluminum pipe without tie rod has good corrosion resistance;
4. The buffer adjustment of cylinder is smooth and steady;
5. Cylinders and accessories for installation with several specifications are optional.

Specification

Bore size(mm)		32	40	50	63	80	100	125
Acting type		Double acting						
Fluid		Air(to be filtered by 40 μ m filter element)						
Mounting type	SE	Basic FA FB CA CB CR LB TC FTC TCM1 TCM2						
	SED, SEJ	Basic FA LB TC FTC TCM1 TCM2						
Operating pressure		0.1~1.0MPa(15~145psi)(1.0~10.0bar)						
Proof pressure		1.5MPa(215psi)(15bar)						
Temperature ℃		-20~80						
Speed range mm/s		30~800						30~500
Stroke tolerance		0~250 $^{+1.0}_{0}$	251~1000 $^{+1.5}_{0}$		1001~1500 $^{+2.0}_{0}$			
Cushion type		Variable cushion						
Adjustable cushion stroke mm		27		30		36		40
Port size ①		1/8"	1/4"		3/8"		1/2"	

① G thread and NPT thread are available.
Add) Refer to P381~402 for detail of sensor switch.

Stroke

Bore size (mm)	Standard stroke (mm)	Max. std stroke	Max. stroke
32	25 50 75 80 100 125 150 160 175 200 250 300 350 400 450 500	1000	1800
40	25 50 75 80 100 125 150 160 175 200 250 300 350 400 450 500 600 700 800	1200	1800
50	25 50 75 80 100 125 150 160 175 200 250 300 350 400 450 500 600 700 800 900 1000	1200	1800
63	25 50 75 80 100 125 150 160 175 200 250 300 350 400 450 500 600 700 800 900 1000	1500	1800
80	25 50 75 80 100 125 150 160 175 200 250 300 350 400 450 500 600 700 800 900 1000	1500	1800
100	25 50 75 80 100 125 150 160 175 200 250 300 350 400 450 500 600 700 800 900 1000	1500	1800
125	25 50 75 80 100 125 150 160 175 200 250 300 350 400 450 500 600 700 800 900 1000	1500	1800

Note) Consult us for non–standard stroke.

Ordering code

SE 80 □ x 50 S □ □ G
SED 80 □ x 50 S □ □ G
SEJ 80 □ x 50–20 S □ □ G

Model
- SE: Double acting type
- SED: Double rod type
- SEJ: Adjustable stroke type

Bore size
- 32 40 50 63 80 100 125

Rod Material
- Blank: Medium carbon steel
- A: SUS420J2
- B: SUS304
- C: SUS316

Stroke
- Refer to stroke table for details

Adjustable stroke
- 10: 10mm
- 20: 20mm
- 30: 30mm
- 40: 40mm
- 50: 50mm
- 75: 75mm
- 100: 100mm

Magnet
- Blank: Without magnet
- S: With magnet

Thread type
- G: G
- T: NPT

Seals Material
- Blank: TPU
- H: Viton
- N: NBR

Mounting type ①

	Mounting type	Available series	Memo
Blank		SE SED SEJ	
LB			
FA			
FB		SE	
CA			
CB			
CR			Be used with CB
FTC		SE SED SEJ	Be used with TCM1 TCM2
TC			

① Please refer to page 168~170 for accessory parts.

Inner structure and material of major parts

SE

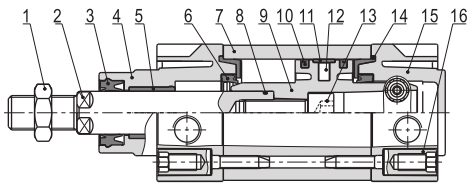

NO.	Item	Material
1	Rod nut	Carbon steel\Stainless steel
2	Piston rod	Carbon steel with 20 μ m chrome plated or Stainless steel
3	Front cover packing	TPU
4	Front cover	Aluminum alloy
5	Bushing	Wear resistant material
6	Cushing O-ring	TPU
7	Barrel	Aluminum alloy
8	O-ring	NBR
9	Piston	Aluminum alloy
10	Piston Seal	TPU
11	Wear ring	Wear resistant material
12	Magnet	Plastic\Rubber(Φ125)
13	Bolt	Carbon steel
14	Buffer gasket	TPU
15	Back cover	Aluminum alloy
16	Screw	Carbon steel\Stainless steel

Dimensions

SE

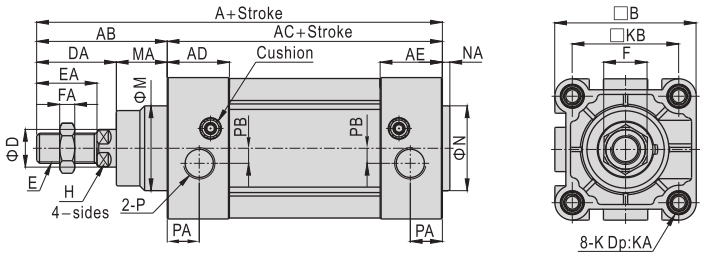

Bore size\Item	A	AB	AC	AD	AE	B	D	DA	E	EA
32	142	48	94	27.5	27.5	46.5	12	29	M10×1.25	22
40	159	54	105	32	32	54	16	33	M12×1.25	24
50	175	69	106	31	31	64	20	42	M16×1.5	32
63	190	69	121	33	33	75	20	42	M16×1.5	32
80	214	86	128	33	33	93	25	53	M20×1.5	40
100	229	91	138	37	37	110	25	55	M20×1.5	40
125	279	119	160	46	46	134	32	74	M27×2.0	54

Bore size\Item	F	FA	H	K	KA	KB	M	MA	N	NA	P	PA	PB
32	17	6	10	M6	16	32.5	30	19	30	3	1/8"	13.5	6
40	17	7	13	M6	16	38	35	21	35	3.5	1/4"	17.5	6
50	23	8	17	M8	16	46.5	40	27	40	3.5	1/4"	14	8
63	23	8	17	M8	16	56.5	45	27	45	4	3/8"	17	8
80	26	10	22	M10	17	72	45	33	45	4	3/8"	16.5	8
100	26	10	22	M10	17	89	55	36	55	4	1/2"	19.5	10
125	41	13.5	27	M12	20	110	60	45	60	4	1/2"	23	11

Remark: The dimensions of magnet type cylinder are the same as non-magnet type cylinder.

SED

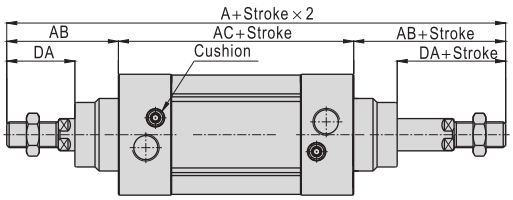

SEJ

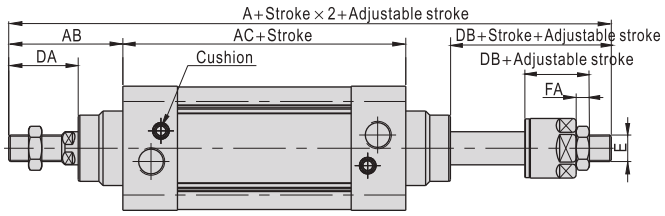

Bore size\Item	A		AB	AC	DA	DB	E	FA
Model	SED	SEJ						
32	190	188	48	94	29	27	M10X1.25	6
40	213	208	54	105	33	28	M12X1.25	7
50	244	231	69	106	42	29	M16X1.5	8
63	259	246	69	121	42	29	M16X1.5	8
80	300	282.5	86	128	53	35.5	M20X1.5	10
100	320	300.5	91	138	55	35.5	M20X1.5	10
125	398	366.5	119	160	74	42.5	M27X2.0	13.5

Remark:
1. The dimensions of magnet type cylinder are the same as non-magnet type cylinder.
2. The unmarked dimension is the same as SE standard type.

Accessories

Ordering code

F-SE 50 CA

- Accessory
- Model
- Bore size
- Accessory type ①

Mounting accessory	
	CA: CA type
	CB: CB type ②
	TC: TC type

① The listed accessories are for SE cylinder. Accessories that are adaptable to other cylinders are not shown. Please refer to accessory list on P170 for selection and ordering information.

② CB is attached with relevant PIN.

Accessory selection

Cylinder model / Accessories		SE		SED		SEJ	
		Standard	With magnet	Standard	With magnet	Standard	With magnet
Mounting accessory	LB	●	●	●	●	●	●
	FA	●	●	●	●	●	●
	FB	●	●	×	×	×	×
	CA	●	●	×	×	×	×
	CB	●	●	×	×	×	×
	CR	●	●	×	×	×	×
	TC	●	●	●	●	●	●
	FTC	●	●	●	●	●	●
	TCM1	●	●	●	●	●	●
	TCM2	●	●	●	●	●	●
Knuckle ①	I	●	●	●	●	●	●
	Y	●	●	●	●	●	●
	U	●	●	●	●	●	●
	F	●	●	●	●	●	●
Sensor switch ②	CS1-E	×	●	×	●	×	●
	CS1-EX	×	●	×	●	×	●
	DS1-E	×	●	×	●	×	●
	DS1-EN	×	●	×	●	×	●
	DS1-EP	×	●	×	●	×	●

① Please refer to P377~380 for knuckle detail,

② Please refer to P381~402 for detail of sensor switch.

Material of accessories

Accessories / Bore size	Mounting accessories									Knuckle			
	LB	FA	FB	CA	CB	CR	FTC	TCM1	TCM2	I	Y	F	U
32~100	○	●	●	◇	◇	◇	■	■	●	□	□	□	□
125	■	■	■	■	■	■	■	■	■	□	□	□	□

●——Aluminum alloy, ▲——S45C, ■——Cast steel,
○——Low carbon steel, ◇——Nodular cast iron, □——Carbon steel.

Dimensions

LB

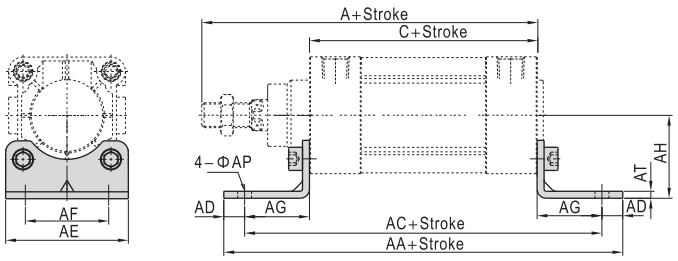

Bore size\Item	A	C	AA	AC	AD	AE	AF	AG	AH	AP	AT
32	142	94	158	142	8	47	32	24	32	7	3
40	159	105	179	161	9	53	36	28	36	9	3
50	175	106	190	170	10	65	45	32	45	9	3
63	190	121	209	185	12	75	50	32	50	9	3
80	214	128	248	210	19	95	63	41	63	12.5	4
100	229	138	266	228	19	115	75	45	71	14.5	4
125	279	160	290	250	20	140	90	45	90	16.5	8

FA\FB

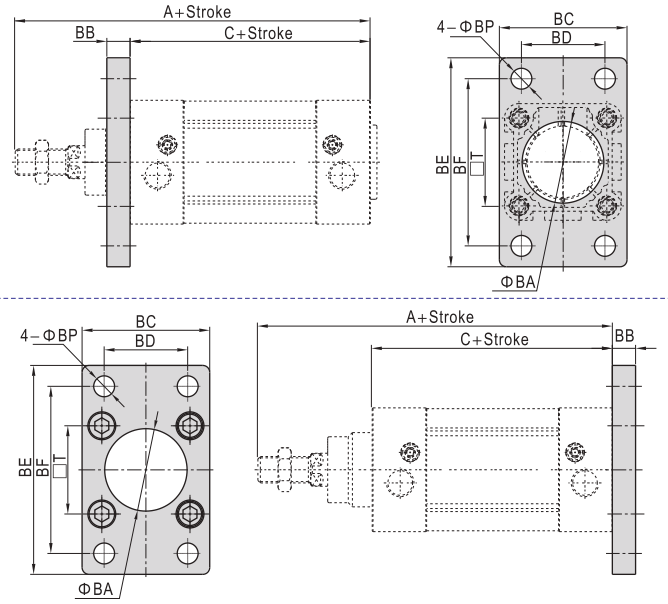

Bore size\Item	A	C	BA	BB	BC	BD	BE	BF	BP	T
32	142	94	30.5	10	47	32	80	64	7	32.5
40	159	105	35.5	10	53	36	90	72	9	38
50	175	106	40.5	12	65	45	108	90	9	46.5
63	190	121	45.5	12	75	50	118	100	9	56.5
80	214	128	45.5	16	95	63	150	126	12.5	72
100	229	138	55.5	16	115	75	176	150	14.5	89
125	279	160	60.5	20	139	90	218	180	16.5	110

CA

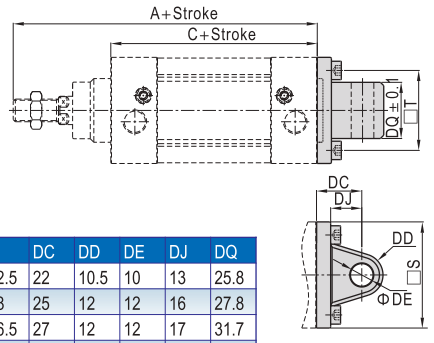

Bore size\Item	A	C	S	T	DC	DD	DE	DJ	DQ
32	142	94	46.5	32.5	22	10.5	10	13	25.8
40	159	105	54	38	25	12	12	16	27.8
50	175	106	64	46.5	27	12	12	17	31.7
63	190	121	75	56.5	32	15	16	22	39.7
80	214	128	93	72	36	15.5	16	22	49.7
100	229	138	110	89	41	20	20	27	59.7
125	279	160	134	110	50	24	25	33	69.7

CB

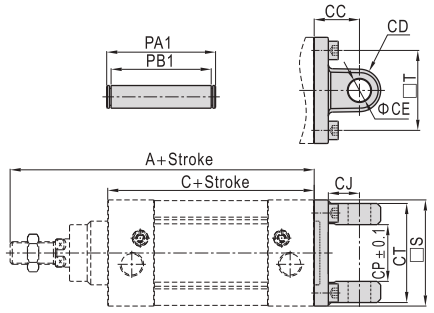

Bore size\Item	A	C	CC	CD	CE	CJ	CP	CT	PA1	PB1	S	T
32	142	94	22	10.5	10	13	26	45	51	45.5	46.5	32.5
40	159	105	25	12	12	16	28	52	59	52.5	54	38
50	175	106	27	12	12	17	32	60	67	60.5	64	46.5
63	190	121	32	15	16	22	40	70	77	70.5	75	56.5
80	214	128	36	15.5	16	22	50	90	97	90.5	93	72
100	229	138	41	20	20	27	60	110	119	110.5	110	89
125	279	160	50	24	25	33	70	130	139	130.5	134	110

CR

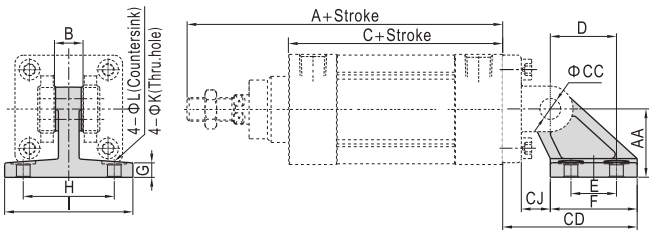

Bore size\Item	A	AA	B	C	CC	CD	CJ	D	E	F	G	H	I	K	L
32	142	32	26	94	10	50	10	21	18	31	8	38	51	6.6	-
40	159	36	28	105	12	56	12	24	22	35	10	41	54	6.6	-
50	175	45	32	106	12	68	13	33	30	45	12	50	65	9	-
63	190	50	40	121	16	77	17	37	35	50	12	52	67	9	-
80	214	63	50	128	16	93	19	47	40	60	14	66	86	11	18
100	229	71	60	138	20	106	22	55	50	70	15	76	96	11	18
125	279	90	70	160	25	135	26	70	60	90	20	94	124	14	20

Note) CR can't be used alone, it must be used with CB.

FTC

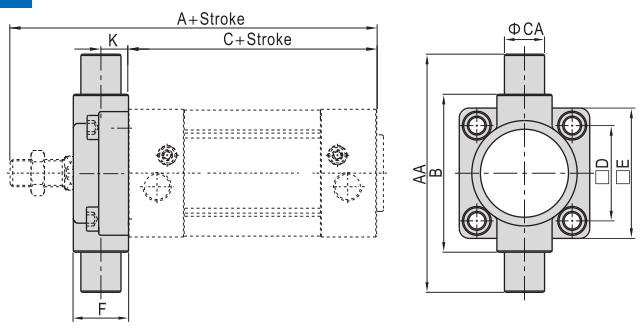

Bore size\Item	A	C	AA	B	CA	D	E	F	K
32	142	94	74	50	12	32.5	46	19	10
40	159	105	95	63	16	38	52	21	10
50	175	106	107	75	16	46.5	64	26	12
63	190	121	130	90	20	56.5	74	28	12
80	214	128	150	110	20	72	94	31	16
100	229	138	182	132	25	89	114	35	16
125	279	160	210	160	25	110	139	43	20

TCM1

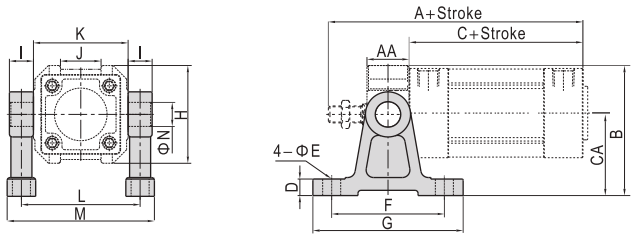

Bore size\Item	A	C	AA	B	CA	D	E	F	G	H	I	J	K	L	M	N
32	142	94	19	66	40	11	9	60	80	52	12	20	50	62	77	12
40	159	105	21	86.5	54	11	12	75	100	65	16	27	63	79	98	16
50	175	106	26	91.5	54	11	12	75	100	75	16	31	75	91	110	16
63	190	121	28	115	70	11	12	85	110	90	20	42	90	110	133	20
80	214	128	31	126	70	11	12	85	110	112	20	54	110	130	153	20
100	229	138	35	157.5	90	19	18	115	155	135	25	68	135	157	185	25
125	279	160	43	169.3	90	19	18	115	155	170	25	80	160	185	213	25

Note) The installation position of the accessories can not be adjusted arbitrarily.

TCM2

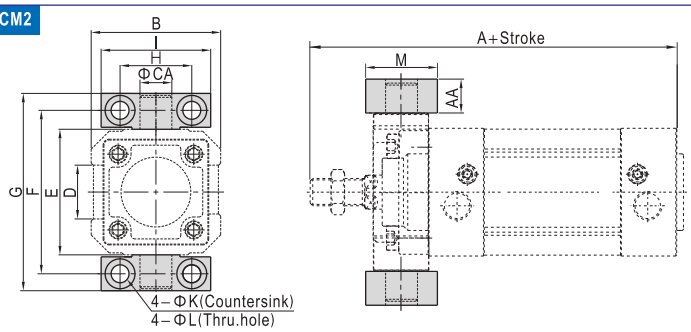

Bore size\Item	A	AA	B	CA	D	E	F	G	H	I	K	L	M
32	142	14	52	12	20	50	66	80	32	46	11	7	30
40	159	17	65	16	27	63	82	99	36	55	15	9	36
50	175	17	75	16	31	75	94	111	36	55	15	9	36
63	190	20.5	90	20	42	90	113.5	134	42	65	18	11	40
80	214	20.5	112	20	54	110	133.5	154	42	65	18	11	40
100	229	24.5	135	25	68	132	159.5	184	50	75	20	14	50
125	279	24.5	170	25	80	160	187.5	212	50	75	20	14	50

Note) The installation position of the accessories can not be adjusted arbitrarily.

TC

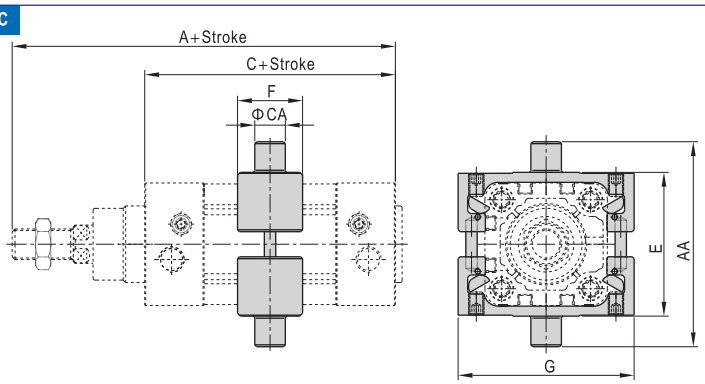

Bore size\Item	A	AA	C	CA	E	F	G
32	142	74	94	12	52	31	68
40	159	95	105	16	63	33	78
50	175	107	106	16	75	35	95
63	190	130	121	20	90	37	108
80	214	150	128	20	110	41	130
100	229	182	138	25	132	47	148
125	279	210	160	25	160	51	173

List for ordering code of accessories

Accessories / Bore size	Mounting accessory			
	LB	FA	FB	CA
32	F-SI32LB	F-SI32FA		F-SE32CA
40	F-SI40LB	F-SI40FA		F-SE40CA
50	F-SI50LB	F-SI50FA		F-SE50CA
63	F-SI63LB	F-SI63FA		F-SE63CA
80	F-SI80LB	F-SI80FA		F-SE80CA
100	F-SI100LB	F-SI100FA		F-SE100CA
125	F-SI125LB	F-SI125FA		F-SE125CA

Accessories / Bore size	Mounting accessory		
	CB	CR	TC ①
32	F-SE32CB	F-SI32CR	F-SE32TC
40	F-SE40CB	F-SI40CR	F-SE40TC
50	F-SE50CB	F-SI50CR	F-SE50TC
63	F-SE63CB	F-SI63CR	F-SE63TC
80	F-SE80CB	F-SI80CR	F-SE80TC
100	F-SE100CB	F-SI100CR	F-SE100TC
125	F-SE125CB	F-SI125CR	F-SE125TC

Accessories / Bore size	Mounting accessory		
	FTC	TCM1	TCM2
32	F-SI32FTC	F-SI32TCM1	F-SI32TCM2
40	F-SI40FTC	F-SI40TCM1	F-SI40TCM2
50	F-SI50FTC	F-SI40TCM1	F-SI40TCM2
63	F-SI63FTC	F-SI63TCM1	F-SI63TCM2
80	F-SI80FTC	F-SI63TCM1	F-SI63TCM2
100	F-SI100FTC	F-SI125TCM1	F-SI125TCM2
125	F-SI125FTC	F-SI125TCM1	F-SI125TCM2

Accessories / Bore size	Knuckle			
	I: I Knuckle	Y: Y Knuckle	F: F Knuckle	U: U Knuckle
32	F-M10X125I	F-M10X125Y	F-M10X125F	F-M10X125U
40	F-M12X125I	F-M12X125Y	F-M12X125F	F-M12X125U
50	F-M16X150I	F-M16X150Y	F-M16X150F	F-M16X150U
63	F-M16X150I	F-M16X150Y	F-M16X150F	F-M16X150U
80	F-M20X150I	F-M20X150Y	F-M20X150F	F-M20X150U
100	F-M20X150I	F-M20X150Y	F-M20X150F	F-M20X150U
125	F-M27X200I	F-M27X200Y	-	F-M27X200U

Accessories / Bore size	Sensor switch				
	CS1–E	CS1–EX	DS1–E	DS1–EN	DS1–EP
32~125	CS1–E	CS1–EX	DS1–E	DS1–EN	DS1–EP

How to mount TC bracket

The process of mounting

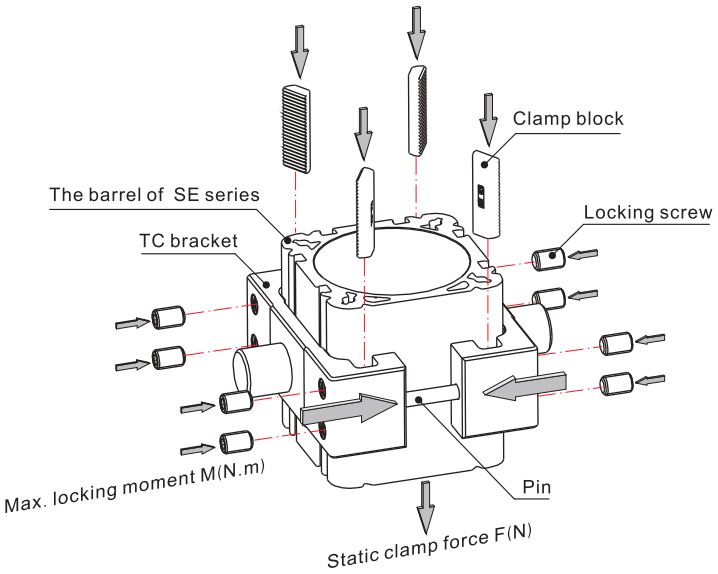

The accomplished of mounting

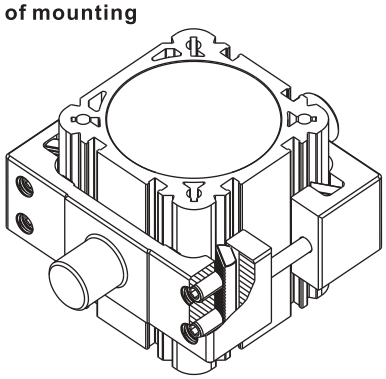

Please install TC bracket by below steps:

① Hitched half of TC bracket over the barrel, and adjust it to the adapted position.

② Insert the both sides pin of the TC bracket.

③ Aimed another half of TC bracket's pin hole at pin and hitched another half of TC bracket over the barrel.

④ Posting clamp block in the four nook of TC bracket by upper picture.

⑤ Screw down eight locked screws from side face of TC bracket, and lock TC bracket with the max. locking moment of below table. the static clamp force(F) as below table:

Bore size	Max. locking moment M(N.m)	Static clamp force F(N)
32	3	800
40	6	1200
50	6	2000
63	12	3000
80	20	5000
100	20	8000
125	30	12000

In accordance with ISO15552 standard

Product series

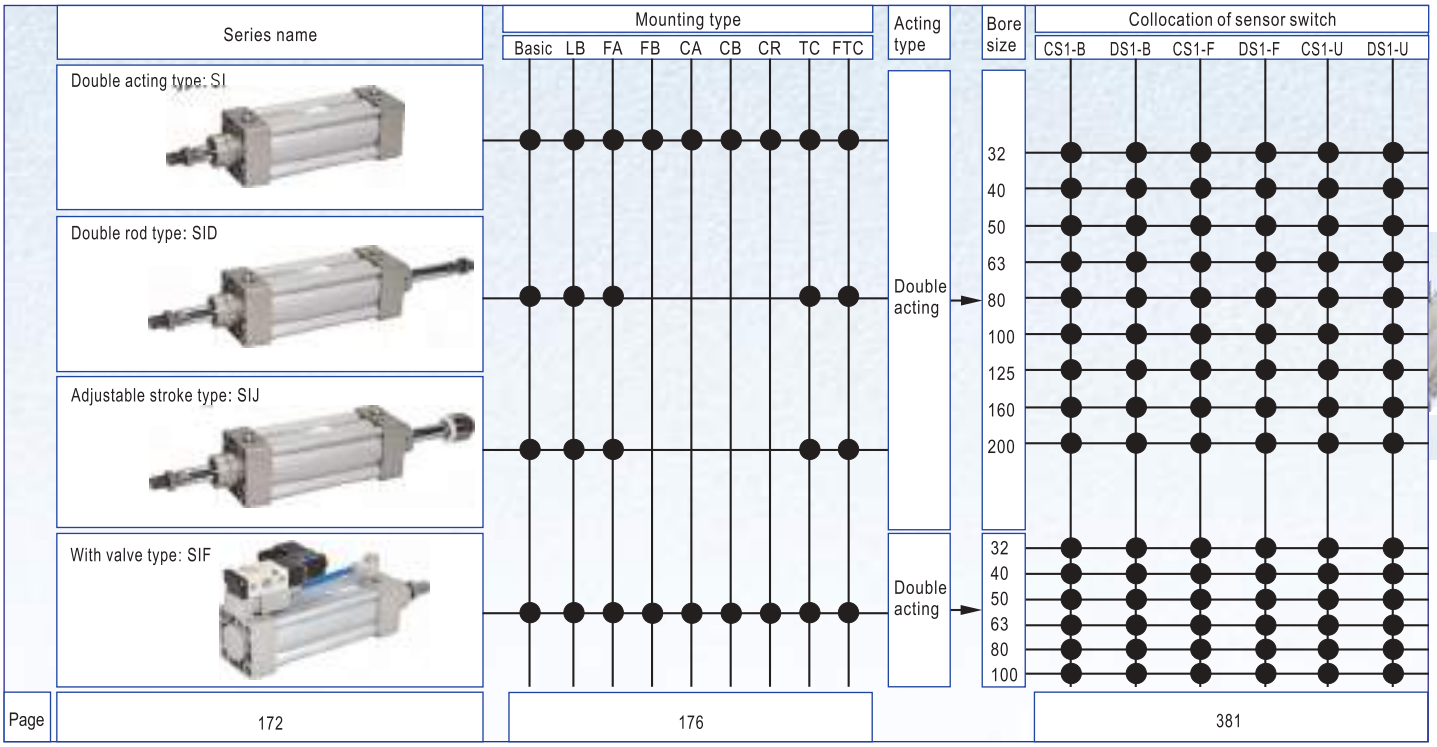

SI

Installation and application

1. When load changes in the work, the cylinder with abundant output capacity shall be selected.
2. Relative cylinder with high temperature resistance or corrosion resistance shall be chosen under the condition of high temperature or corrosion.
3. Necessary protection measure shall be taken in the environment with higher humidity, much dust or water drops, oil dust and welding dregs.
4. Dirty substances in the pipe must be eliminated before cylinder is connected with pipeline to prevent the entrance of particles into the cylinder.
5. The medium used by cylinder shall be filtered to 40 μ m or below.
6. Anti-freezing measure shall be adopted under low temperature environment to prevent moisture freezing.
7. The cylinder shall be carried out test run without load before application. Prior to run, buffer shall be turned to the minimum and gradually released to avoid the damage on cylinder caused by excessive impact.
8. The cylinder shall avoid the influence of side load in operation to maintain the normal work of cylinder and extend the service life.
9. If the cylinder is dismantled and stored for a long time, please conduct anti-rust treatment to the surface. Anti-dust caps shall be added in air inlet and outlet ports.

Criteria for selection: Cylinder thrust

Unit：Newton(N)

Bore size (mm)	Rod size (mm)	Acting type		Pressure area (mm^2)	Operating pressure(MPa)								
					0.1	0.2	0.3	0.4	0.5	0.6	0.7	0.8	0.9
32	12	Double acting	Push side	804	80.4	160.8	241.2	321.6	402.0	482.4	562.8	643.2	723.6
			Pull side	690	69.0	138.0	207.0	276.0	345.0	414.0	483.0	552.0	621.0
40	16	Double acting	Push side	1256	125.6	251.2	376.8	502.4	628.0	753.6	879.2	1002.4	1130.4
			Pull side	1055	105.5	211.0	316.5	422.0	527.5	633.0	738.5	844.0	949.5
50	20	Double acting	Push side	1963	196.3	392.6	588.9	785.2	981.5	1177.8	1374.1	1570.4	1766.7
			Pull side	1649	164.9	329.8	494.7	659.6	824.5	989.4	1154.3	1399.2	1484.1
63	20	Double acting	Push side	3117	311.7	623.4	935.1	1246.8	1558.5	1870.2	2181.9	2493.6	2805.3
			Pull side	2803	280.3	560.6	840.9	1121.2	1401.5	1681.8	1962.1	2242.4	2522.7
80	25	Double acting	Push side	5026	502.6	1005.2	1507.8	2010.4	2513.0	3015.6	3518.2	4020.8	4523.4
			Pull side	4536	453.6	907.2	1360.8	1814.4	2268.0	2721.6	3175.2	3628.8	4082.4
100	25	Double acting	Push side	7853	785.3	1570.6	2355.9	3141.2	3926.5	4711.8	4288.2	6282.4	7067.7
			Pull side	7362	736.2	1472.4	2208.6	2948.6	3681.0	4417.2	5153.4	5889.6	6625.8
125	32	Double acting	Push side	12272	1227.2	2454.4	3681.6	4908.8	6136.0	7363.2	8590.4	9817.6	11044.8
			Pull side	11468	1146.8	2293.6	3440.4	4587.2	5734.0	6880.8	8027.6	9174.4	10321.2
160	40	Double acting	Push side	20106	2010.6	4021.2	6031.8	8042.4	10053.0	12063.6	14074.2	16084.8	18095.4
			Pull side	18849	1884.9	3769.8	5654.7	7539.6	9424.5	11309.4	13194.3	15079.2	16964.1
200	40	Double acting	Push side	31416	3141.6	6283.2	9424.8	12566.4	15708.0	18849.6	21991.2	25132.8	28274.4
			Pull side	30157	3015.7	6031.4	9047.1	12062.8	15078.5	18094.2	21109.9	24125.6	27141.3

ISO15552 Standard cylinder

SI Series

SI

Symbol

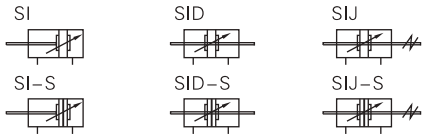

Product feature

1. ISO15552 (original ISO6431) standard cylinder;
2. The piston seal is composed of two Y-shape one-way seal structure, which has compensation function, long service life and low start-up pressure;
3. The ✳–shaped aluminum pipe without tie rod has good corrosion esistance;
4. The buffer adjustment of cylinder is smooth and steady;
5. Cylinders and accessories for installation with several specifications are optional.

Specification

Bore size(mm)		32	40	50	63	80	100	125	160	200
Acting type		Double acting								
Fluid		Air(to be filtered by 40 μ m filter element)								
Mounting type	SI	Basic FA FB CA CB CR LB TC FTC TCM1 TCM2								
	SID、SIJ	Basic FA LB TC FTC TCM1 TCM2								
Operating pressure		0.1~1.0MPa(15~145psi)(1.0~10.0bar)								
Proof pressure		1.5MPa(215psi)(15bar)								
Temperature ℃		-20~80								
Speed range mm/s		30~800						30~500		
Stroke tolerance		$0\sim250^{+1.0}_{0}$ $251\sim1000^{+1.5}_{0}$ $1001\sim1500^{+2.0}_{0}$								
Cushion type		Variable cushion								
Adjustable cushion stroke mm		27		30		36		40	50	
Port size ①		1/8"	1/4"		3/8"		1/2"		3/4"	

① G thread and NPT thread are available.
Add) Refer to P381~402 for detail of sensor switch.

Stroke

Bore size (mm)	Standard stroke (mm)	Max. std stroke	Max. stroke
32	25 50 75 80 100 125 150 160 175 200 250 300 350 400 450 500	1000	1800
40	25 50 75 80 100 125 150 160 175 200 250 300 350 400 450 500 600 700 800	1200	1800
50	25 50 75 80 100 125 150 160 175 200 250 300 350 400 450 500 600 700 800 900 1000	1200	1800
63	25 50 75 80 100 125 150 160 175 200 250 300 350 400 450 500 600 700 800 900 1000	1500	1800
80	25 50 75 80 100 125 150 160 175 200 250 300 350 400 450 500 600 700 800 900 1000	1500	1800
100	25 50 75 80 100 125 150 160 175 200 250 300 350 400 450 500 600 700 800 900 1000	1500	1800
125	25 50 75 80 100 125 150 160 175 200 250 300 350 400 450 500 600 700 800 900 1000	1500	1800
160	25 50 75 80 100 125 150 160 175 200 250 300 350 400 450 500 600 700 800 900 1000	1500	2000
200	25 50 75 80 100 125 150 160 175 200 250 300 350 400 450 500 600 700 800 900 1000	1500	2000

Note) Consult us for non–standard stroke.

Ordering code

SI 160 □ × 50 S □ □ G

SID 160 □ × 50 S □ □ G

SIJ 160 □ × 50–20 S □ □ G

Model
- SI: Double acting type
- SID: Double rod type
- SIJ: Adjustable stroke type

Bore size
32 40 50 63 80 100 125 160 200

Rod Material
- Blank: Medium carbon steel
- A: SUS420J2
- B: SUS304

Stroke
Refer to stroke table for details

Adjustable stroke
- 10: 10mm
- 20: 20mm
- 30: 30mm
- 40: 40mm
- 50: 50mm
- 75: 75mm
- 100: 100mm

Magnet
- Blank: Without magnet
- S: With magnet

Thread type
- G: G
- T: NPT

Seals Material
- Blank: TPU
- H: Viton
- N: NBR

Mounting type ①

	Mounting type	Available series	Memo
Blank		SI SID SIJ	
LB			
FA			
FB		SI	
CA			
CB			
CR			Be used with CB
FTC		SI SID SIJ	Be used with TCM1 TCM2
TC			

① Please refer to page 176~178 for accessory parts.

Inner structure and material of major parts

SI

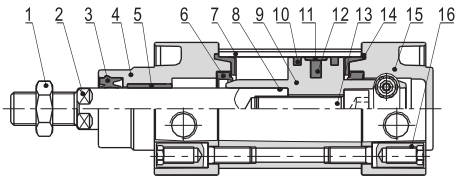

NO.	Item	Material
1	Rod nut	Carbon steel
2	Piston rod	Carbon steel with 20 μ m chrome plated or Stainless steel
3	Front cover packing	TPU
4	Front cover	Aluminum alloy
5	Bushing	Wear resistant material
6	Cushing O-ring	TPU
7	Barrel	Aluminum alloy
8	Rod O-ring	NBR
9	Piston	Aluminum alloy
10	Piston seal	TPU
11	Wear ring	Wear resistant material
12	Magnet	Plastic(Φ100 or below)\Rubber(other)
13	Bolt	Carbon steel
14	Buffer gasket	TPU
15	Back cover	Aluminum alloy
16	Tie-rod nut	Carbon steel

Dimensions

SI

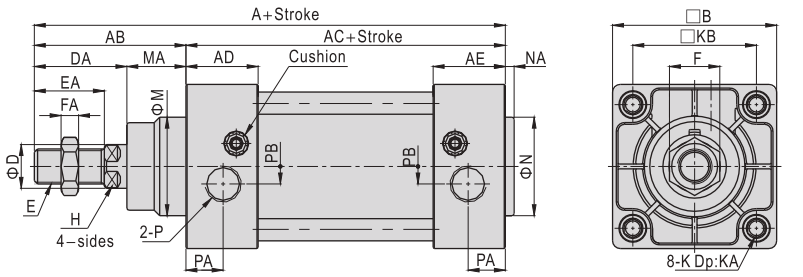

Bore size\Item	A	AB	AC	AD	AE	B	D	DA	E	EA	F	FA	M	MA
32	142	48	94	27.5	27.5	47	12	29	M10×1.25	22	17	6	30	19
40	159	54	105	32	32	53	16	33	M12×1.25	24	17	7	35	21
50	175	69	106	31	31	65	20	42	M16×1.5	32	23	8	40	27
63	190	69	121	33	33	75	20	42	M16×1.5	32	23	8	45	27
80	214	86	128	33	33	95	25	53	M20×1.5	40	26	10	45	33
100	229	91	138	37	37	115	25	55	M20×1.5	40	26	10	55	36
125	279	119	160	46	46	140	32	74	M27×2.0	54	41	13.5	60	45
160	332	152	180	50	50	180	40	94	M36×2.0	72	55	18	65	58
200	347	167	180	50	50	220	40	100	M36×2.0	72	55	18	75	67

Bore size\Item	H	K(Without TC)	K(With TC)	KA(Without TC)	KA(With TC)	KB	N	NA	P	PA	PB
32	10	M6	M5	16	14	32.5	30	3	1/8"	13	5.5
40	13	M6	M5	16	16	38	35	3.5	1/4"	17	6
50	17	M8	M6	16	16	46.5	40	3.5	1/4"	15.5	7.5
63	17	M8	M6	16	16	56.5	45	4	3/8"	16.5	7.5
80	22	M10	M8	17	16	72	45	4	3/8"	16.5	9
100	22	M10	M8	17	16	89	55	4	1/2"	18.5	9.5
125	27	M12	M12	20	20	110	60	4	1/2"	23	14
160	36	M16	M16	24	24	140	65	4	3/4"	25	15
200	36	M16	M16	24	24	175	75	5	3/4"	25	15

Remark: The dimensions of magnet type cylinder are the same as non-magnet type cylinder.

SID

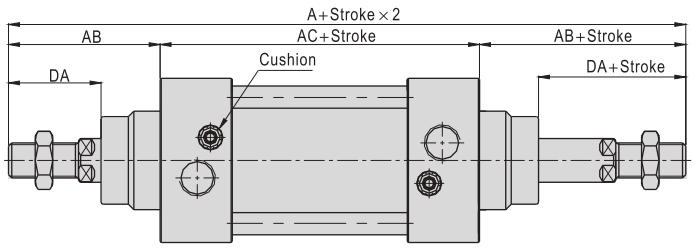

SIJ

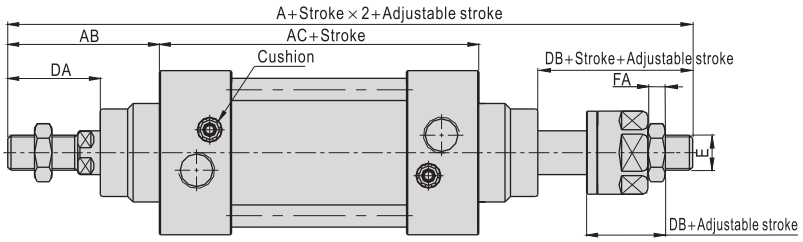

Bore size\Item	A		AB	AC	DA	DB	E	FA
Model	SID	SIJ						
32	190	188	48	94	29	27	M10X1.25	6
40	213	208	54	105	33	28	M12X1.25	7
50	244	231	69	106	42	29	M16X1.5	8
63	259	246	69	121	42	29	M16X1.5	8
80	300	282.5	86	128	53	35.5	M20X1.5	10
100	320	300.5	91	138	55	35.5	M20X1.5	10
125	398	366.5	119	160	74	42.5	M27X2.0	13.5
160	484	458	152	180	94	68	M36X2.0	18
200	514	482	167	180	100	68	M36X2.0	18

Remark:

1. The dimensions of magnet type cylinder are the same as non-magnet type cylinder.
2. The unmarked dimension is the same as SI standard type.

Symbol

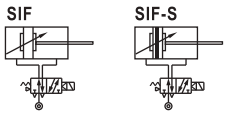

Product feature

1.For Standard Cylinders: use 4M210 valve for bore size 32,40 & 50; 4M310 valve for bore size 63,80 & 100mm;
2.Individually control, no need for extra solenoid valves;
3.Installation time & space saving; suitable for decentralise installation in large system.
4.Options of mounting accessories & easy installation.

Stroke

Bore size(mm)		Standard stroke (mm)	Mini. stroke	Max. std stroke	Max. stroke
32	Standard type	50 75 80 100 125 150 160 175 200 250 300 350 400 450 500	50	1000	1800
	With TC type	100 125 150 160 175 200 250 300 350 400 450 500	100		
40	Standard type	50 75 80 100 125 150 160 175 200 250 300 350 400 450 500 600 700 800	50	1200	1800
	With TC type	100 125 150 160 175 200 250 300 350 400 450 500 600 700 800	100		
50	Standard type	50 75 80 100 125 150 160 175 200 250 300 350 400 450 500 600 700 800 900 1000	50	1200	1800
	With TC type	100 125 150 160 175 200 250 300 350 400 450 500 600 700 800 900 1000	100		
63 80 100	Standard type	50 75 80 100 125 150 160 175 200 250 300 350 400 450 500 600 700 800 900 1000	50	1500	1800
	With TC type	100 125 150 160 175 200 250 300 350 400 450 500 600 700 800 900 1000	100		

Note) Consult us for non–standard stroke.

Specification

Cylinder specification						
Bore size(mm)	32	40	50	63	80	100
Acting type	Double acting					
Fluid	Air(to be filtered by 40 μ m filter element)					
Mounting type	Basic FA FB CA CB CR LB TC FTC TCM1 TCM2					
Operating pressure	0.1~1.0MPa(15~145psi)(1.0~10.0bar)					
Proof pressure	1.5MPa(215psi)(15bar)					
Temperature ℃	-20~80					
Speed range mm/s	30~800					
Stroke tolerance	$0\sim250^{+1.0}_{0}$ $251\sim1000^{+1.5}_{0}$ $1001\sim1500^{+2.0}_{0}$					
Cushion type	Variable cushion					
Adjustable cushionstroke	27		30		36	
Port size	1/8"	1/4"		3/8"		1/2"
PU tube size(ODXID)	Φ8 × Φ5				Φ10 × Φ6.5	
Solenoid valve specification						
Model	4M210-06 & 4M210-08			4M310-08 & 4M310-10		
Fluid	Air(to be filtered by 40 μ m filter element)					
Acting type	Internal piloted					
Port size ①	In=Exhaust=1/8" & In=1/4" Exhaust=1/8"			In=Exhaust=1/4" & In=PT3/8 Exhaust=1/4"		
Orifice size	4M210-06: 14.0mm²(Cv=0.78) 4M210-08: 16.0mm²(Cv=0.89)			4M310-08: 25.0mm²(Cv=1.40) 4M310-10: 30.0mm²(Cv=1.68)		
Valve type	5 port 2 position					
Operating pressure	0.15~0.8MPa(21~114psi)					
Proof pressure	1.5MPa(215psi)					
Temperature ℃	-20~70					
Body material	Aluminum alloy					
Lubrication ②	Not required					
Max. frequency ③	5 cycle/sec			4 cycle/sec		
Coil specification						
Standard voltage	AC220V、AC110V、AC24V、DC24V、DC12V					
Scope voltage	AC: ±15% DC: ±10%					
Power consumption	AC: 3.5VA DC: 3.0W					
Protection	IP65(DIN40050)					
Temperature classification	B Class					
Electrical entry	Terminal, Grommet					
Activating time	0.05 sec and below					

① G thread and NPT thread are available.
② It cann't stop in the midway of lubricating. Lubricants like ISO VG32 or equivalent are recommended.
③ The maximum actuation frequency is in the no-load state.
Add) Refer to P381~402 for detail of sensor switch.

Ordering code

SIF 50 × 1000 S □–06 A □ G

- **Model**: SIF: Double acting with valve type
- **Bore size**: 32 40 50 63 80 100
- **Stroke**: Refer to stroke table for details
- **Magnet**: Blank: Without magnet; S: With magnet
- ① **Mounting type**

Mounting type	Available series	Memo
Blank: Standard type	SIF	
LB: LB type		
FA: FA type		
FB: FB type		
CA: CA type		
CB: CB type		
CR: CR type		Be used with CB
FTC: FTC type		Be used with TCM1 TCM2
TC: TC type		

- **Port size**: 06: 1/8"; 08: 1/4"; 10: 3/8"
- **Voltage**: A: AC220V; B: DC24V; C: AC110V; E: AC24V; F: DC12V
- **Electrical entry**: Blank: Terminal; I: Grommet
- **Thread type**: G: G; T: NPT

① Please refer to page 176~178 for accessory parts.

Main combination

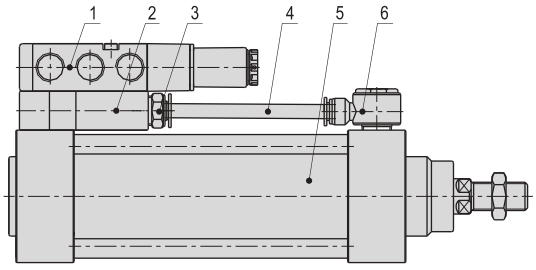

NO.	Item
1	4M series solenoid valve
2	Unite block
3	APC series tube connector
4	PU tube
5	SI series cylinder
6	APH series tube connector

How to use

1.Options for piston rod to retract or extend when solenoid coil is energized.
2.Default factory setting will be piston rod to retract when energized (see Drawing one).Should you require piston rod to extend when energized, reposition the solenoid valves as shown in Drawing two.

Drawing one

Pull when energized

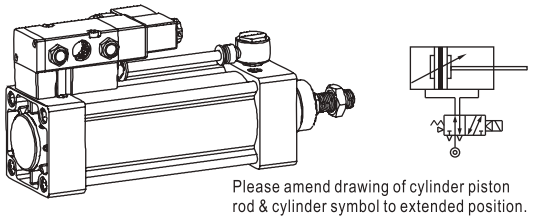

Please amend drawing of cylinder piston rod & cylinder symbol to extended position.

Drawing two

Push when energized

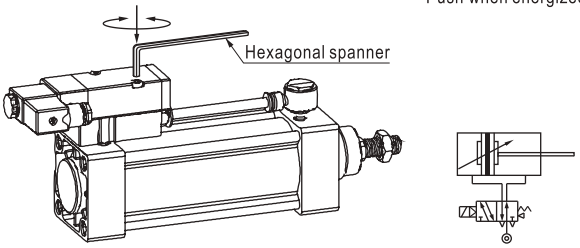

Attention Ensure that the seals between the mounting block & valve are placed correctly when repositioning the valve.

Dimensions

Pull when electrify

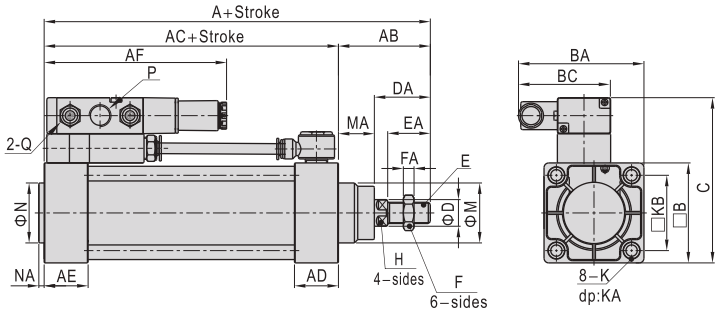

Push when electrify

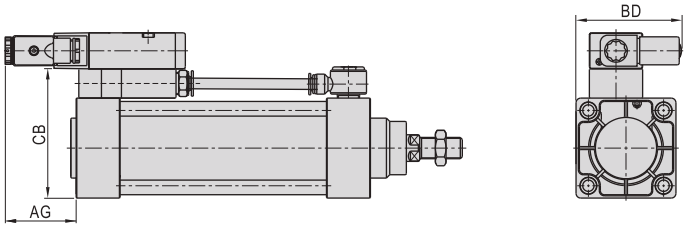

Bore size\Item	A	AB	AC	AD	AE	AF	AG	B	BA	BC	BD	C	CB
32	142	48	94	27.5	27.5	117.5	53.5	47	78.5	67	67.5	91	69
40	159	54	105	32	32	120	51	53	82	67	70	97	75
50	175	69	106	31	31	118.5	52.5	65	89.5	67	74.5	109	87
63	190	69	121	33	33	137	53	75	94.5	69.5	79.5	124	97
80	214	86	128	33	33	137	53	95	105.5	69.5	88	144	117
100	229	91	138	37	37	137.5	52.5	115	118	69.5	96	164	137

Bore size\Item	D	DA	E	EA	F	FA	H	M	MA	N	NA
32	12	29	M10X1.25	22	17	6	10	30	19	30	3
40	16	33	M12X1.25	24	17	7	13	35	21	35	3.5
50	20	42	M16X1.5	32	23	8	17	40	27	40	3.5
63	20	42	M16X1.5	32	23	8	17	45	27	45	4
80	25	53	M20X1.5	40	26	10	22	45	33	45	4
100	25	55	M20X1.5	40	26	10	22	55	36	55	4

Bore size\Item	Compatible valve's type	P	Q	K(No TC)	K(With TC)	KA(No TC)	KA(With TC)	KB
32	4M210-06	1/8"	1/8"	M6	M5	16	14	32.5
	4M210-08	1/4"						
40	4M210-06	1/8"	1/8"	M6	M5	16	16	38
	4M210-08	1/4"						
50	4M210-06	1/8"	1/8"	M8	M6	16	16	46.5
	4M210-08	1/4"						
63	4M310-08	1/4"	1/4"	M8	M6	16	16	56.5
	4M310-10	3/8"						
80	4M310-08	1/4"	1/4"	M10	M8	17	16	72
	4M310-10	3/8"						
100	4M310-08	1/4"	1/4"	M10	M8	17	16	89
	4M310-10	3/8"						

Remark: The dimensions of magnet type cylinder are the same as non-magnet type cylinder.

SIF

Accessories

Ordering code

F-SI 50 FA

- Accessory
- Model
- Bore size
- Accessory type ①

Mounting accessory	LB: LB type
	FA: FA type
	FB: FB type
	CA: CA type
	CB: CB type ②
	CR: CR type
	TC: TC type
	FTC: FTC type
	TCM1: TCM1 type
	TCM2: TCM2 type

① Please refer to accessory list on P178 for selection and ordering information.
② CB is attached with relevant PIN.

SI

Accessory selection

Cylinder model / Accessories		SI\SIF		SID		SIJ	
		Standard	With magnet	Standard	With magnet	Standard	With magnet
Mounting accessory	LB	●	●	●	●	●	●
	FA	●	●	●	●	●	●
	FB	●	●	×	×	×	×
	CA	●	●	×	×	×	×
	CB	●	●	×	×	×	×
	CR	●	●	×	×	×	×
	TC	●	●	●	●	●	●
	FTC	●	●	●	●	●	●
	TCM1	●	●	●	●	●	●
	TCM2	●	●	●	●	●	●
Knuckle ①	I	●	●	●	●	●	●
	Y	●	●	●	●	●	●
	U	●	●	●	●	●	●
	F	●	●	●	●	●	●
Sensor switch ②	CS1-B	×	●	×	●	×	●
	DS1-B	×	●	×	●	×	●
	CS1-F	×	●	×	●	×	●
	DS1-F	×	●	×	●	×	●
	CS1-U	×	●	×	●	×	●
	DS1-U	×	●	×	●	×	●

① Please refer to P377~380 for knuckle detail,
② Please refer to P381~402 for detail of sensor switch.

Material of accessories

Accessories / Bore size	Mounting accessories									Knuckle			
	LB	FA	FB	CA	CB	CR	FTC	TCM1	TCM2	I	Y	F	U
32~100	○	●	●	◇	◇	◇	■	■	●	□	□	□	□
125~200	□	□	□	□	□	□	□	□	●	□	□	□	□

●——Aluminum alloy, ■——Cast steel,
○——Low carbon steel, ◇——Nodular cast iron, □——Carbon steel.

Dimensions

LB

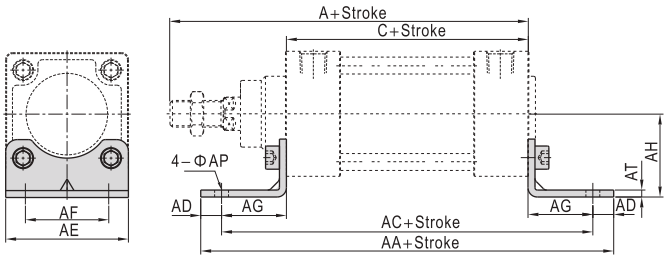

Bore size\Item	A	C	AA	AC	AD	AE	AF	AG	AH	AP	AT
32	142	94	158	142	8	47	32	24	32	7	3
40	159	105	179	161	9	53	36	28	36	9	3
50	175	106	190	170	10	65	45	32	45	9	3
63	190	121	209	185	12	75	50	32	50	9	3
80	214	128	248	210	19	95	63	41	63	12.5	4
100	229	138	266	220	19	115	75	41	71	14.5	4
125	279	160	290	250	20	140	90	45	90	16.5	8
160	332	180	340	300	20	180	115	60	115	18.5	8
200	347	180	380	320	30	220	135	70	135	24	9

FA\FB

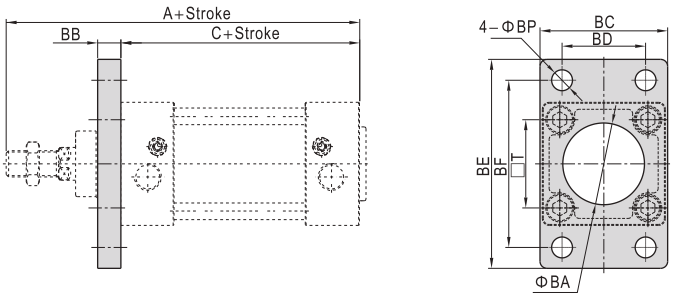

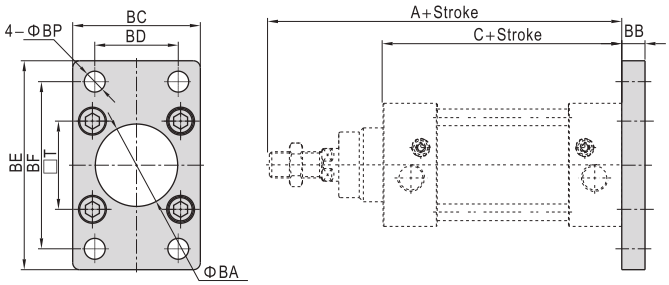

Bore size\Item	A	C	BA	BB	BC	BD	BE	BF	BP	T
32	142	94	30.5	10	47	32	80	64	7	32.5
40	159	105	35.5	10	53	36	90	72	9	38
50	175	106	40.5	12	65	45	108	90	9	46.5
63	190	121	45.5	12	75	50	118	100	9	56.5
80	214	128	45.5	16	95	63	150	126	12.5	72
100	229	138	55.5	16	115	75	176	150	14.5	89
125	279	160	60.5	20	139	90	218	180	16.5	110
160	332	180	65.5	20	180	115	280	230	18.5	140
200	347	180	75.5	25	220	135	320	270	24	175

CA

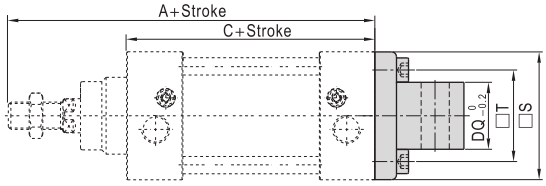

Bore size\Item	A	C	S	T	DC	DD	DE	DJ	DQ
32	142	94	47	32.5	22	9	10	13	25.8
40	159	105	52	38	25	10.5	12	16	27.8
50	175	106	64	46.5	27	11	12	17	31.7
63	190	121	74	56.5	32	13.5	16	22	39.7
80	214	128	94	72	36	14.5	16	22	49.7
100	229	138	113	89	41	17	20	27	59.7
125	279	160	139	110	50	22	25	33	69.7
160	332	180	180	140	55	30	30	35.5	89.7
200	347	180	220	175	60	30	30	37	89.7

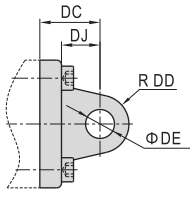

CB

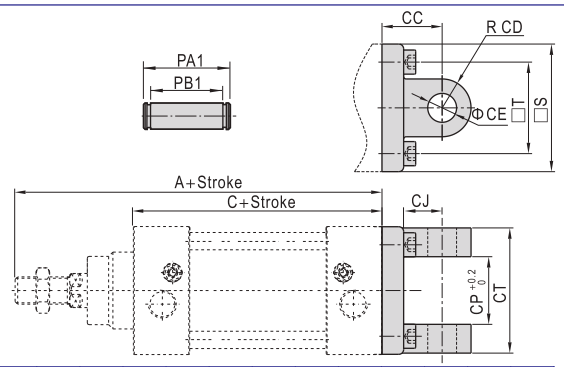

Bore size\Item	A	C	CC	CD	CE	CJ	CP	CT	PA1	PB1	S	T
32	142	94	22	9	10	13	26	45	51	45.5	47	32.5
40	159	105	25	10.5	12	16	28	52	59	52.5	52	38
50	175	106	27	11	12	17	32	60	67	60.5	64	46.5
63	190	121	32	13	16	22	40	70	77	70.5	74	56.5
80	214	128	36	14	16	22	50	90	97	90.5	94	72
100	229	138	41	17.5	20	27	60	110	119	110.5	113	89
125	279	160	50	21.5	25	33	70	130	139	130.5	139	110
160	332	180	55	30	30	35.5	90	170	181	170.5	180	140
200	347	180	60	30	30	36	90	170	181	170.5	220	175

CR

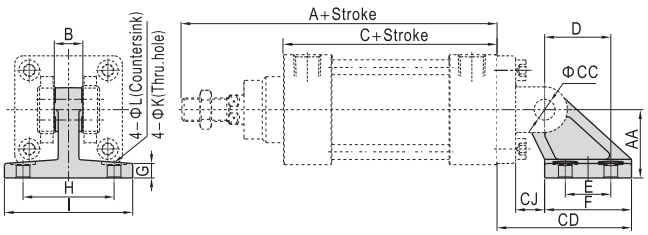

Bore size\Item	A	AA	B	C	CC	CD	CJ	D	E	F	G	H	I	K	L
32	142	32	26	94	10	50	10	21	18	31	8	38	51	6.6	-
40	159	36	28	105	12	56	12	24	22	35	10	41	54	6.6	-
50	175	45	32	106	12	68	13	33	30	45	12	50	65	9	-
63	190	50	40	121	16	77	17	37	35	50	12	52	67	9	-
80	214	63	50	128	16	93	19	47	40	60	14	66	86	11	18
100	229	71	60	138	20	106	22	55	50	70	15	76	96	11	18
125	279	90	70	160	25	135	26	70	60	90	20	94	124	14	20
160	332	115	90	180	30	171	25	97	88	126	25	118	156	14	20
200	347	135	90	180	30	185	31	105	90	130	30	122	162	18	26

Note) CR can't be used alone, it must be used with CB.

TC

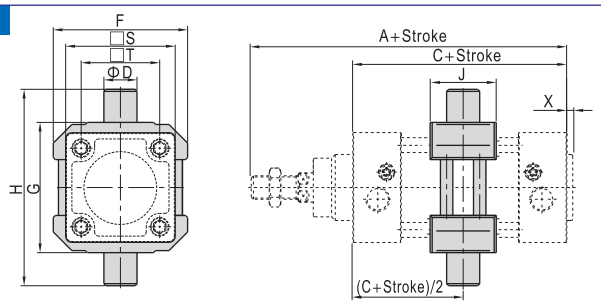

Bore size\Item	A	C	D	F	G	H	J	S	X	T
32	142	94	12	52	50	74	22	47	3	32.5
40	159	105	16	65	63	95	28	53	3.5	38
50	175	106	16	75	75	107	28	65	3.5	46.5
63	190	121	20	90	90	130	30	75	4	56.5
80	214	128	20	112	110	150	32	95	4	72
100	229	138	25	135	132	182	38	115	4	89
125	279	160	25	170	160	210	40	140	4	110
160	332	180	32	210	200	264	50	180	4	140
200	347	180	32	255	250	314	50	220	5	175

Note) The TC accessory has been installed on the barrel of cylinder before it worked off, and the position of the accessories can not be adjusted arbitrarily.
If consumer orders the TC solely, he will not install it on the barrel of standard cylinder directly.

FTC

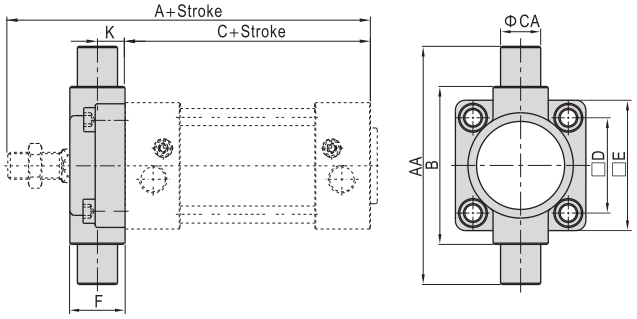

Bore size\Item	A	C	AA	B	CA	D	E	F	K
32	142	94	74	50	12	32.5	46	19	10
40	159	105	95	63	16	38	52	21	10
50	175	106	107	75	16	46.5	64	26	12
63	190	121	130	90	20	56.5	74	28	12
80	214	128	150	110	20	72	94	31	16
100	229	138	182	132	25	89	114	35	16
125	279	160	210	160	25	110	139	43	20
160	332	180	264	200	32	140	179	56	20
200	347	180	314	250	32	175	218	64	20

TCM1

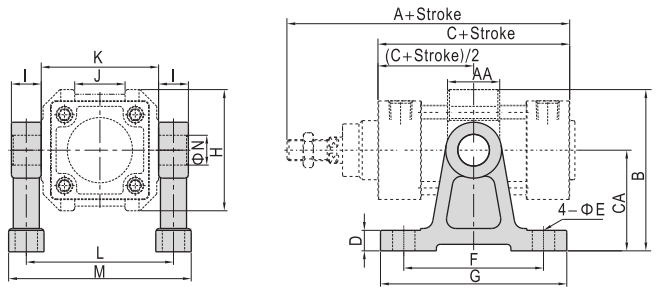

Bore size\Item	A	C	AA	B	CA	D	E	F	G	H	I	J	K	L	M	N
32	142	94	22	66	40	11	9	60	80	52	12	20	50	62	77	12
40	159	105	28	86.5	54	11	12	75	100	65	16	27	63	79	98	16
50	175	106	28	91.5	54	11	12	75	100	75	16	31	75	91	110	16
63	190	121	30	115	70	11	12	85	110	90	20	42	90	110	133	20
80	214	128	32	126	70	11	12	85	110	112	20	54	110	130	153	20
100	229	138	38	157.5	90	19	18	115	155	135	25	68	132	157	185	25
125	279	160	40	175	90	19	18	115	155	170	25	80	160	185	213	25
160	332	180	50	215	110	24	22	140	190	210	32	100	200	232	267	32
200	347	180	50	262.5	135	27	22	150	200	255	32	125	250	282	317	32

Note) The installation position of the accessories can not be adjusted arbitrarily.
When TCM1 be used with FTC, please refer to page 169.

Accessories

TCM2

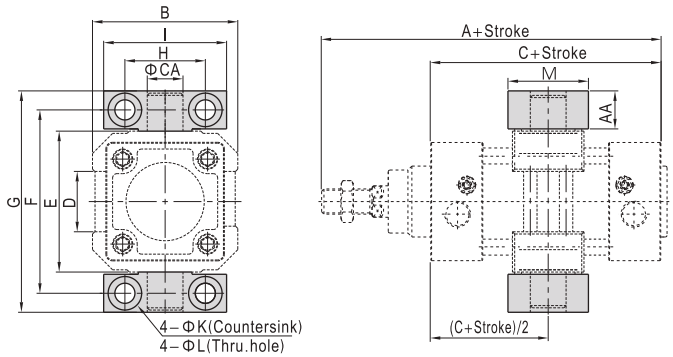

Bore size\Item	A	AA	B	C	CA	D	E	F	G	H	I	K	L	M
32	142	14	52	94	12	20	50	66	80	32	46	11	7	30
40	159	17	65	105	16	27	63	82	99	36	55	15	9	36
50	175	17	75	106	16	31	75	94	111	36	55	15	9	36
63	190	20.5	90	121	20	42	90	113.5	134	42	65	18	11	40
80	214	20.5	112	128	20	54	110	133.5	154	42	65	18	11	40
100	229	24.5	135	138	25	68	132	159.5	184	50	75	20	14	50
125	279	24.5	170	160	25	80	160	187.5	212	50	75	20	14	50
160	332	30	210	180	32	100	200	234	264	60	92	26	18	60
200	347	30	255	180	32	125	250	284	314	60	92	26	18	60

Note) The installation position of the accessories can not be adjusted arbitrarily.
When TCM2 be used with FTC, please refer to page 169.

List for ordering code of accessories

Accessories / Bore size	Mounting accessory			
	LB	FA	FB	CA
32	F-SI32LB	F-SI32FA		F-SI32CA
40	F-SI40LB	F-SI40FA		F-SI40CA
50	F-SI50LB	F-SI50FA		F-SI50CA
63	F-SI63LB	F-SI63FA		F-SI63CA
80	F-SI80LB	F-SI80FA		F-SI80CA
100	F-SI100LB	F-SI100FA		F-SI100CA
125	F-SI125LB	F-SI125FA		F-SI125CA
160	F-SI160LB	F-SI160FA		F-SI160CA
200	F-SI200LB	F-SI200FA		F-SI200CA

Accessories / Bore size	Mounting accessory		
	CB	CR	TC
32	F-SI32CB	F-SI32CR	F-SI32TC
40	F-SI40CB	F-SI40CR	F-SI40TC
50	F-SI50CB	F-SI50CR	F-SI50TC
63	F-SI63CB	F-SI63CR	F-SI63TC
80	F-SI80CB	F-SI80CR	F-SI80TC
100	F-SI100CB	F-SI100CR	F-SI100TC
125	F-SI125CB	F-SI125CR	F-SI125TC
160	F-SI160CB	F-SI160CR	F-SI160TC
200	F-SI200CB	F-SI200CR	F-SI200TC

Accessories / Bore size	Mounting accessory		
	FTC	TCM1	TCM2
32	F-SI32FTC	F-SI32TCM1	F-SI32TCM2
40	F-SI40FTC	F-SI40TCM1	F-SI40TCM2
50	F-SI50FTC	F-SI40TCM1	F-SI40TCM2
63	F-SI63FTC	F-SI63TCM1	F-SI63TCM2
80	F-SI80FTC	F-SI63TCM1	F-SI63TCM2
100	F-SI100FTC	F-SI125TCM1	F-SI125TCM2
125	F-SI125FTC	F-SI125TCM1	F-SI125TCM2
160	F-SI160FTC	F-SI160TCM1	F-SI160TCM2
200	F-SI200FTC	F-SI200TCM1	F-SI160TCM2

Accessories / Bore size	Knuckle			
	I: I Knuckle	Y: Y Knuckle	F: F Knuckle	U: U Knuckle
32	F-M10X125I	F-M10X125Y	F-M10X125F	F-M10X125U
40	F-M12X125I	F-M12X125Y	F-M12X125F	F-M12X125U
50	F-M16X150I	F-M16X150Y	F-M16X150F	F-M16X150U
63	F-M16X150I	F-M16X150Y	F-M16X150F	F-M16X150U
80	F-M20X150I	F-M20X150Y	F-M20X150F	F-M20X150U
100	F-M20X150I	F-M20X150Y	F-M20X150F	F-M20X150U
125	F-M27X200I	F-M27X200Y	-	F-M27X200U
160	F-M36X200I	F-M36X200Y	-	F-M36X200U
200	F-M36X200I	F-M36X200Y	-	F-M36X200U

Accessories / Bore size	Sensor switch					
	CS1–B□	DS1–B□	CS1–F	DS1–F	CS1–U	DS1–U
32	CS1–B1	DS1–B1	CS1–F	DS1–F	CS1–U	DS1–U
40	CS1–B1	DS1–B1				
50	CS1–B2	DS1–B2				
63	CS1–B2	DS1–B2				
80	CS1–B3	DS1–B3				
100	CS1–B4	DS1–B4				
125	CS1–B5	DS1–B5				
160	CS1–B6	DS1–B6				
200	CS1–B7	DS1–B7				

In accordance with ISO15552 standard

Product series

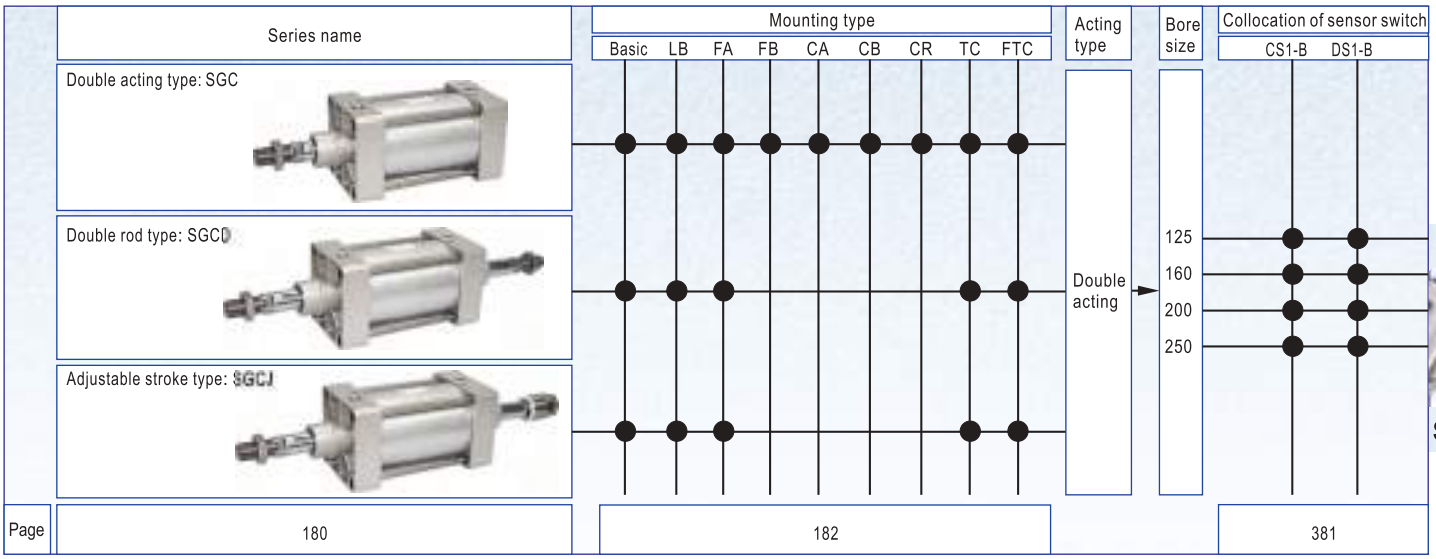

Installation and application

1. When load changes in the work, the cylinder with abundant output capacity shall be selected.
2. Relative cylinder with high temperature resistance or corrosion resistance shall be chosen under the condition of high temperature or corrosion.
3. Necessary protection measure shall be taken in the environment with higher humidity, much dust or water drops, oil dust and welding dregs.
4. Dirty substances in the pipe must be eliminated before cylinder is connected with pipeline to prevent the entrance of particles into the cylinder.
5. The medium used by cylinder shall be filtered to 40 μ m or below.
6. Anti-freezing measure shall be adopted under low temperature environment to prevent moisture freezing.
7. The cylinder shall be carried out test run without load before application. Prior to run, buffer shall be turned to the minimum and gradually released to avoid the damage on cylinder caused by excessive impact.
8. The cylinder shall avoid the influence of side load in operation to maintain the normal work of cylinder and extend the service life.
9. If the cylinder is dismantled and stored for a long time, please conduct anti-rust treatment to the surface. Anti-dust caps shall be added in air inlet and outlet ports.

Criteria for selection: Cylinder thrust

Unit：Newton(N)

Bore size (mm)	Rod size (mm)	Acting type		Pressure area (mm^2)	Operating pressure(MPa)								
					0.1	0.2	0.3	0.4	0.5	0.6	0.7	0.8	0.9
125	32	Double acting	Push side	12272	1227.2	2454.4	3681.6	4908.8	6136.0	7363.2	8590.4	9817.6	11044.8
			Pull side	11468	1146.8	2293.6	3440.4	4587.2	5734.0	6880.8	8027.6	9174.4	10321.2
160	40	Double acting	Push side	20106	2010.6	4021.2	6031.8	8042.4	10053.0	12063.6	14074.2	16084.8	18095.4
			Pull side	18849	1884.9	3769.8	5654.7	7539.6	9424.5	11309.4	13194.3	15079.2	16964.1
200	40	Double acting	Push side	31416	3141.6	6283.2	9424.8	12566.4	15708.0	18849.6	21991.2	25132.8	28274.4
			Pull side	30157	3015.7	6031.4	9047.1	12062.8	15078.5	18094.2	21109.9	24125.6	27141.3
250	50	Double acting	Push side	49086	4908.6	9817.2	14725.8	19634.4	24543.0	29451.6	34360.2	39268.8	44177.4
			Pull side	47123	4712.3	9620.9	14333.2	19045.5	23757.8	28470.1	33182.4	37894.7	42607.0

SGC

Symbol

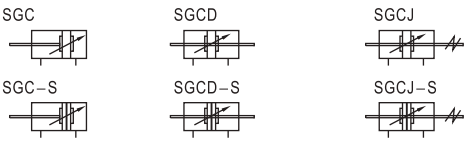

Product feature

1. ISO15552 (original ISO6431) standard cylinder.
2. The piston seal is composed of two Y-shape seals of single-direction structure, which has compensation function, long service life and low start-up pressure.
3. SGC series cylinders are made of aluminum pipe.
4. The buffer adjustment of cylinder is smooth and steady.
5. Cylinders and accessories for installation with several specifications are optional.
6. The seal material with high temperature resistance is adopted to guarantee the normal operation of cylinder at 150℃.

Specification

Bore size(mm)		125	160	200	250
Acting type		Double acting			
Fluid		Air(to be filtered by 40 μ m filter element)			
Mounting type	SGC	Basic FA FB CA CB CR LB TC FTC TCM1 TCM2			
	SGCD, SGCJ	Basic FA LB TC FTC TCM1 TCM2			
Operating pressure		0.1~1.0MPa(15~145psi)(1.0~10.0bar)			
Proof pressure		1.5MPa(215psi)(15bar)			
Temperature ℃		-20~80			
Speed range mm/s		30~500			
Stroke tolerance		$0\sim250^{+1.0}_{0}$ $251\sim1000^{+1.5}_{0}$ $1001\sim1500^{+2.0}_{0}$			
Cushion type		Variable cushion			
Adjustable cushion stroke mm		40	50		60
Port size ①		1/2"	3/4"		1"

① G thread and NPT thread are available. Add) Refer to P381~402 for detail of sensor switch.

Stroke

Bore size (mm)	Standard stroke (mm)	Max. std stroke	Max. stroke
125	25 50 75 80 100 125 150 160 175 200 250 300 350 400 450 500 600 700 800 900 1000	1500	2000
160	25 50 75 80 100 125 150 160 175 200 250 300 350 400 450 500 600 700 800 900 1000	1500	2000
200	25 50 75 80 100 125 150 160 175 200 250 300 350 400 450 500 600 700 800 900 1000	1500	2000
250	25 50 75 80 100 125 150 160 175 200 250 300 350 400 450 500 600 700 800 900 1000	1500	2000

Note) Consult us for non–standard stroke.

Ordering code

SGC 125×50 S □ □ G

SGCD 125×50 S □ □ G

SGCJ 125×50–20 S □ □ G

Model

SGC: Double acting type (Aluminum barrel)
SGCD: Double rod type (Aluminum barrel)
SGCJ: Adjustable stroke type (Aluminum barrel)

Thread type

G: G
T: NPT

Seals Material

Blank: TPU ②
H: Viton
N: NBR

Bore size

125 160 200 250

Stroke

Refer to stroke table for details

Adjustable stroke

SGCJ	10: 10mm
	20: 20mm
	30: 30mm
	40: 40mm
	50: 50mm
	75: 75mm
	100: 100mm
Others	No this code

Magnet

SGC, SGCD SGCJ	Blank: Without magnet
	S: With magnet
Others	No this code

Mounting type ①

	Mounting type	Available series	Memo
Blank		SGC SGCD SGCJ	
LB			
FA			
FTC			Be used with TCM1 TCM2
TC			
FB		SGC	
CA			
CB			
CR			Be used with CB

① Please refer to page 182~184 for accessory parts.
② TPU seals are not available for SGC250.

Inner structure and material of major parts

SGC

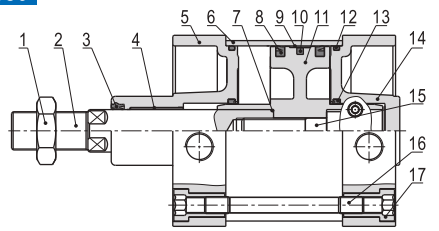

NO.	Item	Material
1	Rod nut	Carbon steel
2	Piston rod	Carbon steel with 20 μ m chrome plated
3	Front cover packing	NBR(SGC250)\TPU(Other)
4	Bushing	Wear resistant material
5	Front cover	Aluminum alloy
6	Aluminum pipe	Aluminum alloy
7	O-ring	NBR
8	Piston seal	NBR
9	Wear ring	Wear resistant material
10	Magnet	Rubber
11	Piston	Aluminum alloy
12	O–ring	NBR
13	Cushion O-ring	NBR(SGC250)\TPU(Other)
14	Back cover	Aluminum alloy
15	Screw	Carbon steel
16	Tie-rod	Carbon steel
17	Tie-rod nut	Carbon steel

Dimensions

SGC

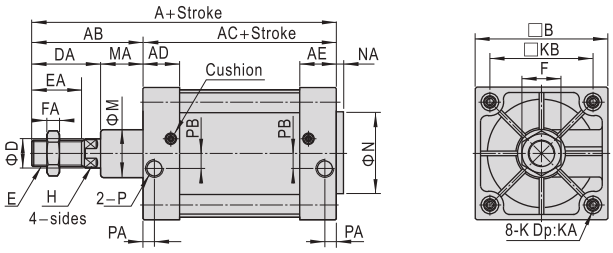

Bore size\Item	A	AB	AC	AD	AE	B	D	DA	E	EA	F	FA
125	279	119	160	46	46	140	32	74	M27×2.0	54	41	13.5
160	332	152	180	50	50	180	40	94	M36×2.0	72	55	18
200	347	167	180	50	50	220	40	100	M36×2.0	72	55	18
250	389	189	200	58	58	282	50	111	M42×2.0	84	65	21

Bore size\Item	H	K	KA	KB	M	MA	N	NA	P	PA	PB
125	27	M12	20	110	60	45	60	4	1/2"	23	14
160	36	M16	24	140	65	58	65	4	3/4"	25	15
200	36	M16	24	175	75	67	75	5	3/4"	25	15
250	46	M20	25	220	90	78	90	8	1"	31	22

Remark: The dimensions of magnet type cylinder are the same as non-magnet type cylinder.

SGCD

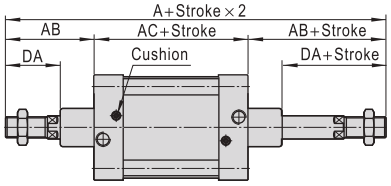

SGCJ

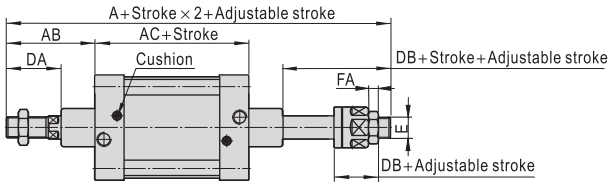

Bore size\Item	A		AB	AC	DA	DB	E	FA
Model	SGCD	SGCJ						
125	398	366.5	119	160	74	42.5	M27X2.0	13.5
160	484	458	152	180	94	68	M36X2.0	18
200	514	482	167	180	100	68	M36X2.0	18
250	578	547	189	200	111	80	M42X2.0	21

Remark：
1. The dimensions of magnet type cylinder are the same as non-magnet type cylinder.
2. The unmarked dimension is the same as SGC standard type.

Ordering code

F-SG 125 TC

- Accessory
- Model
- Bore size
- Accessory type ①

Mounting accessory	FA: FA type
	TC: TC type
	TCM1: TCM1 type
	TCM2: TCM2 type

① The listed accessories are for SG cylinder. Accessories that are adaptable to other cylinders are not shown. Please refer to accessory list on P184 for selection and ordering information.

SGC

Accessory selection

Accessories	Cylinder model	SGC		SGCD,SGCJ	
		Standard	With magnet	Standard	With magnet
Mounting accessory	LB	●	●	●	●
	FA	●	●	●	●
	FB	●	●	×	×
	CA	●	●	×	×
	CB	●	●	×	×
	CR	●	●	×	×
	TC	●	●	●	●
	FTC	●	●	●	●
	TCM1	●	●	●	●
	TCM2	●	●	●	●
Knuckle ①	I	●	●	●	●
	Y	●	●	●	●
	U	●	●	●	●
Sensor switch ②	CS1-B	×	●	×	●
	CS1-BX	×	●	×	●
	DS1-B	×	●	×	●
	DS1-BN	×	●	×	●
	DS1-BP	×	●	×	●

① Please refer to P377~380 for knuckle detail,
② Please refer to P381~402 for detail of sensor switch.

Material of accessories

Accessories / Bore size	Mounting accessories										Knuckle		
	LB	FA	FB	CA	CB	CR	TC	FTC	TCM1	TCM2	I	Y	U
125~200	■	■	■	■	■	■	■	■	■	●	□	□	□
250	■	■	■	■	■	×	■	×	■	■	■	■	×

●——Aluminum alloy, ■——Cast steel,
□——Carbon steel, ×——No this type.

Dimensions

LB

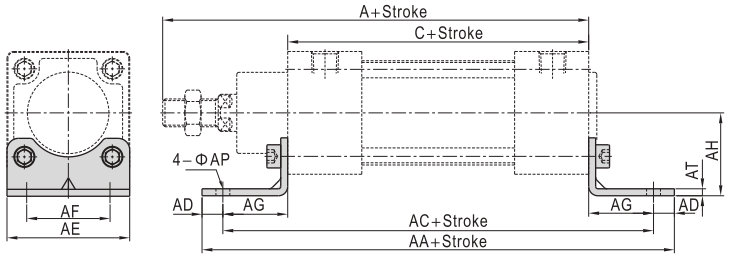

Bore size\Item	A	C	AA	AC	AD	AE	AF	AG	AH	AP	AT
125	279	160	290	250	20	140	90	45	90	16.5	8
160	332	180	340	300	20	180	115	60	115	18.5	8
200	347	180	380	320	30	220	135	70	135	24	9
250	389	200	410	350	30	275	165	75	165	28	19

FA\FB

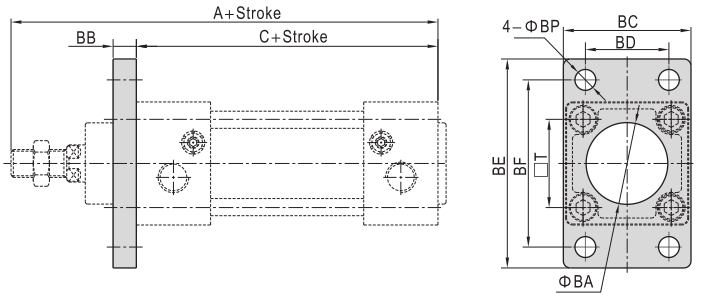

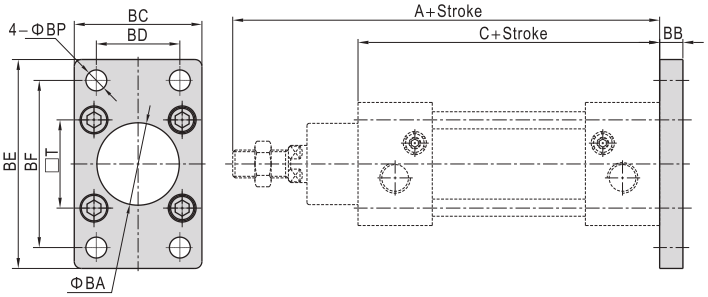

Bore size\Item	A	C	BA	BB	BC	BD	BE	BF	BP	T
125	279	160	60.5	20	139	90	218	180	16.5	110
160	332	180	65.5	20	180	115	280	230	18.5	140
200	347	180	75.5	25	220	135	320	270	24	175
250	389	200	90.5	25	270	165	380	330	26	220

CA

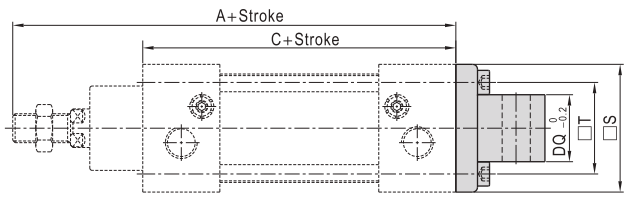

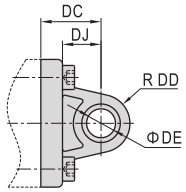

Bore size\Item	A	C	S	T	DC	DD	DE	DJ	DQ
125	279	160	139	110	50	22	25	33	69.7
160	332	180	180	140	55	30	30	35.5	89.7
200	347	180	220	175	60	30	30	37	89.7
250	389	200	270	220	70	35	40	46	109.5

CB

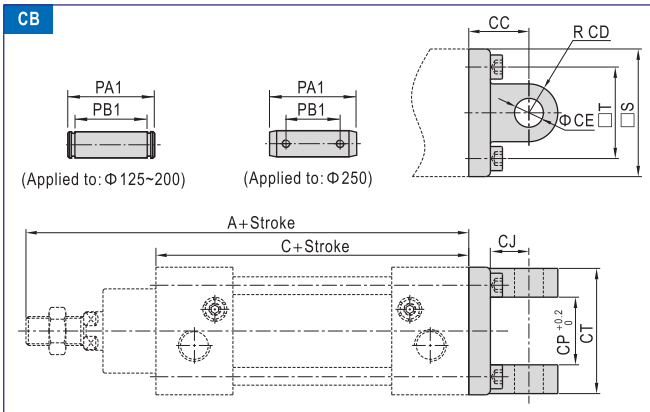

Bore size\Item	A	C	CC	CD	CE	CJ	CP	CT	PA1	PB1	S	T
125	279	160	50	21.5	25	31	70	130	139	130.5	139	110
160	332	180	55	30	30	35.5	90	170	181	170.5	180	140
200	347	180	60	30	30	36	90	170	181	170.5	220	175
250	389	200	70	35	40	46	110.3	200	230	208	270	220

FTC

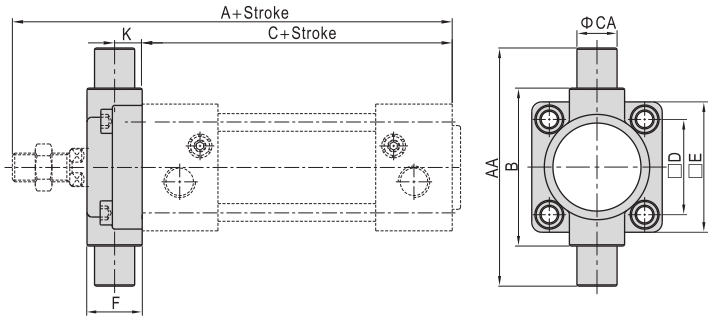

Bore size\Item	A	C	AA	B	CA	D	E	F	K
125	279	160	210	160	25	110	139	43	20
160	332	180	264	200	32	140	179	56	20
200	347	180	314	250	32	175	218	64	20

CR

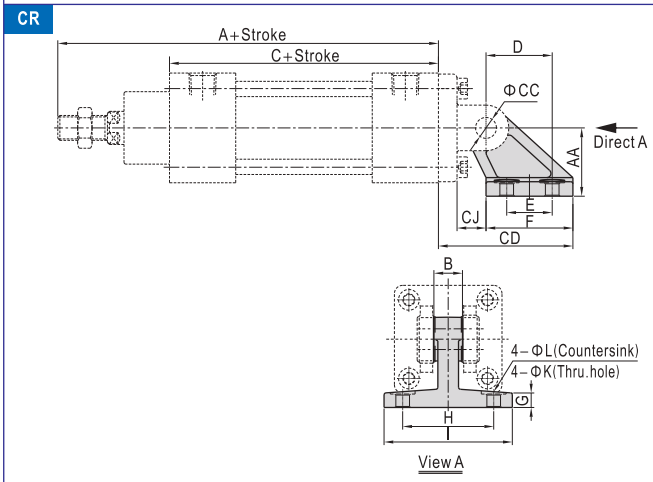

Bore size\Item	A	AA	B	C	CC	CD	CJ	D	E	F	G	H	I	K	L
125	279	90	70	160	25	135	26	70	60	90	20	94	124	14	20
160	332	115	90	180	30	171	25	97	88	126	25	118	156	14	20
200	347	135	90	180	30	185	31	105	90	130	30	122	162	18	26

Note) CR can't be used alone, it must be used with CB.

TCM1

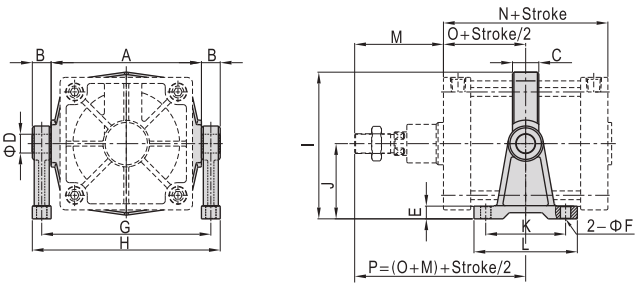

Bore size\Item	A	B	C	D	E	F	G	H	I	J	K	L	M	N	O	P
125	160	25	40	25	19	18	185	213	169.3	90	115	155	119	160	80	199
160	200	32	46	32	24	22	232	267	208.8	110	140	190	152	180	90	242
200	250	32	46	32	27	22	282	317	257.5	135	150	200	167	180	90	257
250	320	40	56	40	27	22	360	400	312	160	170	220	189	200	100	289

Note) The installation position of the accessories can not be adjusted arbitrarily.
When TCM1 be used with FTC, please refer to page 169.

TC

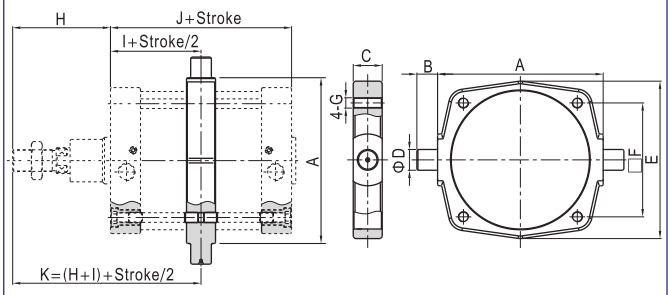

Bore size\Item	A	B	C	D	E	F	G	H	I	J	K
125	160	25	40	25	158.5	110	M12	119	80	160	199
160	200	32	46	32	197.5	140	M16	152	90	180	242
200	250	32	46	32	245	175	M16	167	90	180	257
250	320	40	56	40	304	220	M20	189	100	200	289

Note) The installation position of the accessories can not be adjusted arbitrarily.

TCM2

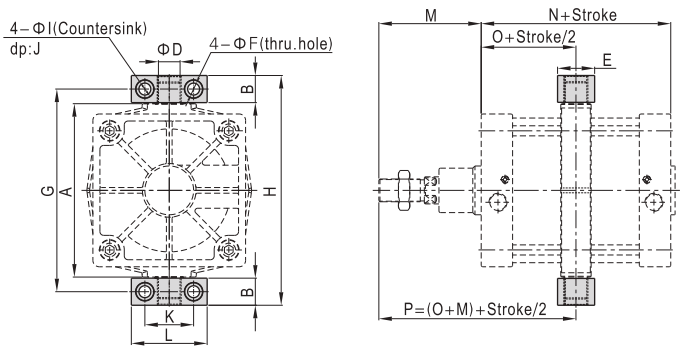

Bore size\Item	A	B	D	E	F	G	H	I	J	K	L	M	N	O	P
125	160	24.5	25	50	14	187.5	212	20	14	50	75	119	160	80	199
160	200	30	32	60	18	234	264	26	17.5	60	92	152	180	90	242
200	250	30	32	60	18	284	314	26	17.5	60	92	167	180	90	257
250	320	50	40	70	22	374	424	33	22	90	140	189	200	100	289

Note) The installation position of the accessories can not be adjusted arbitrarily.
When TCM2 be used with FTC, please refer to page 169.

List for ordering code of accessories

Accessories / Bore size	Mounting accessory		
	LB	FA FB	CA
125	F-SI125LB	F-SI125FA	F-SI125CA
160	F-SI160LB	F-SI160FA	F-SI160CA
200	F-SI200LB	F-SI200FA	F-SI200CA
250	F-SG250LB	F-SG250FA	F-SG250CA

Accessories / Bore size	Mounting accessory		
	CB	CR	TC
125	F-SI125CB	F-SI125CR	F-SG125TC
160	F-SI160CB	F-SI160CR	F-SG160TC
200	F-SI200CB	F-SI200CR	F-SG200TC
250	F-SG250CB	-	F-SG250TC

Accessories / Bore size	Mounting accessory		
	FTC	TCM1	TCM2
125	F-SI125FTC	F-SI125TCM1	F-SI125TCM2
160	F-SI160FTC	F-SI160TCM1	F-SI160TCM2
200	F-SI200FTC	F-SI200TCM1	F-SI160TCM2
250	-	F-SG250TCM1	F-SG250TCM2

Accessories / Bore size	Knuckle		
	I: I Knuckle	Y: Y Knuckle	U: U Knuckle
125	F-M27X200I	F-M27X200Y	F-M27X200U
160	F-M36X200I	F-M36X200Y	F-M36X200U
200	F-M36X200I	F-M36X200Y	F-M36X200U
250	F-M42X200I	F-M42X200Y	-

Accessories / Bore size	Sensor switch				
	CS1−B□	CS1−B□X	DS1−B□	DS1−B□N	DS1−B□P
125	CS1−B1	CS1−B1X	DS1−B1	DS1−B1N	DS1−B1P
160	CS1−B8	CS1−B8X	DS1−B8	DS1−B8N	DS1−B8P
200	CS1−B8	CS1−B8X	DS1−B8	DS1−B8N	DS1−B8P
250	CS1−B5	CS1−B5X	DS1−B5	DS1−B5N	DS1−B5P

SGC

In accordance with ISO6432 standard

Product series

Series name	Mounting type	Acting type	Bore size	Collocation of sensor switch	Meno
	Basic LB FA SDB TC			CS1-M DS1-M CS1-F DS1-F CS1-U DS1-U	
Double acting type: MI Double acting with adj. cushion: MIC		Double acting Double acting(with adj. cushion)	8 10 12 16 20 25 32 40		The bore size of double acting with cushion type is Φ16~Φ40
Double rod type: MID, MICD					
Adjustable stroke type: MU, MICJ					
Single acting type: MSI, MTI		Single acting			
Page	186	189		381	

MI

Installation and application

1. When load changes in the work, the cylinder with abundant output capacity shall be selected.
2. Relative cylinder with high temperature resistance or corrosion resistance shall be chosen under the condition of high temperature or corrosion.
3. Necessary protection measure shall be taken in the environment with higher humidity, much dust or water drops, oil dust and welding dregs.
4. Dirty substances in the pipe must be eliminated before cylinder is connected with pipeline to prevent the entrance of particles into the cylinder.
5. The medium used by cylinder shall be filtered to 40 μ m or below.
6. Anti-freezing measure shall be adopted under low temperature environment to prevent moisture freezing.
7. The cylinder shall be carried out test run without load before application. Prior to run, buffer shall be turned to the minimum and gradually released to avoid the damage on cylinder caused by excessive impact.
8. The cylinder shall avoid the influence of side load in operation to maintain the normal work of cylinder and extend the service life.
9. If the cylinder is dismantled and stored for a long time, please conduct anti-rust treatment to the surface. Anti-dust caps shall be added in air inlet and outlet ports. The front and back cover can not be dismantled, which shall be especially noticed.

Criteria for selection: Cylinder thrust

Unit：Newton(N)

Bore size (mm)	Rod size (mm)	Acting type		Pressure area (mm^2)	Operating pressure(MPa) 0.1	0.2	0.3	0.4	0.5	0.6	0.7
8	4	Single acting	Push side	50.2	-	3.6	8.6	13.6	18.6	23.6	28.7
			Pull side	37.7	-	1.0	4.8	8.6	12.3	16.1	19.9
		Double acting	Push side	50.2	5.0	10.1	15.1	20.1	25.1	30.1	35.2
			Pull side	37.7	3.7	7.5	11.3	15.1	18.8	22.6	26.4
10	4	Single acting	Push side	78.5	-	5.9	13.8	21.6	29.5	37.3	45.2
			Pull side	65.9	-	3.4	10.0	16.6	23.2	29.8	36.4
		Double acting	Push side	78.5	7.9	15.7	23.6	31.4	39.3	47.1	55.0
			Pull side	65.9	6.6	13.2	19.8	26.4	33.0	39.5	46.1
12	6	Single acting	Push side	113.0	-	10.1	21.4	32.7	44.0	55.3	66.6
			Pull side	84.8	-	4.5	12.9	21.4	29.9	38.4	46.9
		Double acting	Push side	113.0	11.3	22.6	33.9	45.2	56.5	67.8	79.1
			Pull side	84.8	8.5	17.0	25.4	33.9	42.4	50.9	59.4
16	6	Single acting	Push side	201.0	-	14.6	34.7	54.8	74.9	95.0	115.1
			Pull side	172.7	-	8.9	26.2	43..5	60.8	78.0	95.3
		Double acting	Push side	201.0	20.1	40.2	60.3	80.4	100.5	120.6	140.7
			Pull side	172.7	17.3	34.5	51.8	69.1	86.4	103.6	120.9
20	8	Single acting	Push side	314.0	-	25.3	56.7	88.1	119.5	150.9	182.3
			Pull side	263.8	-	15.3	41.6	68.0	94.4	120.8	147.1
		Double acting	Push side	314.0	31.4	62.8	94.2	125.6	157.0	188.4	219.8
			Pull side	263.8	26.4	52.8	79.1	105.5	131.9	158.3	184.7
25	10	Single acting	Push side	490.6	-	43.1	92.2	141.3	190.3	239.3	288.4
			Pull side	412.1	-	27.4	68.6	109.8	151.1	192.3	233.5
		Double acting	Push side	490.6	49.1	98.1	147.2	196.2	245.3	294.4	343.4
			Pull side	412.1	41.2	82.4	123.6	164.8	206.1	247.3	288.5
32	12	Single acting	Push side	804.3	30.2	110.9	191.3	277.1	352.1	432.6	513.0
			Pull side	691.2	19.1	88.2	157.4	226.5	295.6	364.7	388.8
		Double acting	Push side	804.3	80.4	160.9	241.3	321.7	402.2	482.6	563.0
			Pull side	691.2	69.1	138.2	207.4	276.5	345.6	414.7	483.8
40	16	Single acting	Push side	1256.6	64.7	190.3	316.0	441.7	567.3	693.0	818.7
			Pull side	1055.6	44.6	150.1	255.7	361.2	466.8	572.4	677.9
		Double acting	Push side	1256.6	125.7	251.3	377.0	502.6	628.3	754.0	879.6
			Pull side	1055.6	105.6	211.1	316.7	422.2	527.8	633.4	738.9

Mini cylinder(Stainless steel, ISO6432)

MI Series

Specification

Bore size(mm)		8	10	12	16	20	25	32	40
Acting type		Double acting, Single acting_push, Single acting_pull							
		–			Double acting with cushion				
Fluid		Air(to be filtered by 40 μ m filter element)							
Operating pressure	Double acting	0.1~1.0MPa(15~145psi)(1.0~10.0bar)							
	Single acting	0.2~1.0MPa(28~145psi)(2.0~10.0bar)							
Proof pressure		1.5MPa(215psi)(15bar)							
Temperature ℃		-20~70							
Speed range mm/s		Double acting: 30~800 Single acting: 50~800							
Stroke tolerance		$0\sim250^{+1.0}_{0}$ $>250^{+1.5}_{0}$							
Cushion type		MIC Series: Variable cushion Other series: Bumper							
Port size ①		M5×0.8					1/8"		1/4"

① G thread is available. Add) Refer to P381~402 for detail of sensor switch.

Stroke

Bore size (mm)			Standard stroke (mm)	Max. std stroke	Max. stroke
MI	–	8	10 15 20 25 30 40 50 60 75 80 100 125 150	150	200
		10	10 15 20 25 30 40 50 60 75 80 100 125 150 160 175 200	200	200
		12	10 15 20 25 30 40 50 60 75 80 100 125 150 160 175 200 250	250	500
	MIC	16	10 15 20 25 30 40 50 60 75 80 100 125 150 160 175 200 250 300 350 400 450 500	500	600
		20		500	800
		25		500	800
		32		500	800
		40		500	800
MID MIJ	–	8	10 15 20 25 30 40 50 60 75 80 100	100	–
		10	10 15 20 25 30 40 50 60 75 80 100	100	–
		12	10 15 20 25 30 40 50 60 75 80 100 125 150 160 175 200	200	–
	MICD MICJ	16	10 15 20 25 30 40 50 60 75 80 100 125 150 160 175 200 250 300	300	–
		20	10 15 20 25 30 40 50 60 75 80 100 125 150 160 175 200 250 300	300	–
		25	10 15 20 25 30 40 50 60 75 80 100 125 150 160 175 200 250 300	300	–
		32	10 15 20 25 30 40 50 60 75 80 100 125 150 160 175 200 250 300	500	–
		40	350 400 450 500	500	–

Bore size (mm)		Standard stroke (mm)
MSI MTI	8	10 15 20 25 30 40 50
	10	10 15 20 25 30 40 50
	12	10 15 20 25 30 40 50
	16	10 15 20 25 30 40 50 60 75 80 100
	20	10 15 20 25 30 40 50 60 75 80 100 125 150
	25	10 15 20 25 30 40 50 60 75 80 100 125 150
	32	10 15 20 25 30 40 50 60 75 80 100 125 150
	40	10 15 20 25 30 40 50 60 75 80 100 125 150

Note) Consult us for non–standard stroke.

Symbol

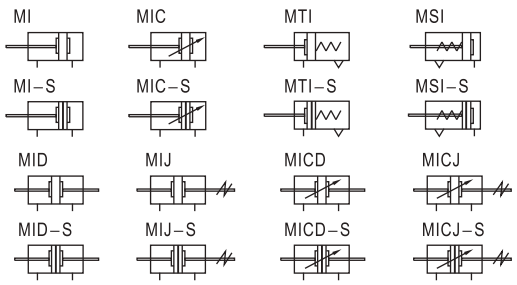

Product feature

1. In accordance with ISO6432 standard(Φ8~Φ25).
2. Front and back cover owns fixed bumper pad which can reduce the impact of direction-change of the cylinder.
3. There are several mode of back cover, which makes the installation of cylinder more convenient.
4. Front and back cover and stainless steel block adopt riveted rolling packed structure to form a reliable connection.
5. Piston rod and cylinder body with the material of stainless steel make the cylinder adapt general working environment with corrosivity.
6. There are cylinders and accessories with several specifications for installation for your choice.

Ordering code

MI 10×40 S CA □ G

MID 10×40 S □ G

MIJ 10×40–30 S □ G

Model

MI: Mini cylinder(Double acting)
MSI: Mini cylinder(Single acting_push)
MTI: Mini cylinder(Single acting_pull)
MID: Mini cylinder(Double rod)
MIJ: Mini cylinder(Adjustable stroke)
MIC: Mini cylinder (Double acting with cushion)
MICD: Mini cylinder (Double rod with cushion)
MICJ: Mini cylinder (Adjustable stroke with cushion)

Bore size

Model	Bore size
MIC, MICD, MICJ	16 20 25 32 40
Others	8 10 12 16 20 25 32 40

Stroke

Refer to stroke table for details

Adjustable stroke

Model	Adjustable stroke
MIJ MICJ	10: 10mm
	20: 20mm
	30: 30mm
	40: 40mm
	50: 50mm
	75: 75mm
	100: 100mm
Others	No this code

Thread type

G: G ②

Mounting type ①

Model	Mounting type
MI MIC MSI MTI	Blank: No accessories
	FA: FA type
	SDB: SDB type
	LB: LB type
	TC: TC type
MID MICD MIJ MICJ	Blank: No accessories
	FA: FA type
	LB: LB type
	TC: TC type

Back cover

Model	Back cover	Bore size
MI MSI MTI	CA: Pivot type	Φ8~Φ25
	U: Perpendicular 90°	Φ8~Φ40
	R: Axial air-in	Φ16~Φ40
	CM: Round-end type	Φ16~Φ40
MIC	CA: Pivot type	Φ16~Φ25
	U: Perpendicular 90°	Φ16~Φ40
	CM: Round-end type	Φ16~Φ40
Others	No this code	

Magnet

Blank: Without magnet
S: With magnet

① Please refer to page 189~190 for accessory parts.

② MI Series are all G thread. PT thread, NPT thread are unavailable.

Inner structure and material of major parts

MI

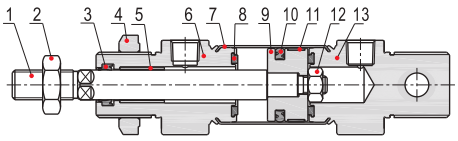

NO.	Item		Material
1	Rod		SUS304
2	Rod nut		Carbon steel
3	Front cover packing		NBR
4	Front cover nut		Carbon steel
5	Bushing		Wear resistant material
6	Front cover		Aluminum alloy
7	Barrel		SUS304
8	Bumper		TPU
9	Piston	Φ8~Φ12	SUS304
		Others	Aluminum alloy
10	Piston seal		NBR
11	Wear ring		Wear resistant material
12	Nut		Carbon steel
13	Back cover		Aluminum alloy

Dimensions

MI

CA Type

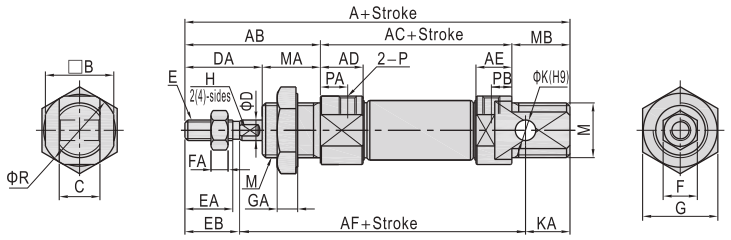

U Type

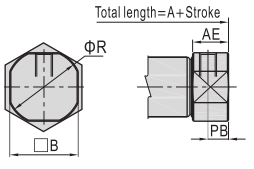

R Type

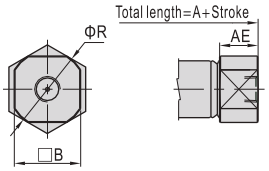

CM Type

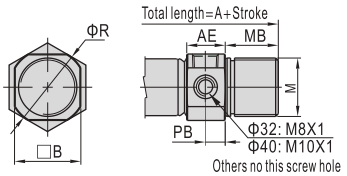

Bore size\Item	A				AB	AC	AD	AE		AF	P	PA	PB		R
Back cover	CA	U	R	CM				CA	U/R/CM				CA	U/CM	
8	86	74	-	-	28	46	11.5	9.5	9.5	64	M5×0.8	7	5	5	17
10	86	74	-	-	28	46	11.5	9.5	9.5	64	M5×0.8	7	5	5	17
12	105	88	-	-	38	50	12.5	10.5	10.5	75	M5×0.8	8	6	6	20
16	111	94	94	111	38	56	12.5	10.5	10.5	82	M5×0.8	8	6	6	22
20	126	106	106	126	44	62	14.5	14.5	14.5	95	1/8"	7.5	7.5	7.5	29
25	137	114.5	115	137	50	65	16	16	16	104	1/8"	8	8	8	33.5
32	-	125	126	140	58	-	16.5	-	16.5	-	1/8"	9	-	9	37.5
40	-	158	158	174	69	-	22	-	22	-	1/4"	12	-	12	46.5

Bore size\Item	B	C	D	DA	E	EA	EB	F	FA	G	GA	H	K	KA	M	MA	MB
8	15	8	4	16	M4×0.7	10.5	12	7	2.2	17	6	-	4	10	M12×1.25	12	12
10	15	8	4	16	M4×0.7	10.5	12	7	2.2	17	6	-	4	10	M12×1.25	12	12
12	18	12	6	21	M6×1.0	14	16	10	5	22	6	5(2-sides)	6	14	M16×1.5	17	17
16	20	12	6	21	M6×1.0	14.5	16	10	5	22	6	5(2-sides)	6	13	M16×1.5	17	17
20	25	16	8	24	M8×1.25	18	20	12	6	29	7	6(2-sides)	8	11	M22×1.5	20	20
25	30	16	10	28	M10×1.25	20.5	22	17	6	29	7	8(4-sides)	8	11	M22×1.5	22	22
32	34.5	-	12	28	M10×1.25	17.5	20	17	6	36	7	10(4-sides)	-	-	M30×1.5	30	14
40	42.5	-	16	34	M12×1.25	21	24	17	7	46	8	14(4-sides)	-	-	M38×1.5	35	16

Remark: The dimensions of magnet type cylinder are the same as non-magnet type cylinder.

MIC Φ16~Φ25

CA Type

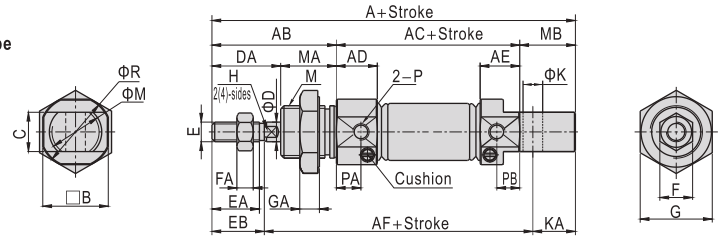

U Type

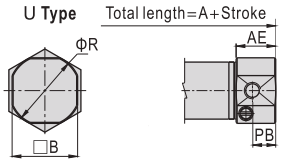

CM Type

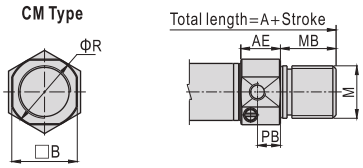

Bore size\Item	A		AB	AC	AD	AE		AF	B	C	D	DA	E	EA	EB
Back cover	CA/CM	U				CA/CM	U								
16	111	94	38	56	12.5	12	12	82	20	12	6	21	M6×1.0	14.5	16
20	126	106	44	62	14.5	14.5	14.5	95	25	16	8	24	M8×1.25	18	20
25	137	113.5	50	65	16	16	14.5	104	30	16	10	28	M10×1.25	20.5	22

Bore size\Item	F	FA	G	GA	H	K	KA	M	MA	MB	P	PA	PB	R
16	10	5	22	6	5(2-sides)	6	13	M16×1.5	17	17	M5×0.8	7.5	7	22
20	12	6	29	7	6(2-sides)	8	11	M22×1.5	20	20	1/8"	7.5	7.5	29
25	17	6	29	7	8(4-sides)	8	11	M22×1.5	22	22	1/8"	8	8	33.5

Remark: The dimensions of magnet type cylinder are the same as non-magnet type cylinder.

MIC

Φ32, Φ40

CM Type

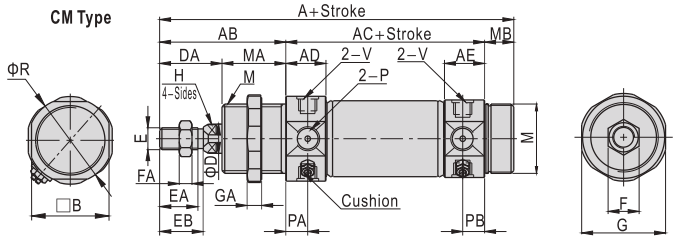

U Type

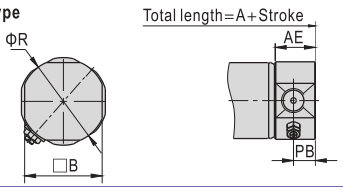

Bore size\Item	A		AB	AC	AD	AE		B	D	DA
Back cover	U	CM				U	CM			
32	124	140	58	68	16.5	14.5	16.5	34.5	12	28
40	157.5	174	69	89	22	21.5	22	42.5	16	32

Bore size\Item	E	EA	EB	F	FA	G	GA	H
32	M10×1.25	17.5	20	17	6	36	7	10(4-sides)
40	M12×1.25	21	24	17	7	46	8	24(4-sides)

Bore size\Item	M	MA	MB	P	PA	PB		R	V
Back cover						U	CM		
32	M30×1.5	30	14	1/8"	9	7.5	9	37.5	M8X1
40	M38×1.5	35	16	1/4"	12	11.5	12	46.5	M10X1

Remark：The dimensions of magnet type cylinder are the same as non-magnet type cylinder.

MSI

CA Type

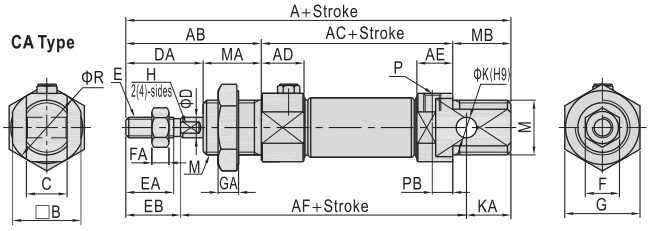

U Type

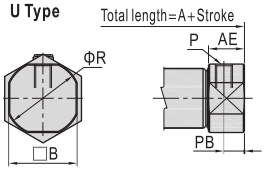

R Type

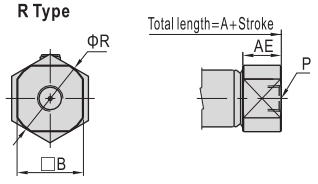

CM Type

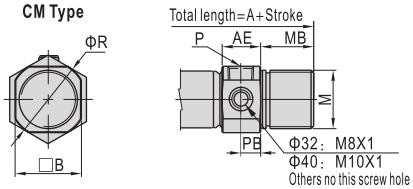

MTI

CA Type

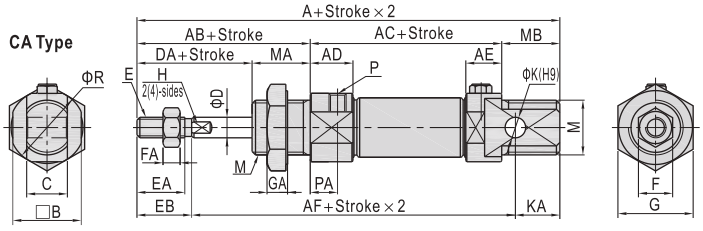

U Type

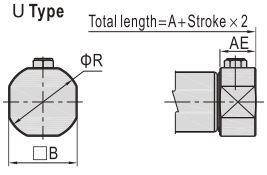

R Type

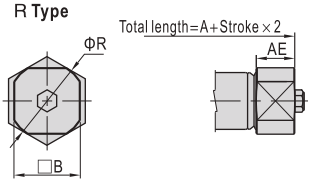

CM Type

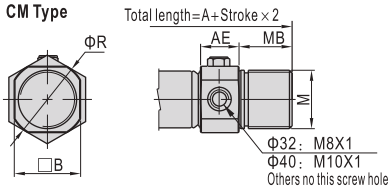

Item	A												AB	AC			AD	AF		
Back cover	CA			U			R			CM										
Bore size\Stroke	0~50	51~100	101~150	0~50	51~100	101~150	0~50	51~100	101~150	0~50	51~100	101~150		0~50	51~100	101~150		0~50	51~100	101~150
8	111	-	-	99	-	-	-	-	-	-	-	-	28	71	-	-	11.5	89	-	-
10	111	-	-	99	-	-	-	-	-	-	-	-	28	71	-	-	11.5	89	-	-
12	130	-	-	113	-	-	-	-	-	-	-	-	38	75	-	-	12.5	100	-	-
16	136	161	-	119	144	-	119	144	-	136	161	-	38	81	106	-	12.5	107	132	-
20	151	176	201	131	156	181	131	156	181	151	176	201	44	87	112	137	14.5	120	145	170
25	162	187	212	139.5	164.5	189.5	140	165	190	162	187	212	50	90	115	140	16	129	154	179
32	-	-	-	150	175	200	151	176	201	165	190	215	58	-	-	-	16.5	-	-	-
40	-	-	-	183	208	233	183	208	233	199	224	249	69	-	-	-	22	-	-	-

Bore size\Item	AE		B	C	D	DA	E	EA	EB	F	FA	G	GA	H	K	KA	M	MA	MB	P	PA	PB		R
Back cover	CA	U/R/CM																				CA	U/CM	
8	9.5	9.5	15	8	4	16	M4×0.7	10.5	12	7	2.2	17	6	-	4	10	M12×1.25	12	12	M5×0.8	7	5	5	17
10	9.5	9.5	15	8	4	16	M4×0.7	10.5	12	7	2.2	17	6	-	4	10	M12×1.25	12	12	M5×0.8	7	5	5	17
12	10.5	10.5	18	12	6	21	M6×1.0	14	16	10	5	22	6	5(2-sides)	6	14	M16×1.5	17	17	M5×0.8	8	6	6	20
16	10.5	10.5	20	12	6	21	M6×1.0	14.5	16	10	5	22	6	5(2-sides)	6	13	M16×1.5	17	17	M5×0.8	8	6	6	22
20	14.5	14.5	25	16	8	24	M8×1.25	18	20	12	6	29	7	6(2-sides)	8	11	M22×1.5	20	20	1/8"	7.5	7.5	7.5	29
25	16	16	30	16	10	28	M10×1.25	20.5	22	17	6	29	7	8(4-sides)	8	11	M22×1.5	22	22	1/8"	8	8	8	33.5
32	-	16.5	34.5	-	12	28	M10×1.25	17.5	20	17	6	36	7	10(4-sides)	-	-	M30×1.5	30	14	1/8"	9	-	9	37.5
40	-	22	42.5	-	16	34	M12×1.25	21	24	17	7	46	8	14(4-sides)	-	-	M38×1.5	35	16	1/4"	12	-	12	46.5

Remark：The dimensions of magnet type cylinder are the same as non-magnet type cylinder.

MID

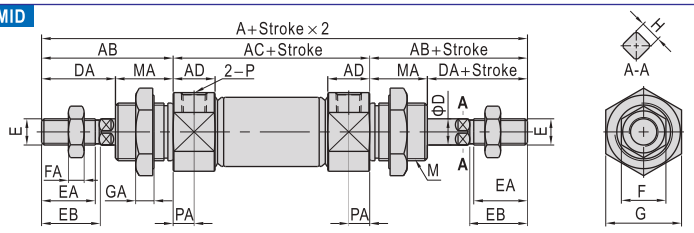

MIJ

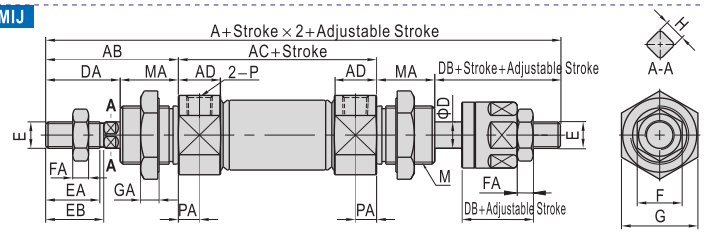

Bore size\Item / Model	A MID	A MIJ	AB	AC	AD	D	DA	DB	E	EA	EB
8	104	103	28	48	11.5	4	16	15	M4×0.7	10.5	12
10	104	103	28	48	11.5	4	16	15	M4×0.7	10.5	12
12	128	128	38	52	12.5	6	21	21	M6×1.0	14	16
16	134	134	38	58	12.5	6	21	21	M6×1.0	14.5	16
20	150	151	44	62	14.5	8	24	25	M8×1.25	18	20
25	165	164	50	65	16	10	28	27	M10×1.25	20	22
32	184	183	58	68	16.5	12	28	27	M10×1.25	17.5	20
40	227	221	69	89	22	16	34	28	M12×1.25	21	24

Bore size\Item	F	FA	G	GA	H	M	MA	P	PA
8	7	2.2	17	6	-	M12×1.25	12	M5×0.8	7
10	7	2.2	17	6	-	M12×1.25	12	M5×0.8	7
12	10	5	22	6	5(2-Sides)	M16×1.5	17	M5×0.8	8
16	10	5	22	6	5(2-Sides)	M16×1.5	17	M5×0.8	8
20	12	6	29	7	6(2-Sides)	M22×1.5	20	1/8"	7.5
25	17	6	29	7	8(4-Sides)	M22×1.5	22	1/8"	8
32	17	6	36	7	10(4-Sides)	M30×1.5	30	1/8"	9
40	17	7	46	8	14(4-Sides)	M38×1.5	35	1/4"	12

Remark: The dimensions of magnet type cylinder are the same as non-magnet type cylinder.

MICD Φ16~Φ40

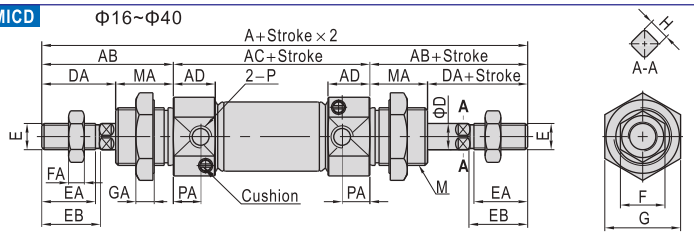

MICJ Φ16~Φ40

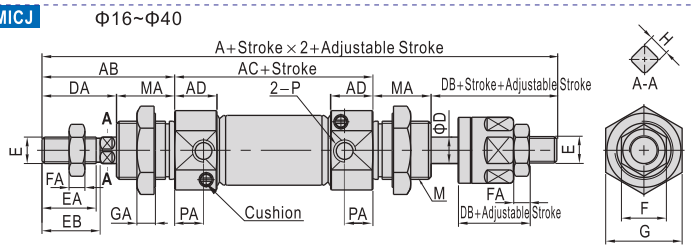

Bore size\Item / Model	A MICD	A MICJ	AB	AC	AD	D	DA	DB	E	EA	EB
16	132.5	132.5	38	56.5	12.5	6	21	21	M6×1.0	14.5	16
20	150	151	44	62	14.5	8	24	25	M8×1.25	18	20
25	165	164	50	65	16	10	28	27	M10×1.25	20.5	22
32	184	183	58	68	16.5	12	28	27	M10×1.25	17.5	20
40	227	221	69	89	22	16	34	28	M12×1.25	21	24

Bore size\Item	F	FA	G	GA	H	M	MA	P	PA
16	10	5	22	6	5(2-Sides)	M16×1.5	17	M5×0.8	7.5
20	12	6	29	7	6(2-Sides)	M22×1.5	20	1/8"	7.5
25	17	6	29	7	8(4-Sides)	M22×1.5	22	1/8"	8
32	17	6	36	7	10(4-Sides)	M30×1.5	30	1/8"	9
40	17	7	46	8	14(4-Sides)	M38×1.5	35	1/4"	12

Remark: The dimensions of magnet type cylinder are the same as non-magnet type cylinder.

Ordering code

F-MI 10 LB

- Accessory
- Model
- Bore size
- Accessory type ①

Mounting accessory	LB: LB type
	FA: FA type
	SDB: SDB type ②
	TC: TC type

① Please refer to accessory list for selection and ordering information.
② SDB is attached with relevant PIN.

Accessory selection

Cylinder model / Accessories		MI, MIC Standard	MI, MIC With magnet	MSI, MTI Standard	MSI, MTI With magnet	MID, MICD, MIJ, MICJ Standard	MID, MICD, MIJ, MICJ With magnet
Mounting accessory	LB	●	●	●	●	●	●
	FA	●	●	●	●	●	●
	SDB	●	●	●	●	×	×
	TC	●	●	●	●	●	●
Knuckle ①	I	●	●	●	●	●	●
	Y	●	●	●	●	●	●
	U	●	●	●	●	●	●
	F	●	●	●	●	●	●
Sensor switch②	CS1-M	×	●	×	●	×	●
	DS1-M	×	●	×	●	×	●
	CS1-F	×	●	×	●	×	●
	DS1-F	×	●	×	●	×	●
	CS1-U	×	●	×	●	×	●
	DS1-U	×	●	×	●	×	●

① Please refer to P377~380 for knuckle detail,
② Please refer to P381~402 for detail of sensor switch.

Material of accessories

Accessories / Bore size	Mounting accessories LB	FA	SDB	TC	Knuckle I	Y	F	U
8~40	△	△	△	▲	□	□	□	□

▲——SUS304, △——SPCC, □——Carbon steel.

List for ordering code of accessories

Accessories / Bore size	Mounting accessory LB	FA	SDB	TC
8	F-MI10LB	F-MI8FA	F-MI8SDB	F-MI10TC
10				
12	F-MI12LB	F-MI12FA	F-MI12SDB	F-MI12TC
16				
20	F-MI20LB	F-MI20FA	F-MI20SDB	F-MI20TC
25				
32	F-MI32LB	-	F-MI32SDB	F-MI32TC
40	F-MI40LB	-	F-MI40SDB	F-MI40TC

Accessories / Bore size	Knuckle I: I Knuckle	Y: Y Knuckle	F: F Knuckle	U: U Knuckle
8	F-M4X070I	F-M4X070Y	F-M4X070F	F-M4X070U
10				
12	F-M6X100I	F-M6X100Y	F-M6X100F	F-M6X100U
16				
20	F-M8X125I	F-M8X125Y	F-M8X125F	F-M8X125U
25	F-M10X125I	F-M10X125Y	F-M10X125F	F-M10X125U
32				
40	F-M12X125I	F-M12X125Y	F-M12X125F	F-M12X125U

Accessories / Bore size	Sensor switch CS1-M□	DS1-M□	CS1-F	DS1-F	CS1-U	DS1-U
8	CS1-M-S08	DS1-M-S08	CS1-F	DS1-F	CS1-U	DS1-U
10	CS1-M-S10	DS1-M-S10				
12	CS1-M-S12	DS1-M-S12				
16	CS1-M-S16	DS1-M-S16				
20	CS1-M-S20	DS1-M-S20				
25	CS1-M-S25	DS1-M-S25				
32	CS1-M-S32	DS1-M-S32				
40	CS1-M-S40	DS1-M-S40				

Accessories

Dimensions

LB

Φ8~Φ25

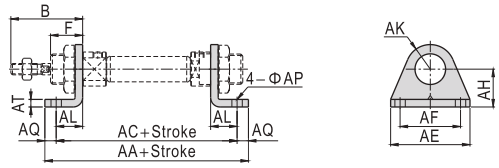

Φ32、Φ40

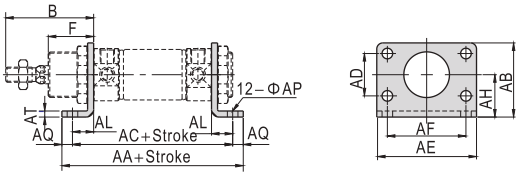

Bore size\Item	AA	AB	AC	AD	AE	AF	AH	AK	AL	AP	AQ	AT	B	F
8	78	-	68	-	35	25	16	10	11	4.5	5	3	28	12
10	78	-	68	-	35	25	16	10	11	4.5	5	3	28	12
12	90	-	78	-	42	32	20	13	14	5.5	6	4	38	17
16	96	-	84	-	42	32	20	13	14	5.5	6	4	38	17
20	112	-	96	-	54	40	25	20	17	6.6	8	5	44	20
25	115	-	99	-	54	40	25	20	17	6.6	8	5	50	22
32	110	49	96	28	66	52	28	-	14	7	7	4	58	30
40	149	58	129	30	80	60	33	-	20	9	10	5	69	35

FA

Φ8~Φ25

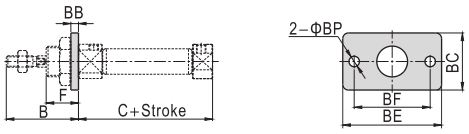

Bore size\Item	B	C	BB	BC	BE	BF	BP	F
8	28	46	3	22	40	30	4.5	12
10	28	46	3	22	40	30	4.5	12
12	38	50	4	30	52	40	5.5	17
16	38	56	4	30	52	40	5.5	17
20	44	62	5	40	66	50	6.6	20
25	50	65	5	40	66	50	6.6	22

SDB

Φ8~Φ25

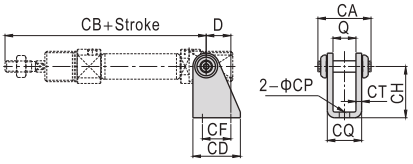

Φ32, Φ40

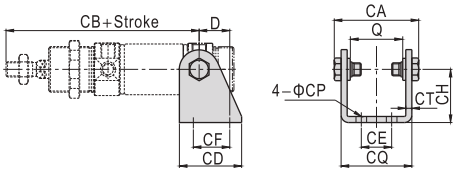

Φ32, Φ40

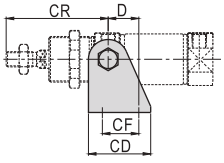

Bore size\Item	D	Q	CA	CB	CD	CE	CF	CH	CP	CQ	CT	CR
8	11	8.1	18.4	76	20	-	12.5	24	4.5	13.1	2.5	-
10	11	8.1	18.4	76	20	-	12.5	24	4.5	13.1	2.5	-
12	13	12.1	28	91	25	-	15	27	5.5	18.1	3	-
16	13	12.1	28	98	25	-	15	27	5.5	18.1	3	-
20	16	16.1	38	115	32	-	20	30	6.6	24.1	4	-
25	16	16.1	38	126	32	-	20	30	6.6	24.1	4	-
32	20	34.6	55.5	117	41	20	24	35	7	46.6	4	67
40	27	42.6	69.6	146	52	28	30	40	9	58.6	5	81

TC

Φ8~Φ25

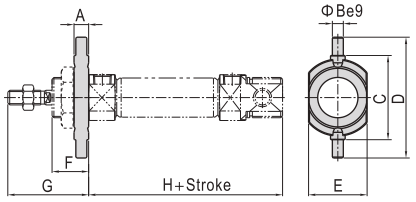

Φ32, Φ40

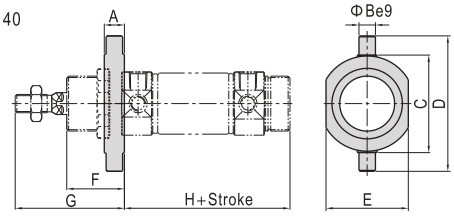

Bore size\Item	A	B	C	D	E	F	G	H
8	6	4	26	38	20	12	28	58
10	6	4	26	38	20	12	28	58
12	8	6	38	58	25	17	38	67
16	8	6	38	58	25	17	38	73
20	8	6	46	66	32	20	44	82
25	8	6	46	66	32	22	50	87
32	11	9	54	74	45	30	58	82
40	12	10	64	84	55	35	69	101

Product series

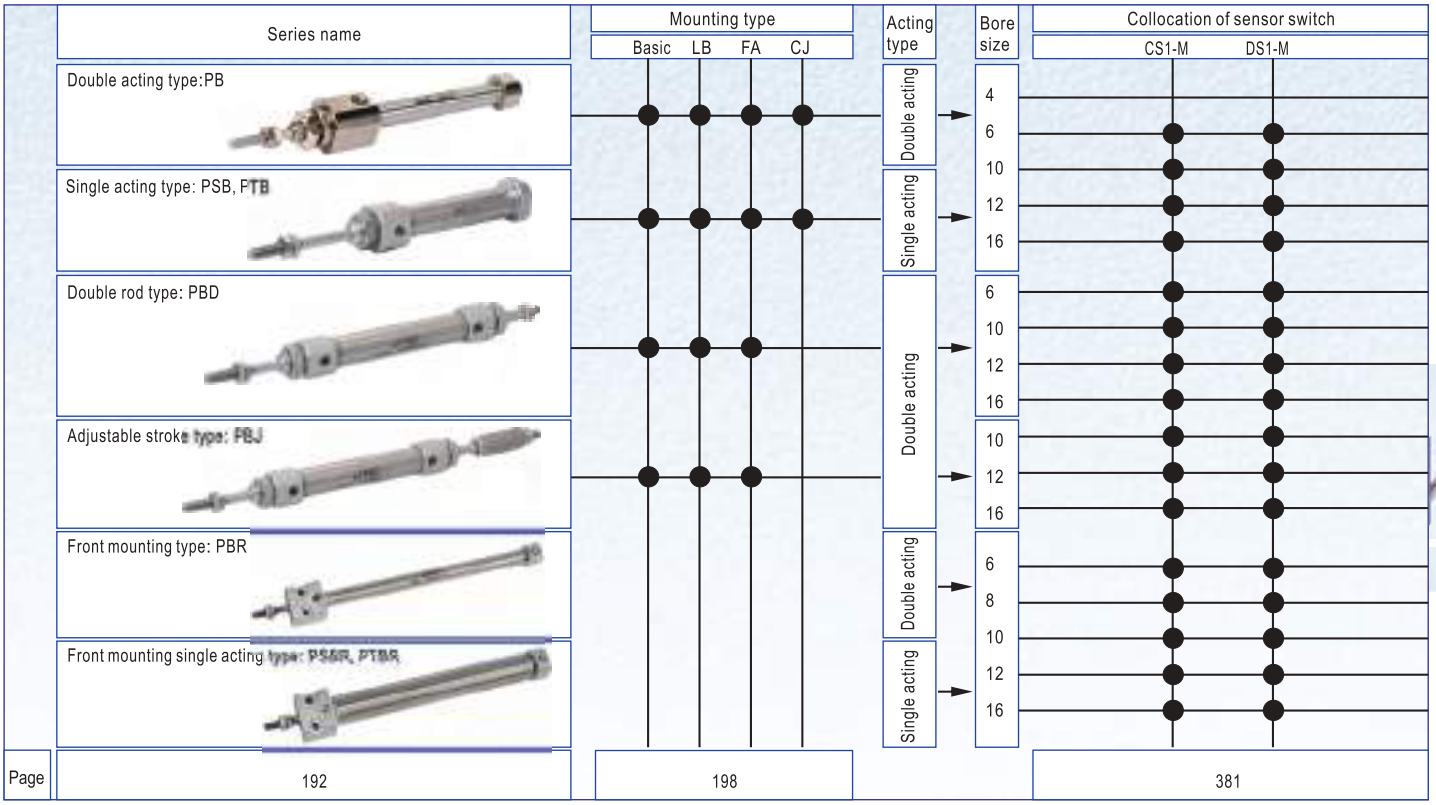

PB

Installation and application

1. When load changes in the work, the cylinder with abundant output capacity shall be selected.
2. Relative cylinder with high temperature resistance or corrosion resistance shall be chosen under the condition of high temperature or corrosion.
3. Necessary protection measure shall be taken in the environment with higher humidity, much dust or water drops, oil dust and welding dregs.
4. Dirty substances in the pipe must be eliminated before cylinder is connected with pipeline to prevent the entrance of particles into the cylinder.
5. The medium used by cylinder shall be filtered to 40 μ m or below.
6. Anti-freezing measure shall be adopted under low temperature environment to prevent moisture freezing.
7. The load of the cylinder with the diameter of Φ4 needs to be coaxial with the cylinder to avoid side load, otherwise, piston rod will be bent and deformed and damage the thread at the end of the rod. Single-acting type can not be added in return.
8. If the cylinder is dismantled and stored for a long time, Please to conduct anti-rust treatment to the surface. Anti-dust caps shall be added in air inlet and outlet ports. The front and back cover can not be dismantled, which shall be especially noticed.

Criteria for selection: Cylinder thrust

Unit：Newton(N)

Bore size (mm)	Rod size (mm)	Acting type		Pressure area (mm^2)	Operating pressure(MPa)						
					0.1	0.2	0.3	0.4	0.5	0.6	0.7
4	2	Single acting-Push side		12.6	-	0.3	1.6	2.8	4.1	5.3	6.6
		Double acting	Push side	12.6	1.3	2.5	3.8	5.0	6.3	7.6	8.8
			Pull side	9.4	0.9	1.9	2.8	3.8	4.7	5.6	6.6
6	3	Single acting	Push side	28.3	-	2.2	5.0	7.8	10.6	13.5	16.3
			Pull side	21.2	-	0.7	2.9	5.0	7.1	9.2	11.3
		Double acting	Push side	28.3	2.8	5.7	8.5	11.3	14.2	17.0	19.8
			Pull side	21.2	2.1	4.2	6.4	8.5	10.6	12.7	14.8
8	4	Single acting	Push side	50.3	-	3.6	8.6	13.6	18.7	23.7	28.7
			Pull side	37.7	-	1.0	4.8	8.6	12.4	16.1	19.9
		Double acting	Push side	50.3	5.0	10.1	15.1	20.1	25.2	30.2	35.2
			Pull side	37.7	3.8	7.5	11.3	15.1	18.9	22.6	26.4
10	4	Single acting	Push side	78.5	-	6.2	14.1	21.9	29.8	37.6	45.5
			Pull side	65.9	-	3.7	10.3	16.9	23.5	30.1	36.7
		Double acting	Push side	78.5	7.9	15.7	23.6	31.4	39.3	47.1	55.0
			Pull side	65.9	6.6	13.2	19.8	26.4	33.0	39.5	46.2
12	5	Single acting	Push side	113.0	-	9.0	20.3	31.6	42.9	54.2	65.5
			Pull side	93.4	-	5.1	14.4	23.8	33.1	42.4	51.8
		Double acting	Push side	113.0	11.3	22.6	33.9	45.2	56.5	67.8	79.1
			Pull side	93.4	9.3	18.7	28.0	37.4	46.7	56.0	65.4
16	5	Single acting	Push side	201.0	-	14.5	34.6	54.7	74.8	94.9	115.0
			Pull side	181.3	-	10.6	28.7	46.8	65.0	83.1	101.2
		Double acting	Push side	201.0	20.1	40.2	60.3	80.4	100.5	120.6	140.7
			Pull side	181.3	18.1	36.3	54.4	72.5	90.7	108.8	126.9

Pen size cylinder

PB Series

Specification

Bore size(mm)		4	6	10	12	16
Acting type		Double acting, Single acting_push	Double acting, Single acting_push, Single acting_pull			
Fluid		Air(to be filtered by 40 μ m filter element)				
Operating pressure	Double acting	0.2~0.7MPa(28~100psi)(2.0~7.0bar)	0.1~0.7MPa(15~100psi)(1.0~7.0bar)			
	Single acting	0.3~0.7MPa(36~100psi)(3.0~7.0bar)	0.2~0.7MPa(28~100psi)(2.0~7.0bar)			
Proof pressure		1.1MPa(160psi)(11bar)				
Temperature ℃		-20~70				
Speed range mm/s		50~500	50~800			
Stroke tolerance		$^{+1.0}_{0}$	0~250 $^{+1.0}_{0}$ >250 $^{+1.5}_{0}$			
Cushion type		No cushion	Bumper			
Port size		Tube	M5 × 0.8			

Add) Refer to P381~402 for detail of sensor switch.

Stroke

Bore size (mm)			Standard stroke (mm)	Max. std stroke	Max. stroke
PB		4	5 10 15 20	20	20
		6	10 15 20 25 30 40 50 60	60	60
		10	10 15 20 25 30 40 50 60 75 80 100 125 150 160 175 200	200	200
		12	10 15 20 25 30 40 50 60 75 80 100 125 150 160 175 200	200	300
		16	10 15 20 25 30 40 50 60 75 80 100 125 150 160 175 200 250 300	300	300
PBD	-	6	5 10 15 20 25 30 40 50	50	–
	PBJ	10	10 15 20 25 30 40 50 60 75 80 100	100	–
		12	10 15 20 25 30 40 50 60 75 80 100 125 150 160 175 200	200	–
		16	10 15 20 25 30 40 50 60 75 80 100 125 150 160 175 200	200	–

Bore size (mm)			Standard stroke (mm)
PSB	-	4	5 10 15 20
PTB		6	5 10 15 20 25 30 40 50 60
		10	5 10 15 20 25 30 40 50 60
		12	5 10 15 20 25 30 40 50 60
		16	5 10 15 20 25 30 40 50 60

Note) Consult us for non–standard stroke.

Symbol

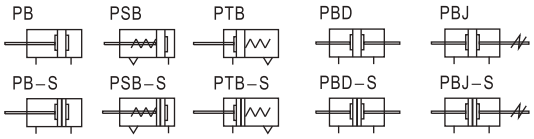

Product feature

1. JIS standard is implemented.
2. It belongs to mini cylinder that has compact structure, small volume and light weight.
3. The guide precision of piston rod is high and no additional lubricant is needed.
4. PB4 and PB6 can only be front mounted. PB10, PB12 and PB16 has the flexibility of both front and rear mount.
5. Piston rod stainless steel barrel make the cylinder adapt general corrosive working environment.
6. There are cylinders and accessories with several specifications for installation for your choice.
7. It has small cylinder diameter and quick reaction, suitable for the working environment with higher frequency.

Ordering code

PB 10 × 30 S CB □

PBD 10 × 30 S □

PBJ 10 × 30–10 S □

Model

PB: Pen size cylinder (Double acting)
PSB: Pen size cylinder (Single acting_push)
PTB: Pen size cylinder (Single acting_pull)
PBD: Pen size cylinder (Double rod)
PBJ: Pen size cylinder (Adjustable stroke)

Mounting type ①

Model	Mounting type
PB PSB PTB	Blank: No accessories
	FA: FA type
	LB: LB type
	CJ: CJ type
PBD PBJ	Blank: No accessories
	FA: FA type
	LB: LB type

Bore size

Model	Bore size
PB, PSB	4 6 10 12 16
PTB, PBD	6 10 12 16
PBJ	10 12 16

Back cover

Model	Back cover	Bore size
PB PSB	CB: Double clevis	Φ10~Φ16
	U: Perpendicular 90°	Φ10~Φ16
	R: Axial air-in	Φ6~Φ16
PTB	CB: Double clevis	Φ10~Φ16
	R: Axial air-in	Φ6~Φ16
PBD, PBJ	No this code	

Stroke

Refer to stroke table for details

Adjustable stroke

Model	Adjustable stroke
PBJ	10: 10mm
	20: 20mm
	30: 30mm
	40: 40mm
	50: 50mm
	75: 75mm
	100: 100mm
Others	No this code

Magnet

Bore size	Magnet
Φ4	Blank: Without magnet
Φ6~Φ16	Blank: Without magnet
	S: With magnet

① Please refer to page 198 for accessory parts.

Inner structure and material of major parts

Double acting without magnet(Φ6)

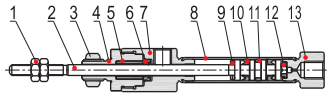

Double acting without magnet(Φ10~Φ16)

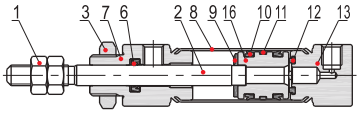

NO.	Item	Material
1	Rod nut	Carbon steel
2	Piston rod	SUS304
3	Front cover nut	Carbon steel
4	Packing retainer	Brass(Φ4)\Aluminum alloy(Others)
5	Bushing	Wear resistant material
6	Front cover O-ring	NBR
7	Front cover	Brass(Φ4)\Aluminum alloy(Others)
8	Barrel	Bronze(Φ4)\SUS304(Others)
9	Bumper	TPU
10	Piston seal	NBR
11	Wear ring	Wear resistant material
12	Bumper	TPU
13	Back cover	Brass(Φ4)\Aluminum alloy(Others)

Dimensions

PB

Φ4(Without magnet)(R Type)

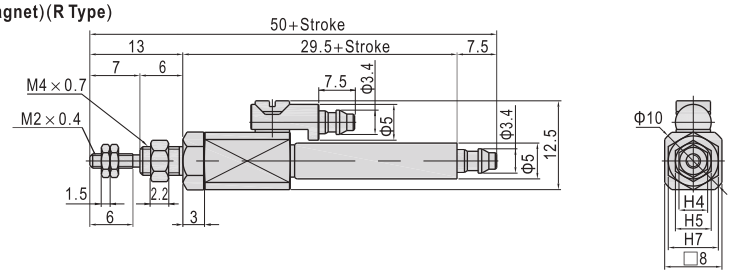

Φ6(R Type)

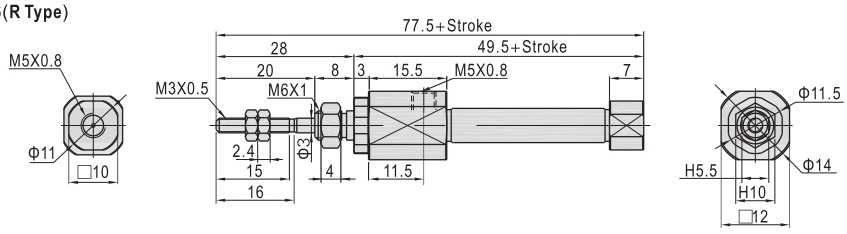

Note) Only axial air intake type of back cover is available for Φ4, Φ6mm bore size.

Φ10~Φ16

U Type(Perpendicular 90°)

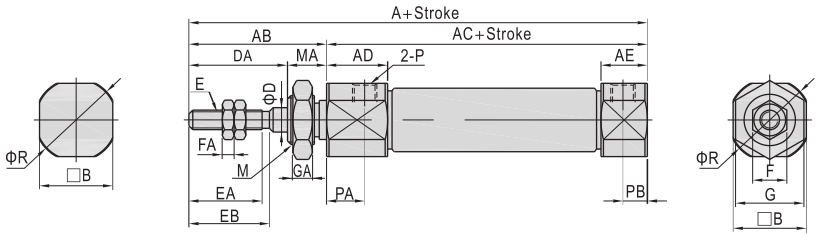

CB Type(Double clevis)

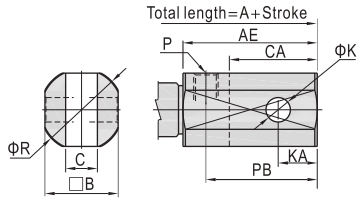

R Type(Axial air-in)

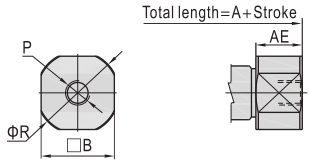

Bore size\Item / Back cover	A U	A CB	A R	AB	AC	AD	AE U/R	AE CB	B	C	CA	D	DA	E	EA	EB
10	74	87	74	28	46	11.5	9.5	22.5	12	3.3	13	4	20	M4×0.7	15	16.5
12	74	92	74	28	46	11.5	9.5	27.5	15	6.6	18	5	20	M5×0.8	15	16.5
16	76	94	76	28	48	12	9.5	27.5	18	6.6	18	5	20	M5×0.8	15	16.5

Bore size\Item / Back cover	F	FA	G	GA	K	KA	M	MA	P	PA	PB U	PB CB	R
10	7	2.2	11	4	3.3	5	M8×1.0	8	M5×0.8	7.5	5	18	14
12	8	4	14	4	5	8	M10×1.0	8	M5×0.8	7.5	5	23	17
16	8	4	14	4	5	8	M10×1.0	8	M5×0.8	7.5	5	23	20

Remark: The dimensions of magnet type cylinder are the same as non-magnet type cylinder.

PSB

Φ4(Without magnet)(R Type)

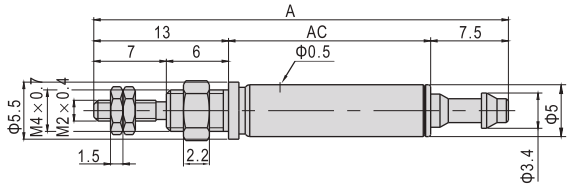

Stroke\Item	A	AC
5	40	19.5
10	49	28.5
15	58	37.5
20	67	46.5

Φ6(R Type)

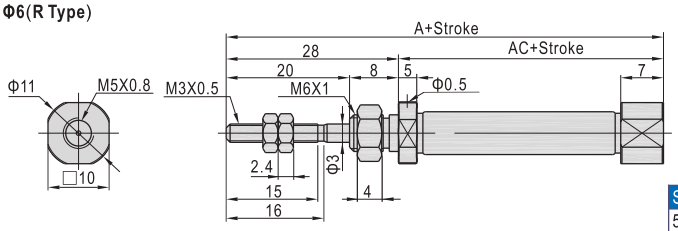

Stroke\Item	A	AC
5~15	70	42
16~30	79	51
31~45	83	55
46~60	97	69

Note) Only axial air intake type of back cover is available for Φ4, Φ6mm bore size.

PB

Φ10~Φ16

U Type(Perpendicular 90°)

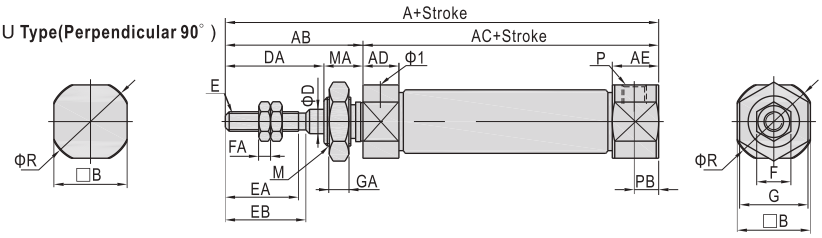

CB Type(Double clevis)

R Type(Axial air-in)

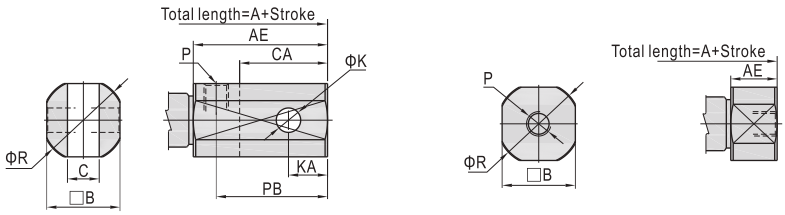

Bore size\Item	A											
Back cover	U				CB				R			
Stroke	5~15	16~30	31~45	46~60	5~15	16~30	31~45	46~60	5~15	16~30	31~45	46~60
10	73.5	81	93	105	86.5	94	106	118	73.5	81	93	105
12	73.5	81	93	105	91.5	99	111	123	73.5	81	93	105
16	74.5	83	95	107	92.5	101	113	125	74.5	83	95	107

Bore size\Item	AB	AC				AD	AE		B	C	CA	D	DA
Back cover							U/R	CB					
Stroke		5~15	16~30	31~45	46~60		-	-					
10	28	45.5	53	65	77	5	9.5	22.5	12	3.3	13	4	20
12	28	45.5	53	65	77	5	9.5	27.5	15	6.6	18	5	20
16	28	46.5	55	67	79	5	9.5	27.5	18	6.6	18	5	20

Bore size\Item	E	EA	EB	F	FA	G	GA	K	KA	M	MA	P	PB		R
Back cover													U	CB	
10	M4×0.7	15	16.5	7	2.2	11	4	3.3	5	M8×1.0	8	M5×0.8	5	18	14
12	M5×0.8	15	16.5	8	4	14	4	5	8	M10×1.0	8	M5×0.8	5	23	17
16	M5×0.8	15	16.5	8	4	14	4	5	8	M10×1.0	8	M5×0.8	5	23	20

Remark: The dimensions of magnet type cylinder are the same as non-magnet type cylinder.

PTB

Φ6(R Type)

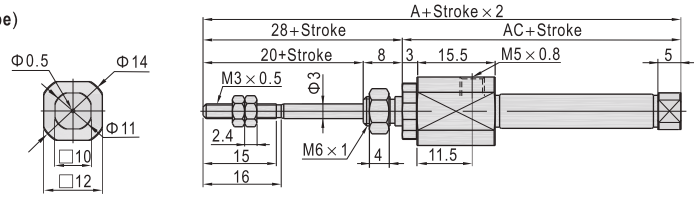

Stroke\Item	A	AC
5~15	82	54
16~30	91	63
31~45	95	67
46~60	109	81

Note) Only axial air intake type of back cover is available for Φ6mm bore size.

Φ10~Φ16

R Type(Axial air-in)

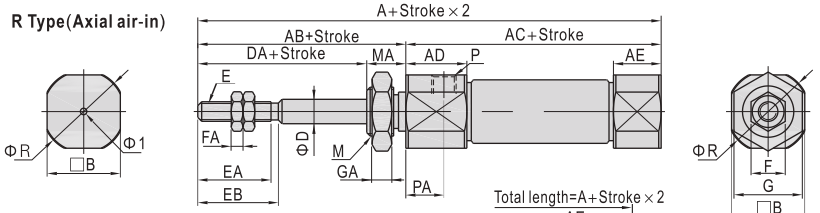

CB Type(Double clevis)

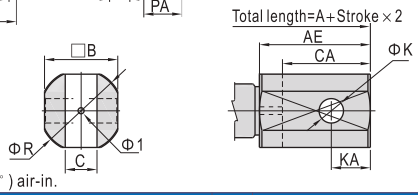

Note)Φ10~Φ16 bore sized don't have perpendicular(90°) air-in.

Bore size\Item	A								AB	AC				AD
Back cover	R				CB					–				
Stroke	5~15	16~30	31~45	46~60	5~15	16~30	31~45	46~60		5~15	16~30	31~45	46~60	
10	76.5	84	96	108	89.5	97	109	121	28	48.5	56	68	80	11.5
12	76.5	84	96	108	94.5	102	114	126	28	48.5	56	68	80	11.5
16	77.5	86	98	110	95.5	104	116	128	28	49.5	58	70	82	12

Bore size\Item	AE		B	C	CA	D	DA	E	EA	EB	F	FA	G	GA	K	KA	M	MA	P	PA	R
Back cover	R	CB																			
10	5	18	12	3.3	13	4	20	M4×0.7	15	16.5	7	2.2	11	4	3.3	5	M8×1.0	8	M5×0.8	7.5	14
12	5	23	15	6.6	18	5	20	M5×0.8	15	16.5	8	4	14	4	5	8	M10×1.0	8	M5×0.8	7.5	17
16	5	23	18	6.6	18	5	20	M5×0.8	15	16.5	8	4	14	4	5	8	M10×1.0	8	M5×0.8	7.5	20

Remark：The dimensions of magnet type cylinder are the same as non-magnet type cylinder.

PBD

Φ6

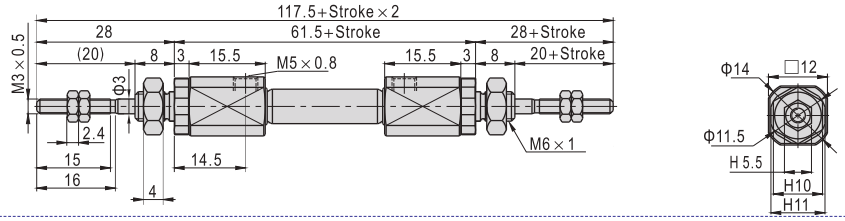

Φ10~Φ16

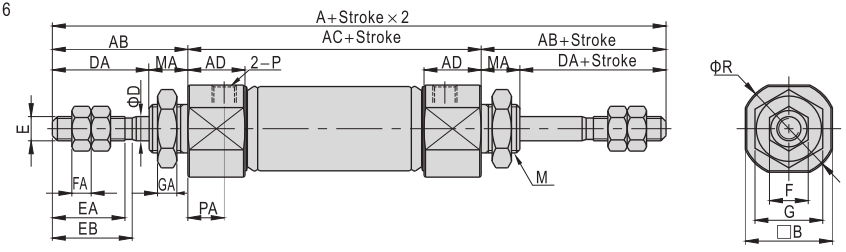

PBJ Φ10~Φ16

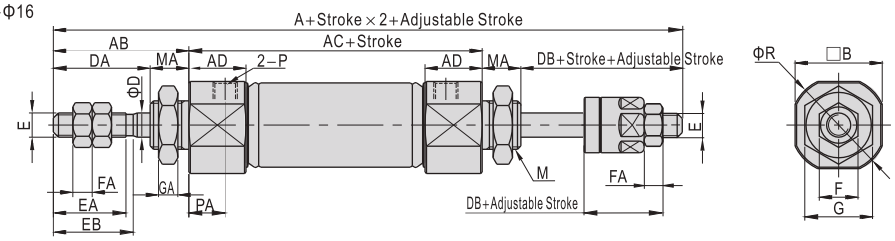

Bore size\Item	A		AB	AC	AD	B	D	DA	DB	E	EA	EB	F	FA	G	GA	M	MA	P	PA
Model	PBD	PBJ																		
10	104	99	28	48	11.5	12	4	20	15	M4×0.7	15	16.5	7	2.2	11	4	M8×1.0	8	M5×0.8	7.5
12	104	101	28	48	11.5	15	5	20	17	M5×0.8	15	16.5	8	4	14	4	M10×1.0	8	M5×0.8	7.5
16	107	104	28	51	12	18	5	20	17	M5×0.8	15	16.5	8	4	14	4	M10×1.0	8	M5×0.8	7.5

Remark：The dimensions of magnet type cylinder are the same as non-magnet type cylinder.

Symbol

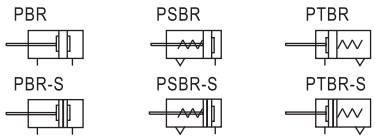

Product feature

1. JIS standard is implemented.
2. It belongs to mini cylinder that has compact structure, small volume and light weight.
3. The guide precision of piston rod is high and no additional lubricant is needed.
4. Screw holes are designed for mounting directly at the front cover without any accessories.
5. Piston rod stainless steel barrel make the cylinder adapt general corrosive working environment.
6. It has small cylinder diameter and quick reaction, suitable for the working environment with higher frequency.

Specification

Bore size(mm)		6	8	10	12	16
Acting type		Double acting, Single acting_push, Single acting_pull				
Fluid		Air(to be filtered by 40 μ m filter element)				
Operating pressure	Double acting	0.1~0.7MPa(15~100psi)(1.0~7.0bar)				
	Single acting	0.2~0.7MPa(28~100psi)(2.0~7.0bar)				
Proof pressure		1.1MPa(160psi)(11bar)				
Temperature ℃		-20~70				
Speed range mm/s		50~800				
Stroke tolerance		$0\sim250^{+1.0}_{0}$ $>250^{+1.5}_{0}$				
Cushion type		Bumper				
Port size		M5 × 0.8				

Add) Refer to P381~402 for detail of sensor switch.

Stroke

Bore size (mm)		Standard stroke (mm)	Max. std stroke	Max. stroke
PBR	6	10 15 20 25 30 40 50 60	60	60
	8	10 15 20 25 30 40 50 60 75 80 100 125 150	150	150
	10	10 15 20 25 30 40 50 60 75 80 100 125 150 160 175 200	200	200
	12	10 15 20 25 30 40 50 60 75 80 100 125 150 160 175 200	200	300
	16	10 15 20 25 30 40 50 60 75 80 100 125 150 160 175 200 250 300	300	300
PSBR PTBR	6	5 10 15 20 25 30 40 50 60	–	–
	8	5 10 15 20 25 30 40 50 60	–	–
	10	5 10 15 20 25 30 40 50 60	–	–
	12	5 10 15 20 25 30 40 50 60 75	–	–
	16	5 10 15 20 25 30 40 50 60 75 100	–	–

Note) Consult us for non–standard stroke.

Ordering code

PBR 16 × 30 S U

Model

PBR: Pen size cylinder (Double acting)
PSBR: Pen size cylinder (Single acting_push)
PTBR: Pen size cylinder (Single acting_pull)

Back cover

Model	Back cover	Bore size
PBR	U: Perpendicular 90°	8 10 12 16
PSBR	R: Axial air-in	6 8 10 12 16
PTBR	R: Axial air-in	6 8 10 12 16

Bore size

6 8 10 12 16

Magnet

Blank: Without magnet
S: With magnet

Stroke

Refer to stroke table for details

Mounting type

Top bolt mounting

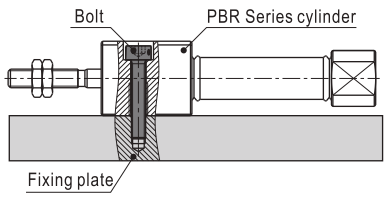

Bottom bolt mounting

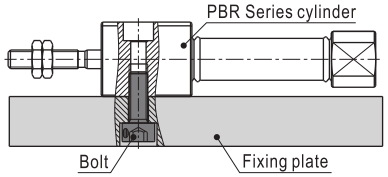

Note: Use an applicable bolt to mount upward from the bottom.

Inner structure and material of major parts

Double acting with magnet

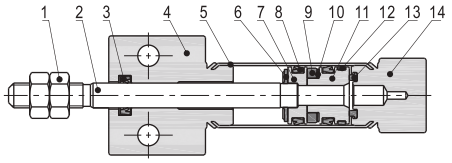

NO.	Item	Material
1	Rod nut	Carbon steel
2	Piston rod	SUS304
3	Front cover O-ring	NBR
4	Front cover	Aluminum alloy
5	Barrel	SUS316L
6	Bumper	TPU
7	Piston	SUS303\Aluminum alloy
8	Piston seal	NBR
9	Magnet	Sintered metal (Neodymium-iron-boron)
10	Magnet washer	NBR
11	Magnet holder	Aluminum alloy
12	Wear ring	Wear resistant material
13	Bumper	TPU
14	Back cover	Aluminum alloy

Dimensions

Model: PBR

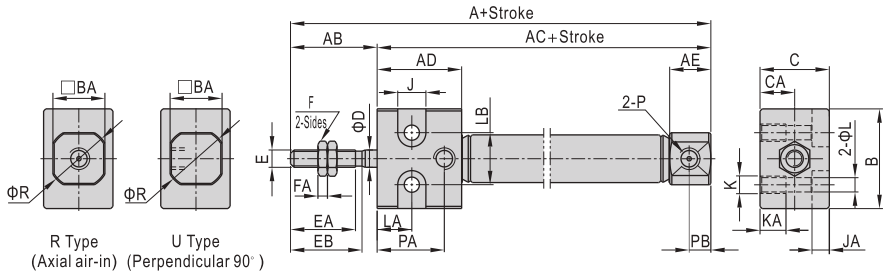

Bore size\Item	A	AB	AC	AD	AE	B	BA	C	CA	D	E	EA	EB	F	FA
6	70	20	50	19	7	17.2	10	14	7	3	M3×0.5	15	16	5.5	2.4
8	74	20	54	19.5	9.5	19.2	12	16	8	4	M4×0.7	15	16.5	7	2.2
10	74	20	54	19.5	9.5	19.2	12	16	8	4	M4×0.7	15	16.5	7	2.2
12	74	20	54	19.5	9.5	24.2	15	20	10	5	M5×0.8	15	16.5	8	4
16	76	20	56	20	9.5	24.2	18	20	10	6	M5×0.8	15	16.5	8	4

Bore size\Item	J	JA	K	KA	L	LA	LB	P	PA	PB	R
6	6.5	4	M4×0.7	7	3.3	8	10	M5×0.8	14	-	11
8	6.5	4	M4×0.7	7	3.3	8	12	M5×0.8	15	5	14
10	6.5	4	M4×0.7	7	3.3	8	12	M5×0.8	15.5	5	14
12	8	5	M5×0.8	8	4.3	8	16	M5×0.8	15.5	5	17
16	8	5	M5×0.8	8	4.3	8	16	M5×0.8	15.5	5	20

Remark: The dimensions of magnet type cylinder are the same as non-magnet type cylinder.
Only axial air intake type of back cover is available for Φ6mm bore size.

Model: PSBR

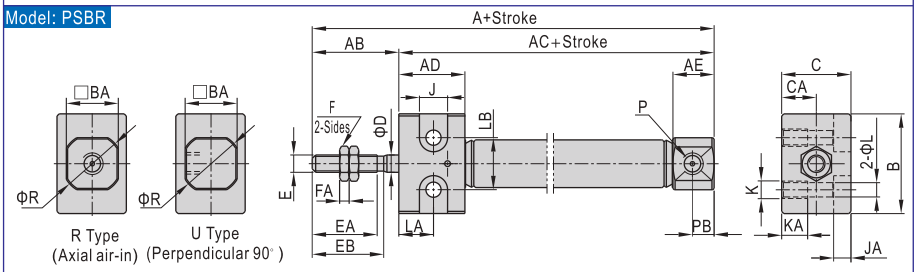

Model: PTBR

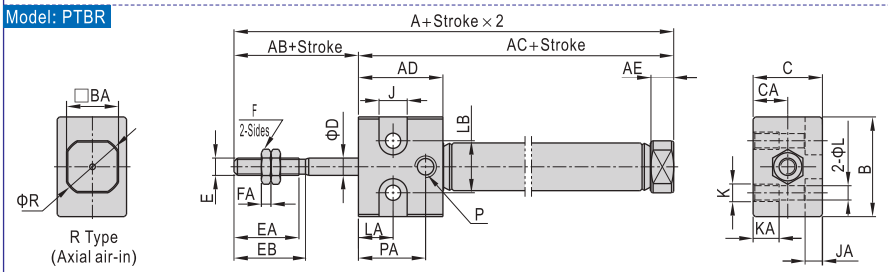

Bore size\Item / Stroke		A 5~15	16~30	31~45	46~60	61~75	76~100	AB	AC 5~15	16~30	31~45	46~60	61~75	76~100	AD	AE	B
PSBR	6	70	79	83	97	-	-	20	50	59	63	77	-	-	13	7	17.2
	8	76.5	82.5	93.5	101.5	-	-	20	56.5	62.5	73.5	81.5	-	-	13	9.5	19.2
	10	73.5	81	93	105	-	-	20	53.5	61	73	85	-	-	13	9.5	19.2
	12	73.5	81	93	105	111.5	-	20	53.5	61	73	85	91.5	-	13	9.5	24.2
	16	74.5	83	95	107	113	119	20	54.5	63	75	87	93	99	13	9.5	24.2

Bore size\Item / Stroke		A 5~15	16~30	31~45	46~60	61~75	76~100	AB	AC 5~15	16~30	31~45	46~60	61~75	76~100	AD	AE	B
PTBR	6	74.5	83.5	87.5	101.5	-	-	20	54.5	63.5	67.5	81.5	-	-	19	5	17.2
	8	78.5	84.5	95.5	103.5	-	-	20	58.5	64.5	75.5	83.5	-	-	19.5	5	19.2
	10	76.5	84	96	108	-	-	20	56.5	64	76	88	-	-	19.5	5	19.2
	12	76.5	84	96	108	114.5	-	20	56.5	64	76	88	94.5	-	19.5	5	24.2
	16	77.5	86	98	110	116	122	20	57.5	66	78	90	96	102	20	5	24.2

Bore size\Item	BA	C	CA	D	E	EA	EB	F	FA	J	JA	K	KA	L	LA	LB	P	PA	PB	R
6	10	14	7	3	M3×0.5	15	16	5.5	2.4	6.5	4	M4×0.7	7	3.3	8	10	M5×0.8	14	-	11
8	12	16	8	4	M4×0.7	15	16.5	7	2.2	6.5	4	M4×0.7	7	3.3	8	12	M5×0.8	15	5	14
10	12	16	8	4	M4×0.7	15	16.5	7	2.2	6.5	4	M4×0.7	7	3.3	8	12	M5×0.8	15.5	5	14
12	15	20	10	5	M5×0.8	15	16.5	8	4	8	5	M5×0.8	8	4.3	8	16	M5×0.8	15.5	5	17
16	18	20	10	6	M5×0.8	15	16.5	8	4	8	5	M5×0.8	8	4.3	8	16	M5×0.8	15.5	5	20

Remark: The dimensions of magnet type cylinder are the same as non-magnet type cylinder.
Only axial air intake type of back cover is available for Φ6mm bore size.

Accessories

Ordering code

F–PB 10 LB

Accessory ●
Model ●
Bore size ●
Accessory type ①

Mounting accessory	LB: LB type
	FA: FA type
	CJ: CJ type ②
Knuckle ③	I: I Knuckle
	Y: Y Knuckle

① Please refer to accessory list for selection and ordering information.
② CJ is attached with relevant PIN.
③ Please refer to page 379, 380 for others knuckle.

Accessory selection

Cylinder model / Accessories		PB		PSB, PTB		PBD, PBJ	
		Standard	With magnet	Standard	With magnet	Standard	With magnet
Mounting accessory	LB	●	●	●	●	●	●
	FA	●	●	●	●	●	●
	CJ	●	●	●	●	×	×
Knuckle ①	I	●	●	●	●	●	●
	Y	●	●	●	●	●	●
	F	●	●	●	●	●	●
	U	●	●	●	●	●	●
Sensor switch②	CS1–M	×	●	×	●	×	●
	DS1–M	×	●	×	●	×	●

① Please refer to P377~380 for knuckle detail,
② Please refer to P381~402 for detail of sensor switch.

Material of accessories

Accessories / Bore size	Mounting accessories			Knuckle			
	LB	FA	CJ	I	Y	F	U
4~16	△	△	△	□	□	□	□

△——SPCC, □——Carbon steel.

List for ordering code of accessories

Accessories / Bore size	Mounting accessory		
	LB	FA	CJ
4	-	-	-
6	F-PB6LB	F-PB6FA	-
10	F-PB10LB	F-PB10FA	F-PB10CJ
12	F-PB12LB	F-PB12FA	F-PB12CJ
16			F-PB16CJ

Accessories / Bore size	Knuckle			
	I: I Knuckle	Y: Y Knuckle	F: F Knuckle	U: U Knuckle
4	-	-	-	-
6	F-PB6I	F-PB6Y	F-M3X040F	-
10	F-PB10I	F-PB10Y	F-M4X070F	F-M4X070U
12	F-PB12I	F-PB12Y	F-M5X080F	F-M5X080U
16				

Accessories / Bore size	Sensor switch	
	CS1–M□	DS1–M□
4	-	-
6	CS1–M-S06	DS1–M-S06
10	CS1–M-S10	DS1–M-S10
12	CS1–M-S12	DS1–M-S12
16	CS1–M-S16	DS1–M-S16

Dimensions

LB

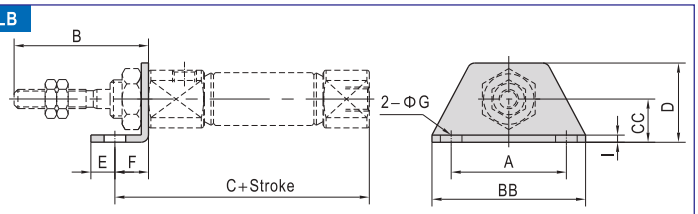

Bore size\Item	A	B	BB	C	CC	D	E	F	G	I
6	24	28	32	56.5	9	16.5	5	7	4.5	1.5
10	24	28	32	53	9	16.5	5	7	4.5	1.5
12	33	28	42	55	14	25	6	9	5.5	2.5
16	33	28	42	57	14	25	6	9	5.5	2.5

FA

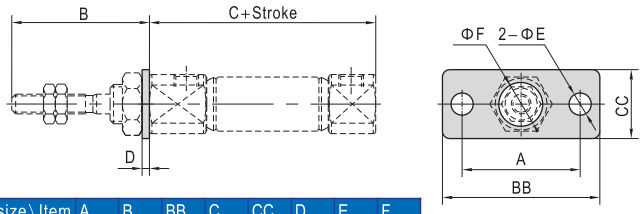

Bore size\Item	A	B	BB	C	CC	D	E	F
6	24	28	32	49.5	14	1.5	4.5	6.3
10	24	28	32	46	14	1.5	4.5	8.3
12	33	28	42	46	20	2.5	5.5	10.3
16	33	28	42	48	20	2.5	5.5	10.3

CJ

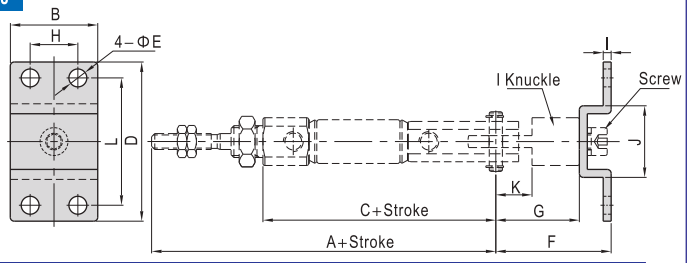

Bore size\Item	A	B	C	D	E	F	G	H	I	J	K	L
10	82	22	54	40	4.5	29	21	12	2	18	9.1	32
12	84	28	56	48	5.5	35	25	16	2.5	20.4	14.1	38
16	86	28	58	48	5.5	35	25	16	2.5	20.4	14.1	38

Note) CJ type accessories need to be matched with I joint and I joint has to be ordered individually.

I Knuckle

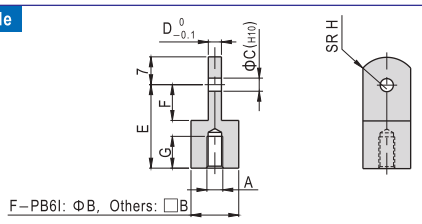

Type\Item	A	B	C	D	E	F	G	H
F-PB6I	M3×0.5	6	3	3	12	5	5	5
F-PB10I	M4×0.7	12	3.3	3	21	9.1	7.5	8
F-PB12I	M5×0.8	12	5	6.3	25	14.1	7.5	12

Y Knuckle

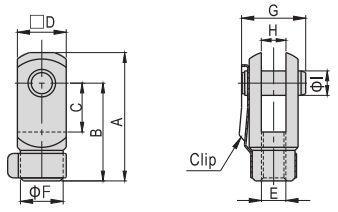

Type\Item	A	B	C	D	E	F	G	H	I
F-PB6Y	15.5	12	5	6	M3×0.5	6	9	3	3
F-PB10Y	28	21	10.2	12	M4×0.7	10	15.5	3.2	3.3
F-PB12Y	28	21	10.2	12	M5×0.8	10	15.5	6.5	5

In accordance with ISO21287 standard

Product series

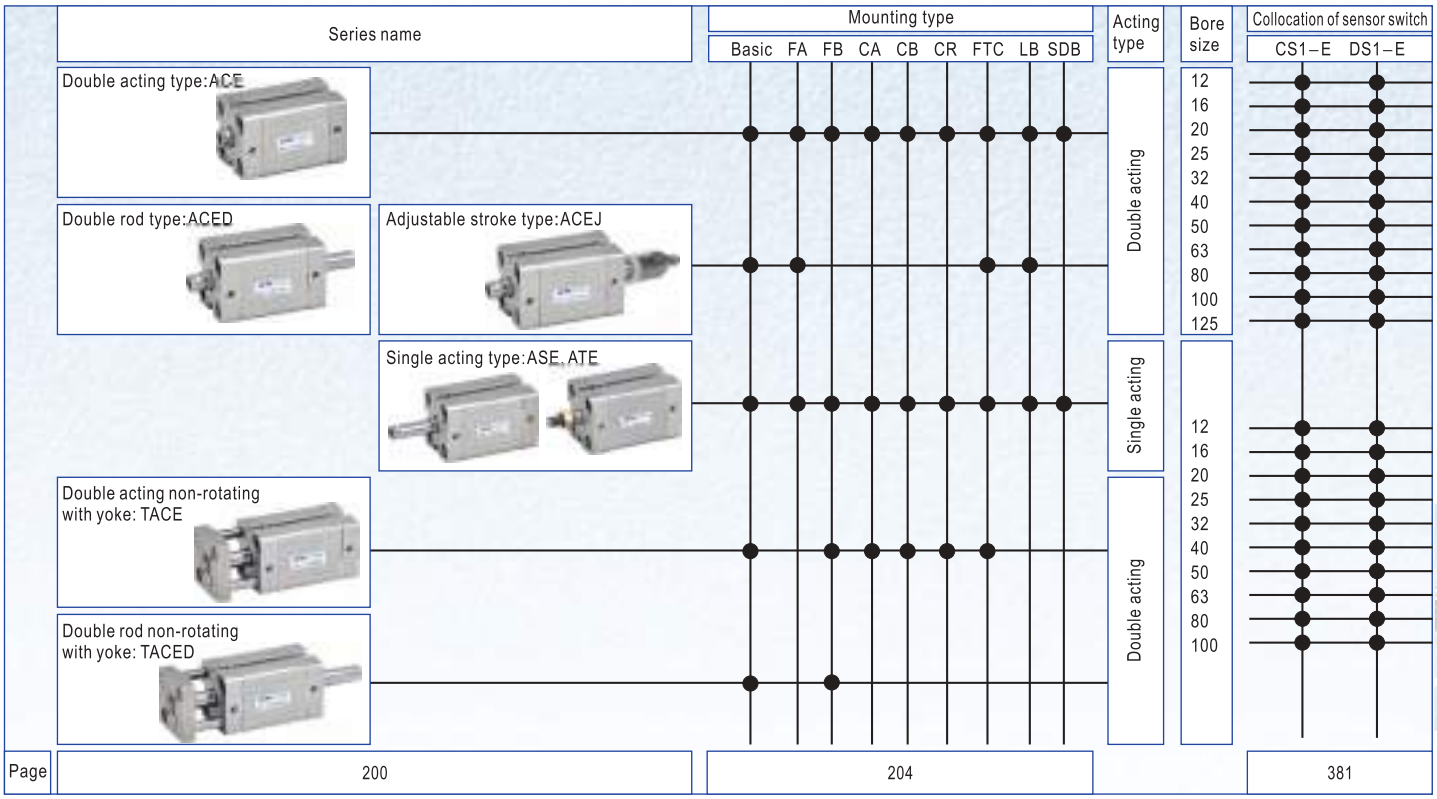

ACE

Installation and application

1. When load changes in the work, the cylinder with abundant output capacity shall be selected.
2. Relative cylinder with high temperature resistance or corrosion resistance shall be chosen under the condition of high temperature or corrosion.
3. Necessary protection measure shall be taken in the environment with higher humidity, much dust or water drops, oil dust and welding dregs.
4. Dirty substances in the pipe must be eliminated before cylinder is connected with pipeline to prevent the entrance of particles into the cylinder.
5. The medium used by cylinder shall be filtered to 40 μ m or below.
6. As both of the front cover and piston of the cylinder are short, typically too large stroke can not be selected.
7. Anti-freezing measure shall be adopted under low temperature environment to prevent moisture freezing.
8. The cylinder shall avoid the influence of side load in operation to maintain the normal work of cylinder and extend the service life.
9. If the cylinder is dismantled and stored for a long time, please conduct anti-rust treatment to the surface. Anti-dust caps shall be added in air inlet and outlet ports. The front and back cover can not be dismantled, which shall be especially noticed.

Criteria for selection: Cylinder thrust

Unit：Newton(N)

Bore size (mm)	Rod size (mm)	Acting type		Pressure area (mm^2)	Operating pressure(MPa) 0.1	0.2	0.3	0.4	0.5	0.6	0.7
12	6	Single acting	Push side	113.1	-	6.1	17.4	28.7	40.0	51.4	62.7
			Pull side	84.8	-	0.5	8.9	17.4	25.9	34.4	42.9
		Double acting	Push side	113.1	11.3	22.6	33.9	45.2	56.5	67.9	79.2
			Pull side	84.8	8.5	17.0	25.4	33.9	42.4	50.9	59.4
16	8	Single acting	Push side	201.1	-	18.1	38.2	58.3	78.4	98.5	118.6
			Pull side	150.8	-	8.1	23.1	38.2	53.3	68.4	83.5
		Double acting	Push side	201.1	20.1	40.2	60.3	80.4	100.5	120.6	140.7
			Pull side	150.8	15.1	30.2	45.2	60.3	75.4	90.5	105.6
20	10	Single acting	Push side	314.2	-	33.1	64.5	96.0	127.4	158.8	190.2
			Pull side	235.6	-	17.4	41.0	64.5	88.1	111.7	135.2
		Double acting	Push side	314.2	31.4	62.8	94.2	125.7	157.1	188.5	219.9
			Pull side	235.6	23.6	47.1	70.7	94.2	117.8	141.4	164.9
25	10	Single acting	Push side	490.9	13.8	62.9	112.0	161.0	210.1	259.2	308.3
			Pull side	412.3	5.9	47.2	88.4	129.6	170.9	212.1	253.3
		Double acting	Push side	490.9	49.1	98.2	147.3	196.3	245.4	294.5	343.6
			Pull side	412.3	41.2	82.5	123.7	164.9	206.2	247.4	288.6
32	12	Single acting	Push side	804.2	30.8	111.2	191.7	272.1	352.5	432.9	513.4
			Pull side	691.2	19.5	88.6	157.7	226.9	296.0	365.1	434.2
		Double acting	Push side	804.2	80.4	160.8	241.3	321.7	402.1	482.5	563.0
			Pull side	691.2	69.1	138.2	270.3	276.5	345.6	414.7	483.8

Bore size (mm)	Rod size (mm)	Acting type		Pressure area (mm^2)	Operating pressure(MPa) 0.1	0.2	0.3	0.4	0.5	0.6	0.7
40	12	Single acting	Push side	1256.6	54.2	179.8	305.5	431.2	556.8	682.5	808.1
			Pull side	1143.5	42.9	157.2	271.6	385.9	500.3	614.6	729.0
		Double acting	Push side	1256.6	125.7	251.3	377.0	502.7	628.3	754.0	879.6
			Pull side	1143.5	114.4	228.7	343.1	457.4	571.8	686.1	800.5
50	16	Single acting	Push side	1963.5	90.1	286.5	482.8	679.2	875.5	1071.9	1268.2
			Pull side	1762.4	70.0	246.3	422.5	598.8	775.0	951.3	1127.5
		Double acting	Push side	1963.5	196.3	392.7	589.0	785.4	981.7	1178.1	1374.4
			Pull side	1762.4	176.2	352.5	528.7	705.0	881.2	1057.5	1233.7
63	16	Single acting	Push side	3117.2	173.6	485.3	797.1	1108.8	1420.5	1732.2	2044.0
			Pull side	2916.2	153.5	445.1	736.8	1028.4	1320.0	1611.6	1903.2
		Double acting	Push side	3117.2	311.7	623.4	935.2	1246.9	1558.6	1870.3	2182.1
			Pull side	2916.2	291.6	583.2	874.9	1166.5	1458.1	1749.7	2041.3
80	20	Single acting	Push side	5026.5	305.6	808.2	1310.9	1813.5	2316.2	2818.8	3321.5
			Pull side	4712.4	274.1	745.4	1216.6	1687.9	2159.1	2630.3	3101.6
		Double acting	Push side	5026.5	502.7	1005.3	1508.0	2010.6	2513.3	3015.9	3518.6
			Pull side	4712.4	471.2	942.5	1413.7	1885.0	2356.2	2827.4	3298.7
100	20	Single acting	Push side	7854.0	499.1	1284.5	2069.9	2855.3	3640.7	4426.1	5211.5
			Pull side	7539.8	467.7	1221.7	1975.7	2729.6	3483.6	4237.6	4991.6
		Double acting	Push side	7854.0	785.4	1570.8	2356.2	3141.6	3927.0	4712.4	5497.8
			Pull side	7539.8	754.0	1508.0	2262.0	3015.9	3769.9	4523.9	5277.9
125	25	Double acting	Push side	12271.8	1227.2	2454.4	3681.5	4908.7	6135.9	7363.1	8590.3
			Pull side	11780.9	1178.1	2356.2	3534.3	4712.4	5890.5	7086.5	8246.6

Specification

Bore size(mm)		12	16	20	25	32	40	50	63	80	100	125
Acting type		Double acting										
		Single acting-Push type, Single acting-Pull type										–
Fluid		Air(to be filtered by 40 μ m filter element)										
Operating pressure	Double acting	0.1~1.0MPa(14~145psi)										
	Single acting	0.2~1.0MPa(28~145psi)										
Proof pressure		1.5MPa(215psi)										
Temperature ℃		-20~80										
Speed range mm/s		Double acting: 30~500 Single acting: 50~500										
Stroke tolerance		Stroke≤100 $^{+1.0}_{0}$ Stroke>100 $^{+1.5}_{0}$										
Cushion type		Bumper										
Port size ①		M5×0.8				G1/8						G1/4

① G thread and NPT thread are available. Add) Refer to P381~402 for detail of sensor switch.

Stroke

Bore size (mm)			Standard stroke (mm)	Max. std stroke
Common type	Double acting	12	5 10 15 20 25 30 35 40 45 50	50
		16	5 10 15 20 25 30 35 40 45 50 55 60 70 75	75
		20	5 10 15 20 25 30 35 40 45 50 55 60 70 75 80 90 100	100
		25	5 10 15 20 25 30 35 40 45 50 55 60 70 75 80 90 100 110 120 125 150	150
		32 40	5 10 15 20 25 30 35 40 45 50 55 60 70 75 80 90 100 110 120 125 150 160 175 200	200
		50 63	5 10 15 20 25 30 35 40 45 50 55 60 70 75 80 90 100 110 120 125 150 160 175 200 225 250	250
		80 100 125	5 10 15 20 25 30 35 40 45 50 55 60 70 75 80 90 100 110 120 125 150 160 175 200 225 250 275 300	300
	Single acting	12	5 10	10
		16~100	5 10 15 20 25	25
Non-rotating with yoke	Double acting	12	5 10 15 20 25 30 35 40 45 50	50
		16	5 10 15 20 25 30 35 40 45 50 55 60 70 75	75
		20 25	5 10 15 20 25 30 35 40 45 50 55 60 70 75 80 90 100	100
		32 40	5 10 15 20 25 30 35 40 45 50 55 60 70 75 80 90 100	100
		50 63	5 10 15 20 25 30 35 40 45 50 55 60 70 75 80 90 100	100
		80 100	5 10 15 20 25 30 35 40 45 50 55 60 70 75 80 90 100	100

Note) 1. Please contact the company for other special strokes.
2. The dimensions of non-std stroke cylinder has the same dimensions as the next longer stroke std. stroke cylinder. e.g. 23mm stroke cylinder has the same dimensions of 25 std. stroke cylinder.

Symbol

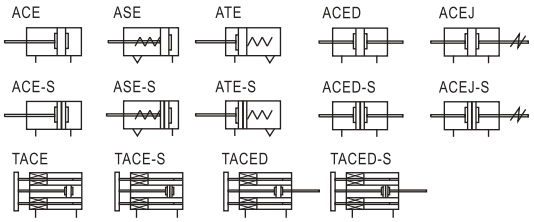

ACE

Product feature

1. In accordance with ISO21287 standard, the mounting size is vogue.
2. The cylinder body connects with the threads of the front and back cover, forming high strength and convenient maintenance.
3. The internal diameter of the body is treated with rolling followed by the treatment of hard anodizing, forming an excellent abrasion resistance and durability.
4. The seal of piston adopts heterogeneous two-way seal structure. It has compact dimension and the function of oil reservation.
5. Compact structure can effectively save fifty percent installation space with ISO15552 standard cylinder.
6. There are magnetic switch slots around the cylinder body, which is convenient to install inducting switch.
7. Bumper is available and it can availably absorb excrescent energy.
8. Installing accessorirs with various specifications are optional.

Ordering code

ACE 20×30 S B □ G

ACED 20×30 S B □ G

ACEJ 20×30–30 S B □ G

Model

ACE: Compact cylinder(Double acting)
ASE: Compact cylinder (Single acting-push)
ATE: Compact cylinder (Single acting-pull)
ACED: Compact cylinder(Double rod)
ACEJ: Compact cylinder (Adjustable stroke)
TACE: Compact cylinder (Double acting non-rotating with yoke)
TACED: Compact cylinder (Double rod non-rotating with yoke)

Bore size

Model	Bore size
ACE ACED/ACEJ	12 16 20 25 32 40 50 63 80 100 125
ASE/ATE TACE/TACED	12 16 20 25 32 40 50 63 80 100

Stroke

Refer to stroke table for details

Adjustable stroke

Model	Adjustable stroke
ACEJ	10: 10mm
	20: 20mm
	30: 30mm
	40: 40mm
	50: 50mm
	75: 75mm
	100: 100mm
Others	No this code

Thread type ①

G: G
T: NPT

Mounting type ②

Model	Mounting type
All model	Blank: No accessories
ACE ASE ATE	FA: FA type
	FB: FB type
	CA: CB type
	CB: CB type
	CR: CR type
	FTC: FTC type
	LB: LB type
	SDB: SDB type
ACED ACEJ	FA: FA type
	FTC: FTC type
	LB: LB type
TACE	FB: FB type
	CA: CB type
	CB: CB type
	CR: CR type
	FTC: FTC type
TACED	FB: FB type

Rod type

Model	Rod type
ACE/ASE/ATE ACED/ACEJ	Blank: Female thread
	B: Male thread
TACE/TACED	No this code

Magnet

Blank: Without magnet
S: With magnet

① Standard thread is blank here.
② Please refer to page 204 for accessory parts; CR must be used with CA,FTC must be used with TCM2.

Inner structure and material of major parts

ACE-S

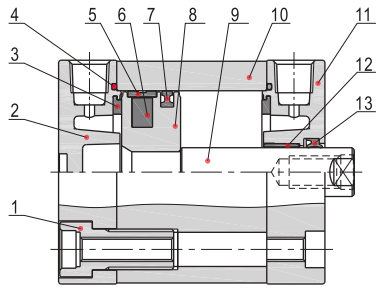

TACE-S

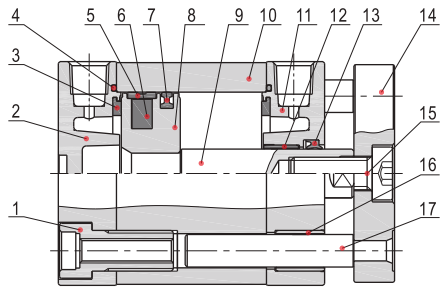

NO.	Item	Material
1	Screw	Carbon steel
2	Back cover	Aluminum alloy
3	Bumper	TPU
4	O-ring	NBR
5	Wear ring	No(Φ12~20)\Wear resistant material(Others)
6	Magnet	Sintered metal(Neodymium-iron-boron)(Φ12~20)
		Plastic(Others)
7	Piston seal	NBR
8	Piston	Aluminum alloy
9	Piston rod	S45C
10	Body	Aluminum alloy
11	Front cover	Aluminum alloy
12	Bushing	No(Φ12~25)\Wear resistant material(Others)
13	Front cover packing	NBR
14	Panal	Aluminum alloy
15	Screw	Carbon steel
16	Bushing	Wear resistant material
17	Guide rod	Stainless steel(Φ12~40)\S45C(Others)

Dimensions

ACE

Φ12

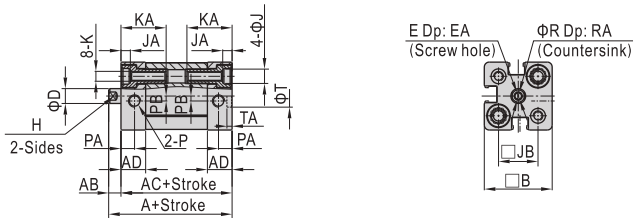

Φ16~Φ25

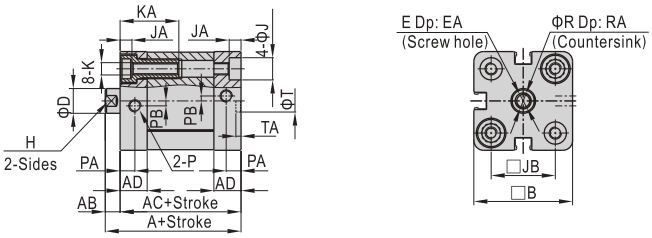

Φ32~Φ63

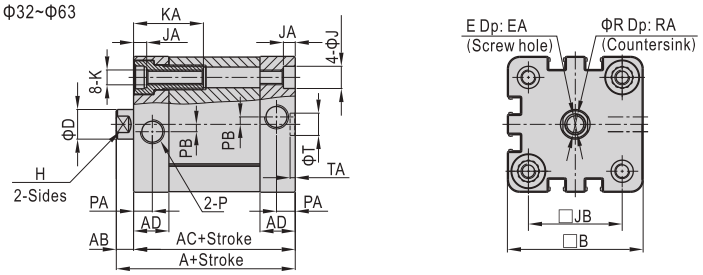

Φ80~Φ125

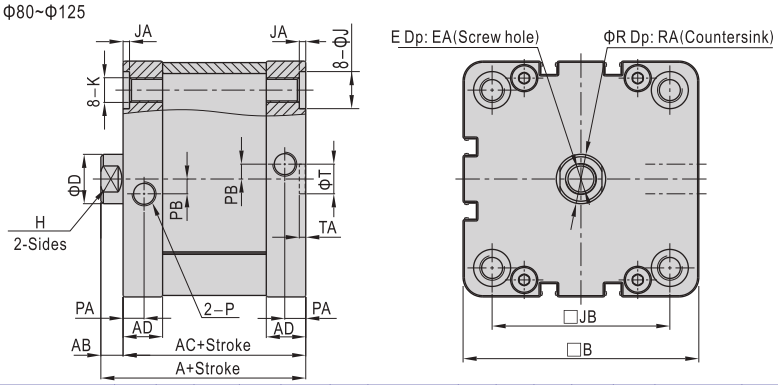

Bore size\Item	A	AB	AC	AD	B	D	E	EA	H	J	JA	JB	K	KA
12	40	5	35	10	27.5	6	M3×0.5	8	5	6	3.5	16	M4×0.7	18.5
16	40	5	35	10	30	8	M4×0.7	10	7	6	3.5	18	M4×0.7	18.5
20	43	6	37	10.5	35.5	10	M6×1.0	14	9	9	4.5	22	M5×0.8	23.5
25	45	6	39	11	40	10	M6×1.0	14	9	9	4.5	26	M5×0.8	23.5
32	51	7	44	14	49.5	12	M8×1.25	16	10	9	4.5	32.5	M6×1.0	28.5
40	52.5	7	45.5	14.5	55	12	M8×1.25	16	10	9	4.5	38	M6×1.0	28.5
50	53.5	8	45.5	14.5	65.5	16	M10×1.5	20	13	11	4.5	46.5	M8×1.25	30.5
63	57	8	49	15	75.5	16	M10×1.5	20	13	11	4.5	56.5	M8×1.25	30.5
80	63	9	54	16	95.5	20	M12×1.75	20	17	15	2.5	72	M10×1.5	–
100	76	9	67	19	113.5	20	M12×1.75	20	17	15	2.5	89	M10×1.5	–
125	92	11	81	20	134.5	25	M16×2.0	25	21	–	–	110	M12×1.75	–

Bore size\Item	P	PA	PB	R	RA	T	TA
12	M5×0.8	5.5	2	3.5	1.5	9	2.1
16	M5×0.8	5.5	2	4.5	1.5	9	2.1
20	M5×0.8	6	2	6.5	2.5	9	2.1
25	M5×0.8	6	2	6.5	2.5	9	2.1
32	G1/8	7.5	3	8.5	3.5	9	2.1
40	G1/8	7.5	3	8.5	3.5	9	2.1
50	G1/8	7.5	3	10.5	4.5	12	2.6
63	G1/8	7.5	4	10.5	4.5	12	2.6
80	G1/8	8.5	6	12.5	6	12	2.6
100	G1/8	10.5	7	12.5	6	12	2.6
125	G1/4	10.5	8	16.5	7	12	2.6

Remark: The dimensions of magnet type cylinder are the same as non-magnet type cylinder.
Please refer to page 203 for male thread dimensions.

ASE

Φ12

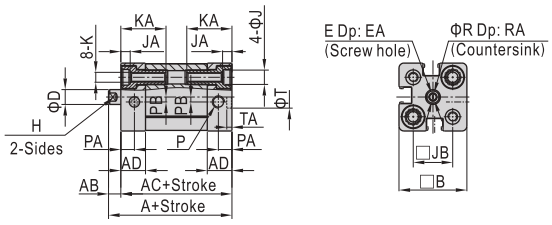

Φ16~Φ25

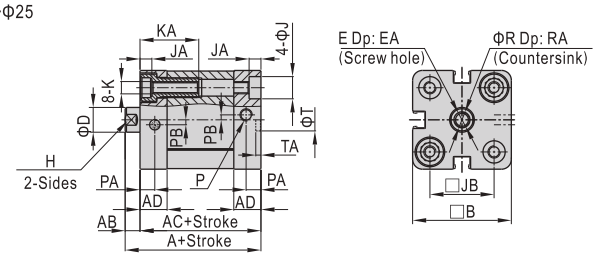

Φ32~Φ63

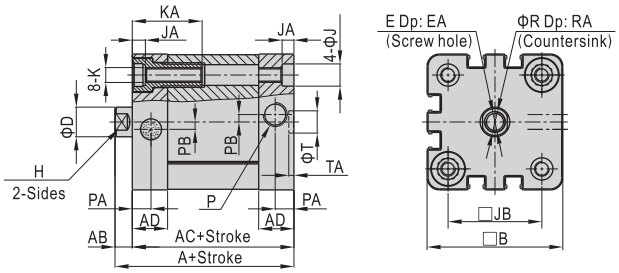

Φ80/Φ100

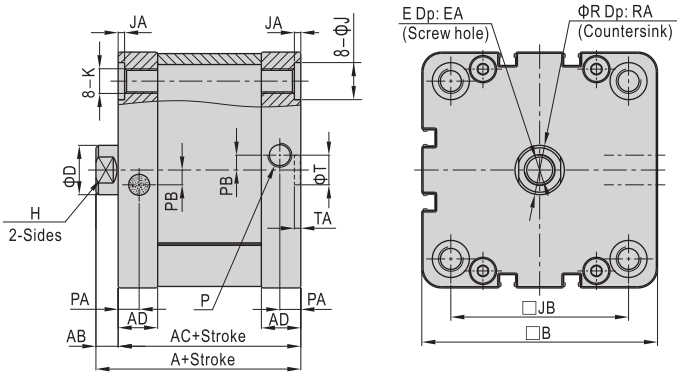

Bore size\Item	A	AB	AC	AD	B	D	E	EA	H	J	JA	JB
12	40	5	35	10	27.5	6	M3 × 0.5	8	5	6	3.5	16
16	40	5	35	10	30	8	M4 × 0.7	10	7	6	3.5	18
20	43	6	37	10.5	35.5	10	M6 × 1.0	14	9	9	4.5	22
25	45	6	39	11	40	10	M6 × 1.0	14	9	9	4.5	26
32	51	7	44	14	49.5	12	M8 × 1.25	16	10	9	4.5	32.5
40	52.5	7	45.5	14.5	55	12	M8 × 1.25	16	10	9	4.5	38
50	53.5	8	45.5	14.5	65.5	16	M10 × 1.5	20	13	11	4.5	46.5
63	57	8	49	15	75.5	16	M10 × 1.5	20	13	11	4.5	56.5
80	63	9	54	16	95.5	20	M12 × 1.75	20	17	15	2.5	72
100	76	9	67	19	113.5	20	M12 × 1.75	20	17	15	2.5	89

Bore size\Item	K	KA	P	PA	PB	R	RA	T	TA
12	M4 × 0.7	18.5	M5 × 0.8	5.5	2	3.5	1.5	9	2.1
16	M4 × 0.7	18.5	M5 × 0.8	5.5	2	4.5	1.5	9	2.1
20	M5 × 0.8	23.5	M5 × 0.8	6	2	6.5	2.5	9	2.1
25	M5 × 0.8	23.5	M5 × 0.8	6	2	6.5	2.5	9	2.1
32	M6 × 1.0	28.5	G1/8	7.5	3	8.5	3.5	9	2.1
40	M6 × 1.0	28.5	G1/8	7.5	3	8.5	3.5	9	2.1
50	M8 × 1.25	30.5	G1/8	7.5	3	10.5	4.5	12	2.6
63	M8 × 1.25	30.5	G1/8	7.5	4	10.5	4.5	12	2.6
80	M10 × 1.5	–	G1/8	8.5	6	12.5	6	12	2.6
100	M10 × 1.5	–	G1/8	10.5	7	12.5	6	12	2.6

Remark: The dimensions of magnet type cylinder are the same as non–magnet type cylinder.
Please refer to page 203 for male thread dimensions.

ATE

Φ12

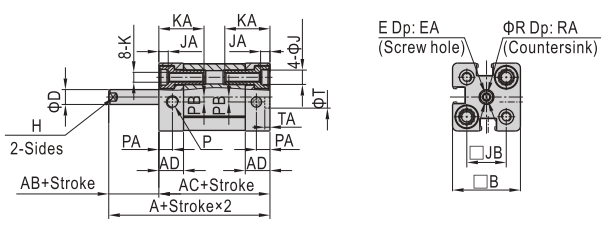

Φ16~Φ25

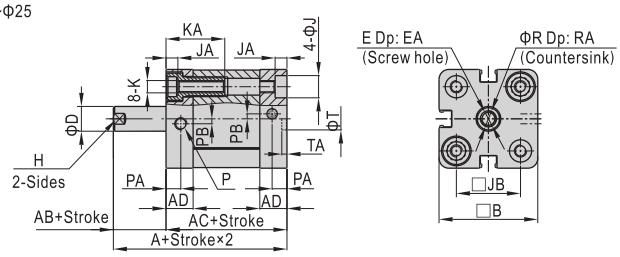

Φ32~Φ63

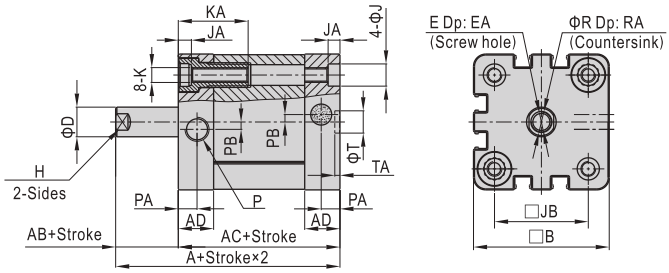

Φ80/Φ100

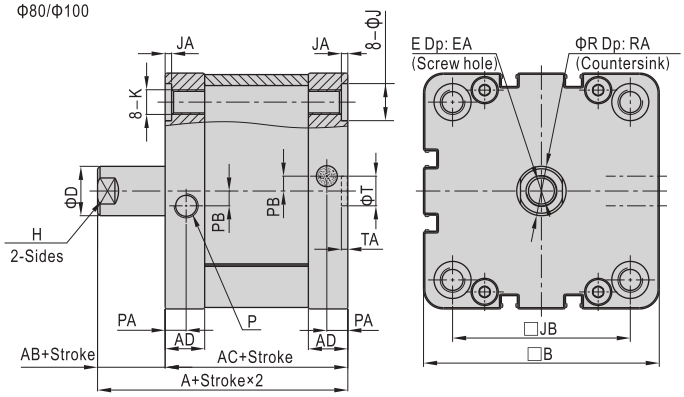

Bore size\Item	A	AB	AC	AD	B	D	E	EA	H	J	JA	JB
12	40	5	35	10	27.5	6	M3 × 0.5	8	5	6	3.5	16
16	40	5	35	10	30	8	M4 × 0.7	10	7	6	3.5	18
20	43	6	37	10.5	35.5	10	M6 × 1.0	14	9	9	4.5	22
25	45	6	39	11	40	10	M6 × 1.0	14	9	9	4.5	26
32	51	7	44	14	49.5	12	M8 × 1.25	16	10	9	4.5	32.5
40	52.5	7	45.5	14.5	55	12	M8 × 1.25	16	10	9	4.5	38
50	53.5	8	45.5	14.5	65.5	16	M10 × 1.5	20	13	11	4.5	46.5
63	57	8	49	15	75.5	16	M10 × 1.5	20	13	11	4.5	56.5
80	63	9	54	16	95.5	20	M12 × 1.75	20	17	15	2.5	72
100	76	9	67	19	113.5	20	M12 × 1.75	20	17	15	2.5	89

Bore size\Item	K	KA	P	PA	PB	R	RA	T	TA
12	M4 × 0.7	18.5	M5 × 0.8	5.5	2	3.5	1.5	9	2.1
16	M4 × 0.7	18.5	M5 × 0.8	5.5	2	4.5	1.5	9	2.1
20	M5 × 0.8	23.5	M5 × 0.8	6	2	6.5	2.5	9	2.1
25	M5 × 0.8	23.5	M5 × 0.8	6	2	6.5	2.5	9	2.1
32	M6 × 1.0	28.5	G1/8	7.5	3	8.5	3.5	9	2.1
40	M6 × 1.0	28.5	G1/8	7.5	3	8.5	3.5	9	2.1
50	M8 × 1.25	30.5	G1/8	7.5	3	10.5	4.5	12	2.6
63	M8 × 1.25	30.5	G1/8	7.5	4	10.5	4.5	12	2.6
80	M10 × 1.5	–	G1/8	8.5	6	12.5	6	12	2.6
100	M10 × 1.5	–	G1/8	10.5	7	12.5	6	12	2.6

Remark: The dimensions of magnet type cylinder are the same as non–magnet type cylinder.
Please refer to page 203 for male thread dimensions.

Male thread

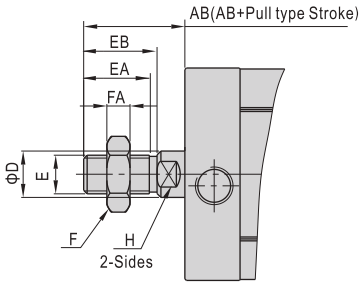

Bore size\Item	AB	D	E	EA	EB	F	FA	H
12	15	6	M5 × 0.8	9	10	8	4	5
16	17	8	M6 × 1.0	11	12	10	5	7
20	22	10	M8 × 1.25	15	16	12	6	9
25	22	10	M8 × 1.25	15	16	12	6	9
32	26	12	M10 × 1.25	17	19	17	6	10
40	26	12	M10 × 1.25	17	19	17	6	10
50	30	16	M12 × 1.25	20	22	17	7	13
63	30	16	M12 × 1.25	20	22	17	7	13
80	37	20	M16 × 1.5	26	28	23	8	17
100	37	20	M16 × 1.5	26	28	23	8	17
125	51	25	M20 × 1.5	38	40	26	10	21

ACED

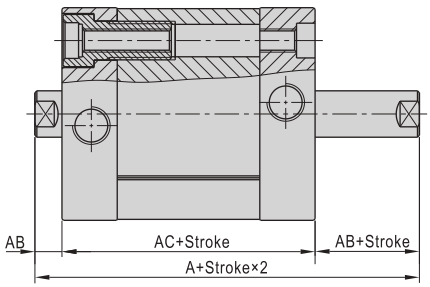

ACEJ

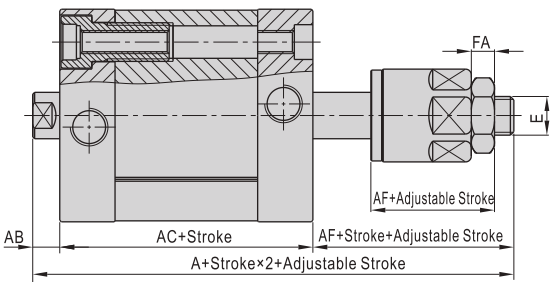

Bore size\Item	A(ACED)	A(ACEJ)	AB	AC	AF	FA	E
12	45	57	5	35	17	4	M5 × 0.8
16	45	61	5	35	21	5	M6 × 1.0
20	49	68	6	37	25	6	M8 × 1.25
25	51	70	6	39	25	6	M8 × 1.25
32	58	78	7	44	27	6	M10 × 1.25
40	59.5	79.5	7	45.5	27	6	M10 × 1.25
50	61.5	81.5	8	45.5	28	7	M12 × 1.25
63	65	85	8	49	28	7	M12 × 1.25
80	72	92	9	54	29	8	M16 × 1.5
100	85	105	9	67	29	8	M16 × 1.5
125	103	127.5	11	81	35.5	10	M20 × 1.5

Remark:
1. The unmarked dimension is the same as ACE standard type
2. The dimensions of magnet type cylinder are the same as non–magnet type cylinder.

TACE

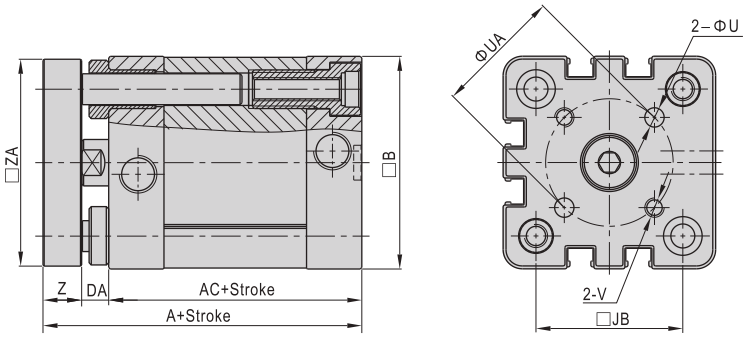

TACED

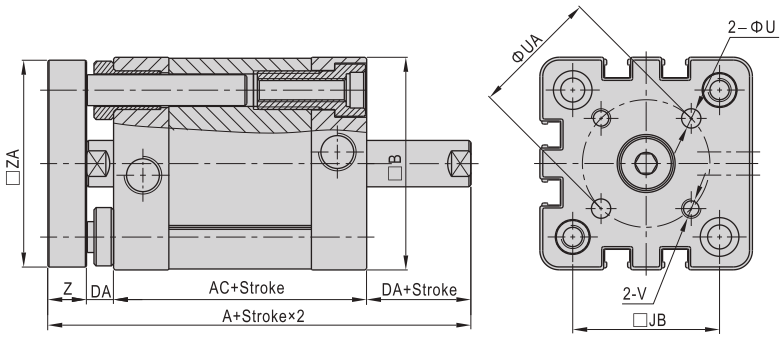

Bore size\Item	A(TACE)	A(TACED)	AC	B	DA	JB	U	UA	V	Z	ZA
12	46	51	35	27.5	5	16	3	12	M3 × 0.5	6	26.5
16	46	51	35	30	5	18	3	14	M3 × 0.5	6	29
20	51	57	37	35.5	6	22	4	17	M4 × 0.7	8	34.5
25	53	59	39	40	6	26	5	22	M5 × 0.8	8	39
32	61	68	44	49.5	7	32.5	5	28	M5 × 0.8	10	48
40	62.5	69.5	45.5	55	7	38	5	33	M5 × 0.8	10	53.5
50	65.5	73.5	45.5	65.5	8	46.5	6	42	M6 × 1.0	12	64
63	69	77	49	75.5	8	56.5	6	50	M6 × 1.0	12	74
80	77	86	54	95.5	9	72	8	65	M8 × 1.25	14	94
100	90	99	67	113.5	9	89	10	80	M10 × 1.5	14	112

Remark:
1. The unmarked dimension is the same as ACE standard type
2. The dimensions of magnet type cylinder are the same as non–magnet type cylinder.

Accessories

Ordering code

F-ACE 50 LB

- Accessory
- Model
- Bore size
- Accessory type ①

Mounting accessory	
	FA: FA type
	FB: FB type
	CA: CA type
	LB: LB type
	SDB: SDB type

① The listed accessories are for ACE cylinder. Accessories that are adaptable to other cylinders are not shown. Please refer to accessory list on P206 for selection and ordering information.

Accessory selection

Accessories / Cylinder model	Mounting accessory								
	LB	FA	FB	CA	CB	CR	SDB	FTC	TCM2
ACE	●	●	●	●	●	●	●	●	●
ASE/ATE	●	●	●	●	●	●	●	●	●
ACED/ACEJ	●	●	×	×	×	×	×	●	●
TACE	×	×	●	●	●	●	●	●	●
TACED	×	×	●	×	×	×	×	×	×

Accessories / Cylinder model			Knuckle ①				Sensor switch②	
			I	Y	F	U	CS1-E	DS1-E
ACE	Female thread	Standard	×	×	×	×	×	×
		With magnet	×	×	×	×	●	●
	Male thread	Standard	●	●	●	●	×	×
		With magnet	●	●	●	●	●	●
ASE ATE	Female thread	Standard	×	×	×	×	×	×
		With magnet	×	×	×	×	●	●
	Male thread	Standard	●	●	●	●	×	×
		With magnet	●	●	●	●	●	●
ACED ACEJ	Female thread	Standard	×	×	×	×	×	×
		With magnet	×	×	×	×	●	●
	Male thread	Standard	●	●	●	●	×	×
		With magnet	●	●	●	●	●	●
TACE TACED	Female thread	Standard	×	×	×	×	×	×
		With magnet	×	×	×	×	●	●

①The I knuckle and Y knuckle for bore Φ12 are adaptable to ACQ cylinders, and other knuckles are common parts. Please refer to P377~380 for knuckle detail.
② Please refer to P381~402 for detail of sensor switch.

Material of accessories

Accessoriies / Bore size	Mounting accessory									Knuckle			
	LB	FA	FB	CA	CB	CR	SDB	FTC	TCM2	I	Y	F	U
12~25	△	●	●	●	–	–	△	■	●	□	□	□	□
32~100	△	●	●	◇	◇	◇	–	■	●	□	□	□	□
125	–	◇	◇	◇	◇	◇	–	■	●	□	□	□	□

●——Aluminum alloy; ■——Cast iron;
◇——Ductile Iron; △——SPCC; □——Carbon Steel;

Dimensions

LB

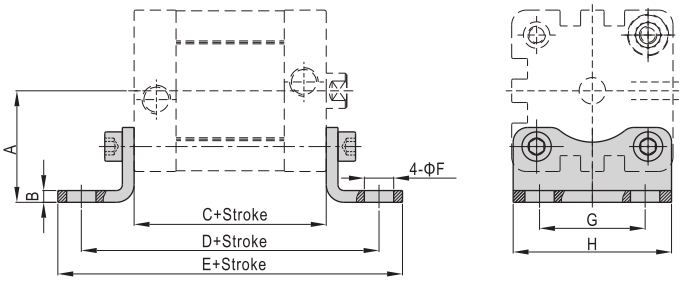

Bore size\Item	A	B	C	D	E	F	G	H
12	21	3	35	61	71	5.5	16	25
16	22	3	35	61	70.6	5.5	18	27
20	27	3.8	37	69	81.6	6.5	22	34
25	29	3.8	39	71	83.6	6.5	26	38
32	33.5	4	44	76	89	7	32	48
40	38	4	45.5	81.5	97.5	10	36	54
50	45	5	45.5	87.5	103.5	10	45	65
63	50	5	49	91	107	10	50	75
80	63	6	54	106	127	12	63	95
100	74	6	67	121	146	14.5	75	112

Note) Valve C in the above table is only for ACE series. Please refer to relevant content for valve C of other series.

FA\FB

Φ12~Φ25

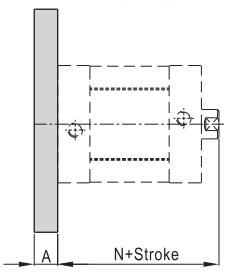

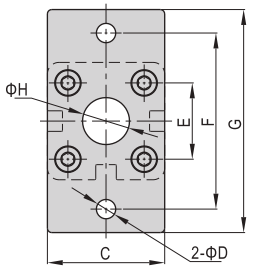

Φ32~Φ125

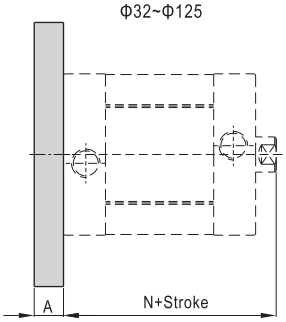

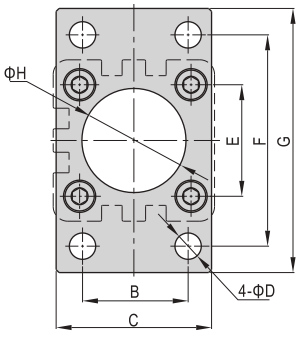

Bore size\Item	A	B	C	D	E	F	G	H	N
12	8	-	25	5.5	16	40	55	10	40
16	8	-	30	5.5	18	43	55	10	40
20	8	-	35	6.6	22	55	68	16	43
25	8	-	39.5	6.6	26	60	76	16	45
32	10	32	47	7	32.5	64	80	30.5	51
40	10	36	53	9	38	72	90	35.5	52.5
50	12	45	65	9	46.5	90	108	40.5	53.5
63	12	50	75	9	56.5	100	118	45.5	57
80	16	63	95	12.5	72	126	150	45.5	63
100	16	75	115	14.5	89	150	176	55.5	76
125	20	90	139	16.5	110	180	218	60.5	92

CA

Φ12~Φ25

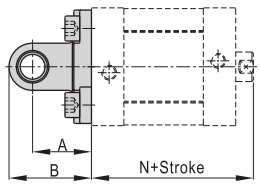

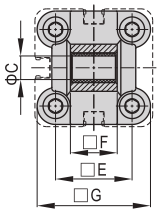

Φ32~Φ125

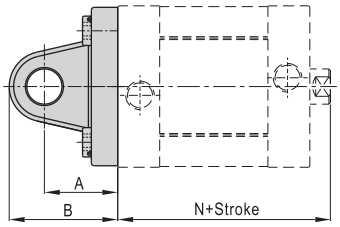

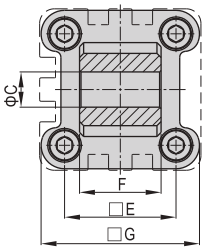

Bore size\Item	A	B	C	E	F	G	N
12	16	22	6	16	11.9	24	40
16	16	22	6	18	11.9	28.5	40
20	20	28	8	22	15.9	34.5	43
25	20	28	8	26	15.9	38.5	45
32	22	32.5	10	32.5	25.8	46.5	51
40	25	37	12	38	27.8	54	52.5
50	27	39	12	46.5	31.7	64	53.5
63	32	47	16	56.5	39.7	75	57
80	36	51.5	16	72	49.7	93	63
100	41	61	20	89	59.7	110	76
125	50	74	25	110	69.7	134	92

SDB

Φ12~Φ25

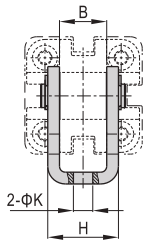

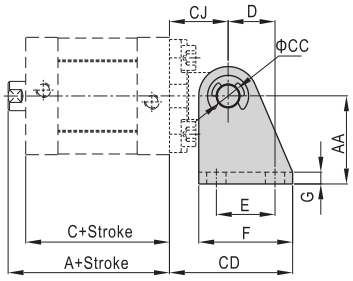

Bore size\Item	A	AA	B	C	CC	CD	CJ	D	E	F	G	H	K
12	40	27	12.1	35	6	34	16	13	15	25	3	18.1	5.5
16	40	27	12.1	35	6	34	16	13	15	25	3	18.1	5.5
20	43	30	16.1	37	8	42	20	16	20	32	4	24.1	6.6
25	45	30	16.1	39	8	42	20	16	20	32	4	24.1	6.6

Note) SDB cann't be used alone, it must be used with CA.

CB

Φ32~Φ125

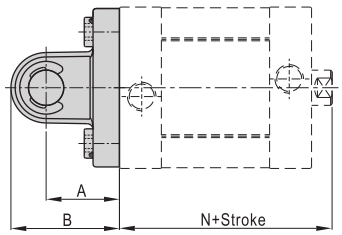

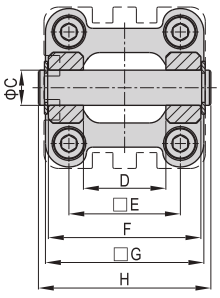

Bore size\Item	A	B	C	D	E	F	G	H	N
32	22	32.5	10	26	32.5	45	46.5	51	51
40	25	37	12	28	38	52	54	59	52.5
50	27	39	12	32	46.5	60	64	67	53.5
63	32	47	16	40	56.5	70	75	77	57
80	36	51.5	16	50	72	90	93	97	63
100	41	61	20	60	89	110	110	119	76
125	50	74	25	70	110	130	134	139	92

CR

Φ32~Φ125

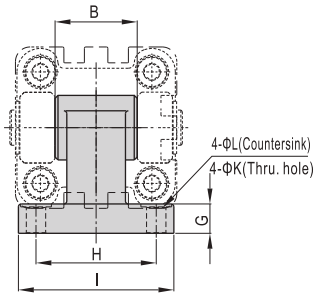

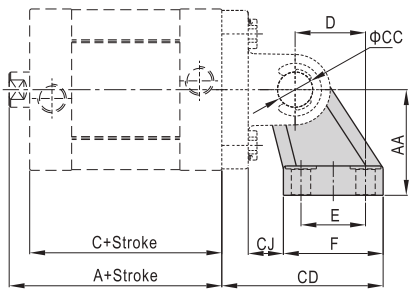

Bore size\Item	A	AA	B	C	CC	CD	CJ	D	E	F	G	H	I	K	L
32	51	32	26	44	10	50	10	21	18	31	8	38	51	6.6	11
40	52.5	36	28	45.5	12	56	12	24	22	35	10	41	54	6.6	11
50	53.5	45	32	45.5	12	68	13	33	30	45	12	50	65	9	14
63	57	50	40	49	16	77	17	37	35	50	12	52	67	9	14
80	63	63	50	54	16	93	19	47	40	60	14	66	86	11	17
100	76	71	60	67	20	106	22	55	50	70	15	76	96	11	17
125	92	90	70	81	25	135	26	70	60	90	20	94	124	14	20

Note) CR cann't be used alone, it must be used with CB.

Accessories

FTC

Φ32~Φ125

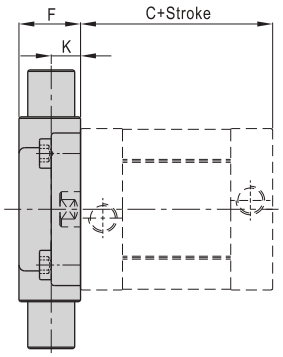

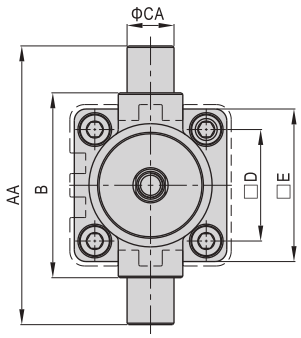

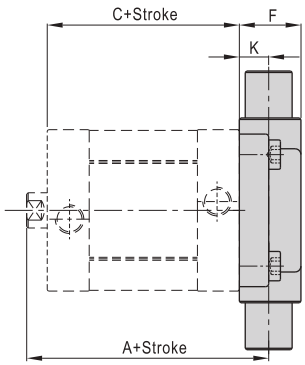

Bore size\Item	A	AA	B	C	CA
32	63	74	50	44	12
40	66.5	95	63	45.5	16
50	71.5	107	75	45.5	16
63	77	130	90	49	20
80	85	150	110	54	20
100	102	185	132	67	25
125	124	210	160	81	25

Bore size\Item	D	E	F	K
32	32.5	46	19	10
40	38	52	21	10
50	46.5	64	26	12
63	56.5	74	28	12
80	72	94	31	16
100	89	114	35	16
125	110	139	43	20

TCM2

Φ32~Φ125

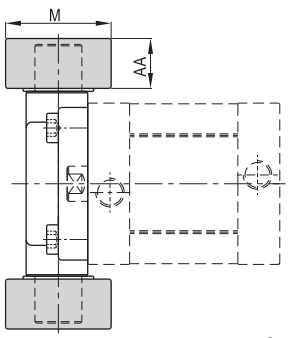

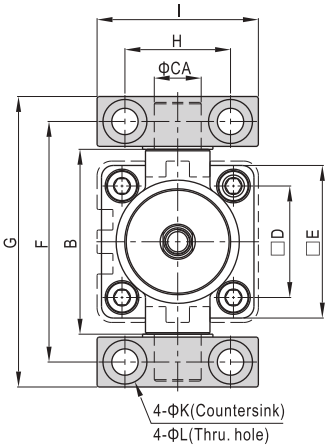

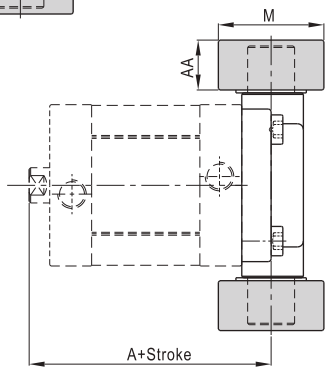

Bore size\Item	A	AA	B	CA	D	E	F	G	H	I	K	L	M
32	63	14	52	12	32.5	46	66	80	32	46	11	7	30
40	66.5	17	65	16	38	52	82	99	36	55	15	9	36
50	71.5	17	75	16	46.5	64	94	111	36	55	15	9	36
63	77	20.5	90	20	56.5	74	113.5	134	42	65	18	11	40
80	85	20.5	112	20	72	94	133.5	154	42	65	18	11	40
100	102	24.5	135	25	89	114	159.5	184	50	75	20	14	50
125	124	24.5	170	25	110	139	187.5	212	50	75	20	14	50

Note) TCM2 cann't be used alone, it must be used with FTC.
The installation position of the accessories can not be adjusted arbitrarily.

I knockle

F-ACQ12I

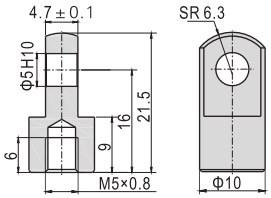

Note) Other I knockles are common parts .Please refer to P377 for knuckle detail,

Y knockle

F-ACQ12Y

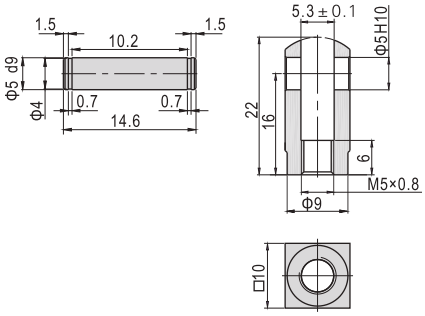

Note) Other Y knockles are common parts .Please refer to P378 for knuckle detail,

List for ordering code of accessories

Accessoriies / Bore size	Mounting accessory			
	LB	FA/FB	CA	CB
12	F-ACE12LB	F-ACE12FA	F-ACE12CA	-
16	F-ACP12LB	F-ACE16FA	F-ACE16CA	-
20	F-ACP20LB	F-ACE20FA	F-ACE20CA	-
25	F-ACP25LB	F-ACE25FA	F-ACE25CA	-
32	F-ACE32LB	F-SI32FA	F-SE32CA	F-SE32CB
40	F-ACE40LB	F-SI40FA	F-SE40CA	F-SE40CB
50	F-ACE50LB	F-SI50FA	F-SE50CA	F-SE50CB
63	F-ACE63LB	F-SI63FA	F-SE63CA	F-SE63CB
80	F-ACE80LB	F-SI80FA	F-SE80CA	F-SE80CB
100	F-ACE100LB	F-SI100FA	F-SE100CA	F-SE100CB
125	-	F-SI125FA	F-SE125CA	F-SE125CB

Accessoriies / Bore size	Mounting accessory			
	CR	SDB	FTC	TCM2
12	-	F-MI12SDB	-	-
16	-	F-MI12SDB	-	-
20	-	F-MI20SDB	-	-
25	-	F-MI20SDB	-	-
32	F-SI32CR	-	F-SI32FTC	F-SI32TCM2
40	F-SI40CR	-	F-SI40FTC	F-SI40TCM2
50	F-SI50CR	-	F-SI50FTC	F-SI40TCM2
63	F-SI63CR	-	F-SI63FTC	F-SI63TCM2
80	F-SI80CR	-	F-SI80FTC	F-SI63TCM2
100	F-SI100CR	-	F-SI100FTC	F-SI125TCM2
125	F-SI125CR	-	F-SI125FTC	F-SI125TCM2

Accessoriies / Bore size	Knuckle			
	I: I Knuckle	Y: Y Knuckle	F: F Knuckle	U: U Knuckle
12	F-ACQ12I	F-ACQ12Y	F-M5X080F	F-M5X080U
16	F-M6X100I	F-M6X100Y	F-M6X100F	F-M6X100U
20	F-M8X125I	F-M8X125Y	F-M8X125F	F-M8X125U
25				
32	F-M10X125I	F-M10X125Y	F-M10X125F	F-M10X125U
40				
50	F-M12X125I	F-M12X125Y	F-M12X125F	F-M12X125U
63				
80	F-M16X150I	F-M16X150Y	F-M16X150F	F-M16X150U
100				
125	F-M20X150I	F-M20X150Y	F-M20X150F	F-M20X150U

Accessoriies / Bore size	Sensor switch	
	CS1–E	DS1–E
12~125	CS1-E	DS1-E

Product series

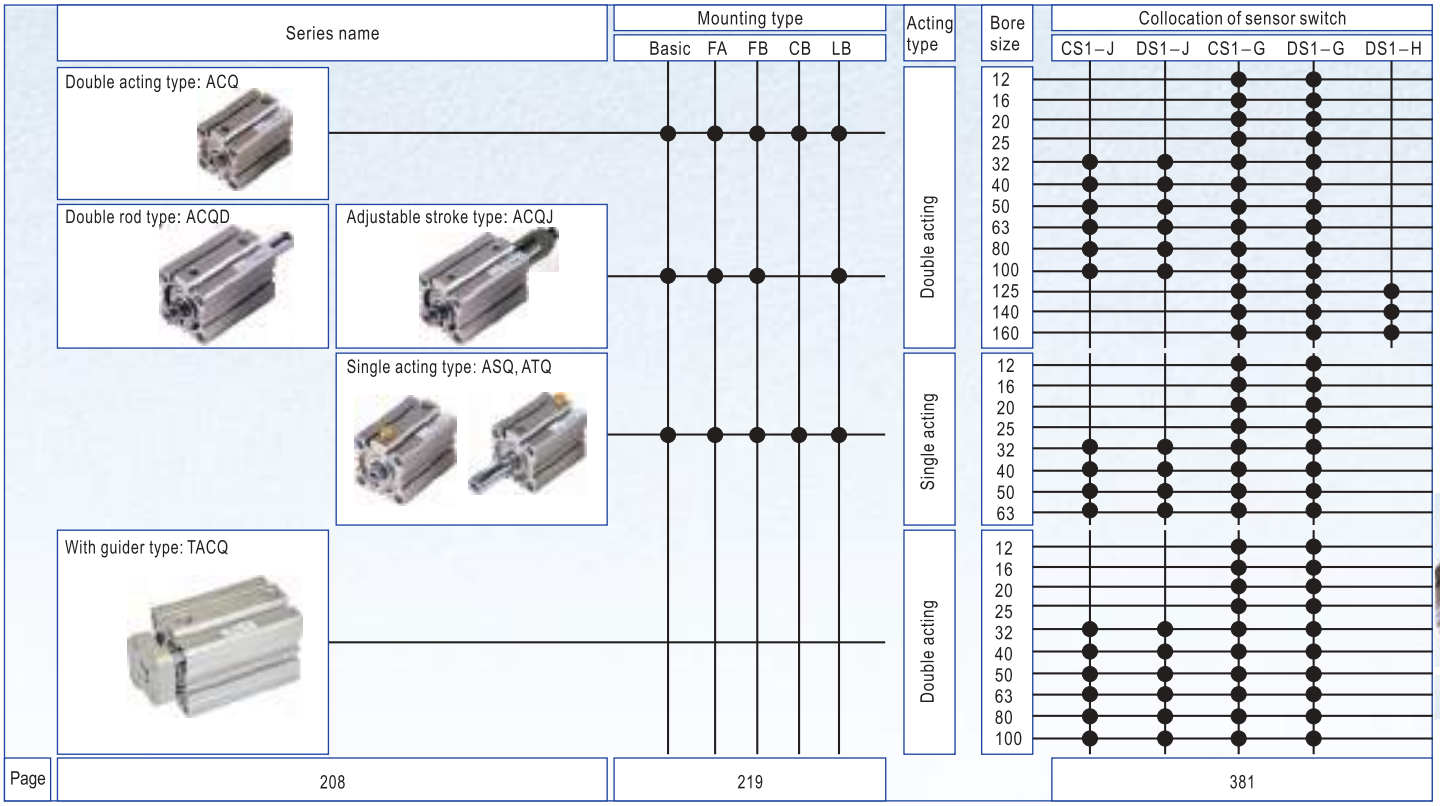

ACQ

Installation and application

1. When load changes in the work, the cylinder with abundant output capacity shall be selected.
2. Relative cylinder with high temperature resistance or corrosion resistance shall be chosen under the condition of high temperature or corrosion.
3. Necessary protection measure shall be taken in the environment with higher humidity, much dust or water drops, oil dust and welding dregs.
4. Dirty substances in the pipe must be eliminated before cylinder is connected with pipeline to prevent the entrance of particles into the cylinder.
5. The medium used by cylinder shall be filtered to 40 μ m or below.
6. As both of the front cover and piston of the cylinder are short, typically too large stroke can not be selected.
7. Anti-freezing measure shall be adopted under low temperature environment to prevent moisture freezing.
8. The cylinder shall avoid the influence of side load in operation to maintain the normal work of cylinder and extend the service life.
9. If the cylinder is dismantled and stored for a long time, please conduct anti-rust treatment to the surface. Anti-dust caps shall be added in air inlet and outlet ports. The front and back cover can not be dismantled, which shall be especially noticed.
10. C clip Installation:
    10.1. Removal & Installation of C clip must be done with proper tool & care.
    10.2. Ensure C clip is securely fitted into the proper slot to prevent leakage.

Criteria for selection: Cylinder thrust

Unit：Newton(N)

Bore size (mm)	Rod size (mm)	Acting type		Pressure area (mm^2)	Operating pressure(MPa) 0.1	0.2	0.3	0.4	0.5	0.6	0.7
12	6	Single acting	Push side	113.1	-	13.6	24.9	36.2	47.5	58.9	70.2
			Pull side	84.8	-	8.0	16.4	24.9	33.4	41.9	50.4
		Double acting	Push side	113.1	11.3	22.6	33.9	45.2	56.5	67.9	79.2
			Pull side	84.8	8.5	17.0	25.4	33.9	42.4	50.9	59.4
16	8	Single acting	Push side	201.1	-	27.0	47.1	67.2	87.3	107.4	127.5
			Pull side	150.8	-	17.0	32.0	47.1	62.2	77.3	92.4
		Double acting	Push side	201.1	20.1	40.2	60.3	80.4	100.5	120.6	140.7
			Pull side	150.8	15.1	30.2	45.2	60.3	75.4	90.5	105.6
20	10	Single acting	Push side	314.2	-	36.8	68.2	99.7	131.1	162.5	193.9
			Pull side	235.6	-	21.1	44.7	68.2	91.8	115.4	138.9
		Double acting	Push side	314.2	31.4	62.8	94.2	125.7	157.1	188.5	219.9
			Pull side	235.6	23.6	47.1	70.7	94.2	117.8	141.4	164.9
25	12	Single acting	Push side	490.9	18.1	67.2	116.3	165.3	214.4	263.5	312.6
			Pull side	377.8	6.8	44.6	82.3	120.1	157.9	195.7	233.4
		Double acting	Push side	490.9	49.1	98.2	147.3	196.3	245.4	294.5	343.6
			Pull side	377.8	37.8	75.6	113.3	151.1	188.9	226.7	264.4
32	16	Single acting	Push side	804.2	27.4	107.8	188.3	268.7	349.1	429.5	510.0
			Pull side	603.2	7.3	67.6	128.0	188.3	248.6	308.9	369.2
		Double acting	Push side	804.2	80.4	160.8	241.3	321.7	402.1	482.5	563.0
			Pull side	603.2	60.3	120.6	181.0	241.3	301.6	361.9	422.2

Bore size (mm)	Rod size (mm)	Acting type		Pressure area (mm^2)	Operating pressure(MPa) 0.1	0.2	0.3	0.4	0.5	0.6	0.7
40	16	Single acting	Push side	1256.6	44.7	170.3	296.0	421.7	547.3	673.0	798.6
			Pull side	1055.6	24.6	130.1	235.7	341.2	446.8	552.3	657.9
		Double acting	Push side	1256.6	125.7	251.3	377.0	502.7	628.3	754.0	879.6
			Pull side	1055.6	105.6	211.1	316.7	422.2	527.8	633.3	738.9
50	20	Single acting	Push side	1963.5	96.3	292.7	489.0	685.4	881.7	1078.1	1274.4
			Pull side	1649.3	64.9	229.9	394.8	559.7	724.7	889.6	1054.5
		Double acting	Push side	1963.5	196.3	392.7	589.0	785.4	981.7	1178.1	1374.4
			Pull side	1649.3	164.9	329.9	494.8	659.7	824.7	989.6	1154.5
63	20	Single acting	Push side	3117.2	141.7	453.4	765.2	1076.9	1388.6	1700.3	2012.1
			Pull side	2803.1	110.3	390.6	670.9	951.2	1231.5	1511.9	1792.2
		Double acting	Push side	3117.2	311.7	623.4	935.2	1246.9	1558.6	1870.3	2182.1
			Pull side	2803.1	280.3	560.6	840.9	1121.2	1401.5	1681.9	1962.2
80	25	Double acting	Push side	5026.5	502.7	1005.3	1508.0	2010.6	2513.3	3015.9	3518.6
			Pull side	4535.7	453.6	907.1	1360.7	1814.3	2267.8	2721.4	3175.0
100	32	Double acting	Push side	7854.0	785.4	1570.8	2356.2	3141.6	3927.0	4712.4	5497.8
			Pull side	7049.7	705.0	1409.9	2114.9	2819.9	3524.9	4229.8	4934.8
125	32	Double acting	Push side	12271.8	1227.2	2454.4	3681.5	4908.7	6135.9	7363.1	8590.2
			Pull side	11467.6	1146.8	2293.5	3440.3	4587.0	5733.8	6880.6	8027.3
140	32	Double acting	Push side	15393.8	1539.4	3078.8	4618.1	6157.5	7696.9	9236.3	10775.7
			Pull side	14589.6	1459.0	2917.9	4376.9	5835.8	7294.8	8753.8	10212.7
160	40	Double acting	Push side	20106.2	2010.6	4021.2	6031.9	8042.5	10053.1	12063.7	14074.3
			Pull side	18849.6	1885.0	3769.9	5654.9	7539.8	9424.8	11309.8	13194.7

Specification

Bore size(mm)		12	16	20	25	32	40	50	63	80	100
Acting type		Double acting									
		Single acting-Push type, Single acting-Pull type								–	
Fluid		Air(to be filtered by 40 μ m filter element)									
Operating pressure	Double acting	0.1~1.0MPa(15~145psi)(1.0~10.0bar)									
	Single acting	0.2~1.0MPa(28~145psi)(2.0~10.0bar)									
Proof pressure		1.5MPa(215psi)(15bar)									
Temperature ℃		-20~80									
Speed range mm/s		Double acting: 30~500 Single acting: 50~500									
Stroke tolerance		$0\sim100^{+1.0}_{0}$ $>100^{+1.5}_{0}$									
Cushion type		Bumper									
Port size ①		M5×0.8				1/8"		1/4"		3/8"	

① G thread and NPT thread are available. Add) Refer to P381~402 for detail of sensor switch.

Symbol

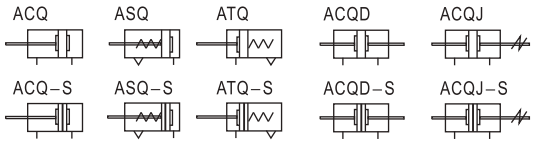

Product feature

1. JIS standard is implemented.
2. C clip is adopted to connect the cylinder body and back cover or front cover, and riveted structure is adopted to connect piston and piston rod to make it compact and reliable.
3. The internal diameter of the body is treated with rolling followed by the treatment of hard anodizing, forming an excellent abrasion resistance and durability.
4. The seal of piston adopts heterogeneous two-way seal structure. It has compact dimension and the function of grease reservation.
5. Compact structure can effectively save installation space.
6. There are magnetic switch slots around the cylinder body, which is convenient to install inducting switch.
7. Installing accessories with various specifications are optional.

Stroke

Bore size (mm)		Standard stroke (mm)	Max. std stroke	Max. stroke	
				Without magnet	With magnet
12	Double acting	5 10 15 20 25 30 35 40 45 50	50	80	70
	Single acting	5 10 15 20	20	–	-
16	Double acting	5 10 15 20 25 30 35 40 45 50 55 60	60	80	70
	Single acting	5 10 15 20	20	-	-
20 25	Double acting	5 10 15 20 25 30 35 40 45 50 60 70 75 80 90 100	100	140	130
	Single acting	5 10 15 20 25 30	30	-	-
32 40 50 63	Double acting	5 10 15 20 25 30 35 40 45 50 60 70 75 80 90 100	100	100	100
	Single acting	5 10 15 20 25 30			
80 100	Double acting	5 10 15 20 25 30 35 40 45 50 60 70 75 80 90 100	100	-	-

Note) 1. Please contact the company for other special strokes.
2. The dimensions of non-std stroke cylinder has the same dimensions as the next longer stroke std. stroke cylinder. e.g. 23mm stroke cylinder has the same dimensions of 25 std. stroke cylinder.

Ordering code

ACQ 20×30 S B □ G

ACQD 20×30 S B □ G

ACQJ 20×30-30 S B □ G

Model

ACQ: Compact cylinder(Double acting)
ASQ: Compact cylinder (Single acting-push)
ATQ: Compact cylinder (Single acting-pull)
ACQD: Compact cylinder(Double rod)
ACQJ: Compact cylinder (Adjustable stroke)

Bore size

Model	Bore size
ACQ	12 16 20 25 32 40 50 63 80 100
ASQ	12 16 20 25 32 40 50 63
ATQ	12 16 20 25 32 40 50 63
ACQD	12 16 20 25 32 40 50 63 80 100
ACQJ	12 16 20 25 32 40 50 63 80 100

Stroke

Refer to stroke table for details

Adjustable stroke

Model	Adjustable stroke
ACQJ	10: 10mm
	20: 20mm
	30: 30mm
	40: 40mm
	50: 50mm
	75: 75mm
	100: 100mm
Others	No this code

Thread type ②

G: G
T: NPT

Mounting type ①

Model	Mounting type
ACQ ASQ ATQ	Blank: No accessories
	FA: FA type
	FB: FB type
	CB: CB type
	LB: LB type
ACQD ACQJ	Blank: No accessories
	FA: FA type
	FB: FB type
	LB: LB type

Rod type

Blank: Female thread
B: Male thread

Magnet

Blank: Without magnet
S: With magnet

① Please refer to page 219 for accessory parts.
② Standard thread is blank here.

Inner structure and material of major parts

ACQ

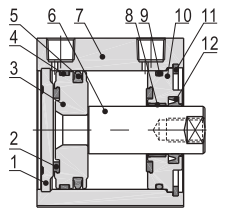

ACQS

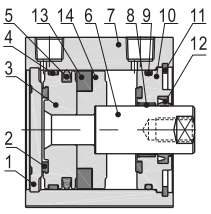

NO.	Item		Material
1	Back cover		No(Φ12, 16)\Aluminum alloy(Others)
2	Bumper		TPU(Φ12~25)NBR(Others)
3	Piston		Brass(Φ12, 16)\Aluminum alloy(Others)
4	Wear ring		No(Φ12~32)\Wear resistant material(Others)
5	Piston seal		NBR
6	Piston rod		Carbon steel with 20 μ m chrome plated
7	Body		Aluminum alloy
8	Bushing		No(Φ12~32)\Wear resistant material(Others)
9	O-ring		NBR
10	Front cover		Aluminum alloy
11	C clip		Spring steel
12	Front cover packing		NBR
13	Magnet	Φ12~25	Sintered metal(Neodymium-iron-boron)
		Others	Plastic
14	Magnet holder		Brass(Φ12, 16)Aluminum alloy(Others)

Dimensions

ACQ

Φ12, Φ16

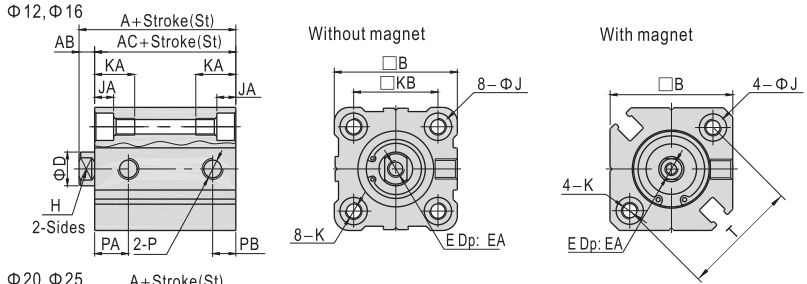

Φ20, Φ25

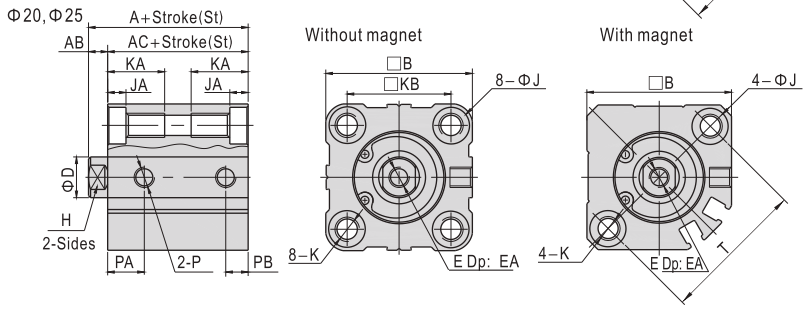

Bore size\Item	A			AC			PA	PB	A	AC	PA	PB	AB
	Without magnet								With magnet				
	St≤50	St=55	St≥60	St≤50	St=55	St≥60	–	–					
12	20.5	-	-	17	-	-	7.5	5	31.5	28	9	7	3.5
16	22	22	-	18.5	18.5	-	8	5.5	34	30.5	9.5	5.5	3.5
20	24	-	34	19.5	-	29.5	9	5.5	36	31.5	9.5	5.5	4.5
25	27.5	-	37.5	22.5	-	32.5	11	5.5	37.5	32.5	11	5.5	5

Bore size\Item	B	D	E	EA	H	J	JA	K	KA	KB	P	T
12	25	6	M3×0.5	6	5	6.5	3.5	M4×0.7 Thru.hole: Φ3.4	11	15.5	M5×0.8	22
16	29	8	M4×0.7	8	6	6.5	3.5	M4×0.7 Thru.hole: Φ3.4	11	20	M5×0.8	28
20	36	10	M5×0.8	7	8	9	7	M6×1.0 Thru.hole: Φ5.2	17	25.5	M5×0.8	36
25	40	12	M6×1.0	12	10	9	7	M6×1.0 Thru.hole: Φ5.2	17	28	M5×0.8	40

Φ32~Φ100 (Stroke≤100)

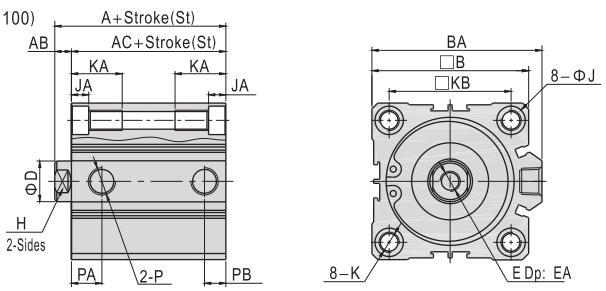

Item	A		AC		A	AC	AB	B	BA	D	E	EA
	Without magnet				With magnet							
Bore size\Stroke	St≤50	St≥60	St≤50	St≥60	-	-						
32	30	40	23	33	40	33	7	45	49.5	16	M8×1.25	13
40	36.5	46.5	29.5	39.5	46.5	39.5	7	53	57	16	M8×1.25	13
50	38.5	48.5	30.5	40.5	48.5	40.5	8	64	71	20	M10×1.5	15
63	44	54	36	46	54	46	8	77	84	20	M10×1.5	15
80	53.5	63.5	43.5	53.5	63.5	53.5	10	98	104	25	M16×2.0	20
100	65	75	53	63	75	63	12	117	123.5	32	M20×2.5	26

Bore size\Item		H	J	JA	K	KA	KB	P	PA	PB	PA	PB
									Without magnet		With magnet	
32	St=5	14	9	7	M6×1.0 Thru.hole: Φ5.2	17	34	1/8"	7.5	6.5	10.5	7.5
	St>5								10.5	7.5		
40		14	9	7	M6×1.0 Thru.hole: Φ5.2	17	40	1/8"	11	8	11	8
50	St=5	17	11	8	M8×1.25 Thru.hole: Φ6.8	22	50	1/4"	9	9	10.5	10.5
	St>5								10.5	10.5		
63	St=5	17	14	10.5	M10×1.5 Thru.hole: Φ8.5	28.5	60	1/4"	14	9.5	15	10.5
	St>5								15	10.5		
80		22	17.5	13.5	M12×1.75 Thru.hole: Φ10.3	35.5	77	3/8"	16	14	16	14
100		27	17.5	13.5	M12×1.75 Thru.hole: Φ10.3	35.5	94	3/8"	20	17.5	20	17.5

ASQ, ATQ

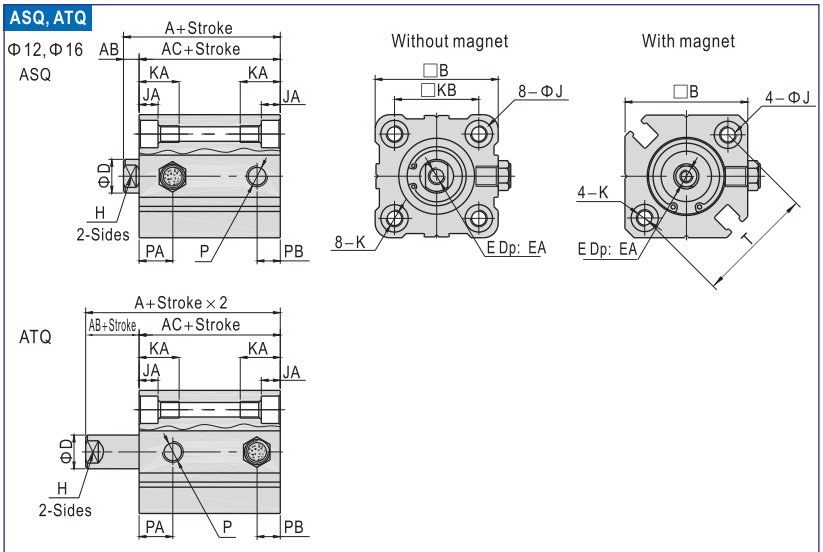

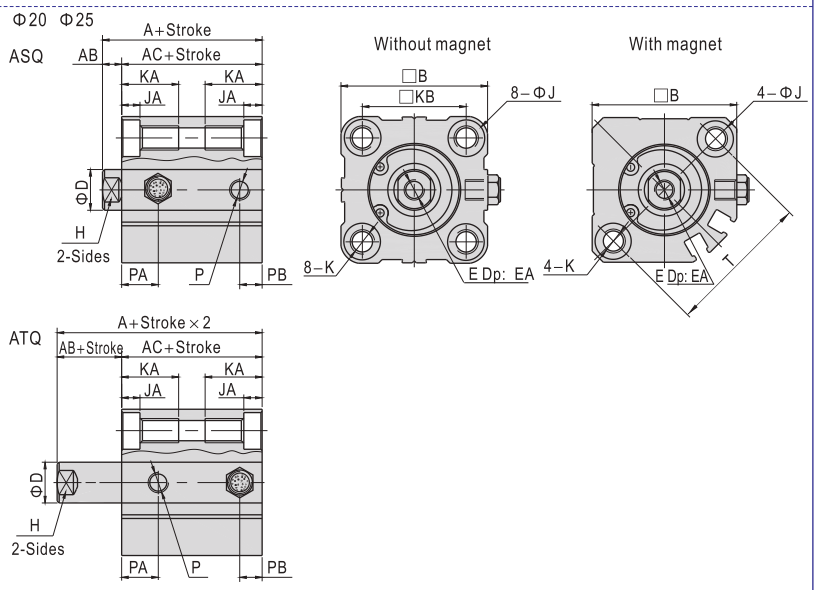

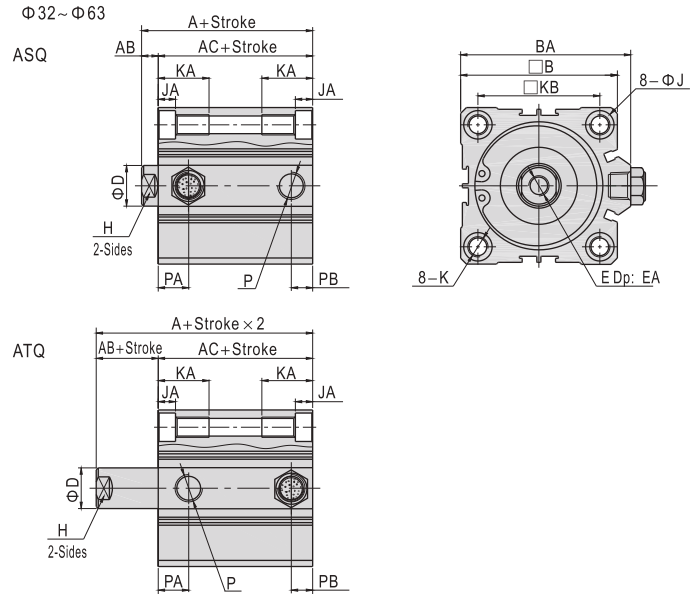

Bore size\Item	A(Without magnet)			A(With magnet)			AB	B	BA	D
Stroke	5\10	15\20	25\30	5\10	15\20	25\30				
12	25.5	30.5	-	36.5	41.5	-	3.5	25	-	6
16	27	32	-	39	44	-	3.5	29	-	8
20	29	34	39	41	46	51	4.5	36	-	10
25	32.5	37.5	42.5	42.5	47.5	52.5	5	40	-	12
32	35	40	45	45	50	55	7	45	49.5	16
40	41.5	46.5	51.5	51.5	56.5	61.5	7	53	57	16
50	48.5	53.5	58.5	58.5	63.5	68.5	8	64	71	20
63	54	59	64	64	69	74	8	77	84	20

Bore size\Item	AC(Without magnet)			AC(With magnet)			E	EA	H
Stroke	5\10	15\20	25\30	5\10	15\20	25\30			
12	22	27	-	33	38	-	M3×0.5	6	5
16	23.5	28.5	-	35.5	40.5	-	M4×0.7	8	6
20	24.5	29.5	34.5	36.5	41.5	46.5	M5×0.8	7	8
25	27.5	32.5	37.5	37.5	42.5	47.5	M6×1.0	12	10
32	28	33	38	38	43	48	M8×1.25	13	14
40	34.5	39.5	44.5	44.5	49.5	54.5	M8×1.25	13	14
50	40.5	45.5	50.5	50.5	55.5	60.5	M10×1.5	15	17
63	46	51	56	56	61	66	M10×1.5	15	17

Bore size\Item	J	JA	K	KA	KB	P
12	6.5	3.5	M4×0.7 Thru.hole: Φ3.4	11	15.5	M5×0.8
16	6.5	3.5	M4×0.7 Thru.hole: Φ3.4	11	20	M5×0.8
20	9	7	M6×1.0 Thru.hole: Φ5.2	17	25.5	M5×0.8
25	9	7	M6×1.0 Thru.hole: Φ5.2	17	28	M5×0.8
32	9	7	M6×1.0 Thru.hole: Φ5.2	17	34	1/8"
40	9	7	M6×1.0 Thru.hole: Φ5.2	17	40	1/8"
50	11	8	M8×1.25 Thru.hole: Φ6.8	22	50	1/4"
63	14	10.5	M10×1.5 Thru.hole: Φ8.5	28.5	60	1/4"

Model	Without magnet		With magnet		T
Bore size\Item	PA	PB	PA	PB	
12	7.5	5	9	7	22
16	8	5.5	9.5	5.5	28
20	9	5.5	9.5	5.5	36
25	11	5.5	11	5.5	40
32	10.5	7.5	10.5	7.5	-
40	11	8	11	8	-
50	10.5	10.5	10.5	10.5	-
63	15	10.5	15	10.5	-

Male thread

(Bore size: Φ12~Φ100, Stroke≤100)

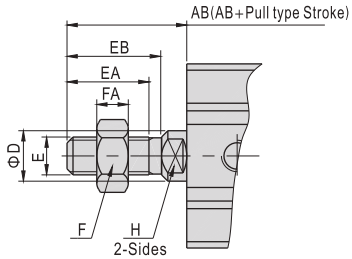

Bore size\Item	AB	D	E	EA	EB	F	FA	H
12	14	6	M5×0.8	9	10.5	8	4	5
16	15.5	8	M6×1.0	10	12	10	5	6
20	18.5	10	M8×1.25	12	14	12	6	8
25	22.5	12	M10×1.25	15	17.5	17	6	10
32	28.5	16	M14×1.5	20.5	23.5	19	8	14
40	28.5	16	M14×1.5	20.5	23.5	19	8	14
50	33.5	20	M18×1.5	26	28.5	27	11	17
63	33.5	20	M18×1.5	26	28.5	27	11	17
80	43.5	25	M22×1.5	32.5	35.5	32	13	22
100	43.5	32	M26×1.5	32.5	35.5	36	13	27

ACQD

Φ12 Φ16

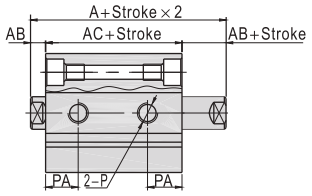

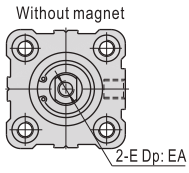

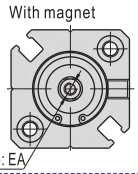

Φ20 Φ25

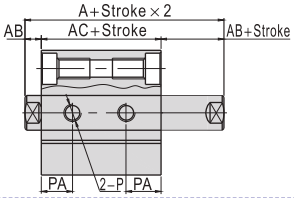

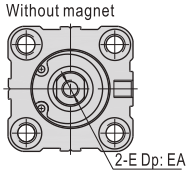

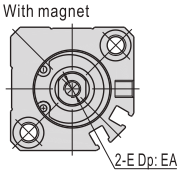

Φ32~Φ100

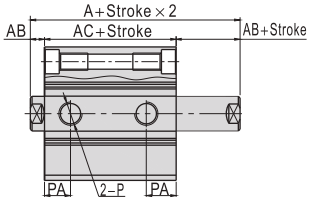

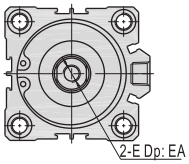

ACQJ

Φ12 Φ16

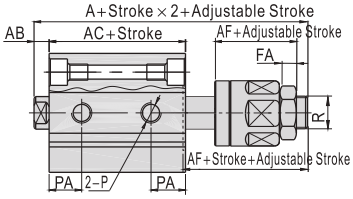

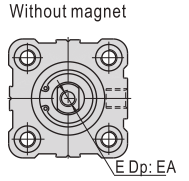

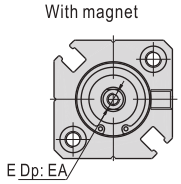

Φ20 Φ25

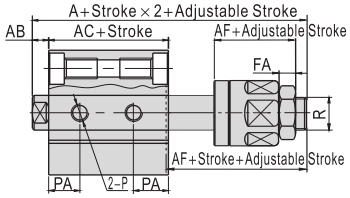

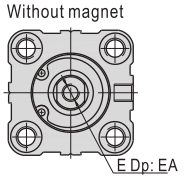

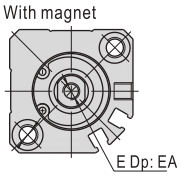

Φ32~Φ100

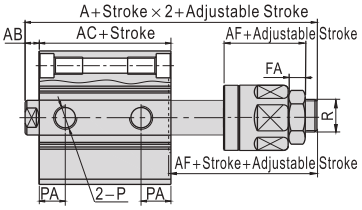

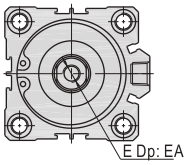

Item	A		A		AB	AC		AC		AF
	Without magnet		With magnet			Without magnet		With magnet		
Bore size\Model	ACQD	ACQJ	ACQD	ACQJ		ACQD	ACQJ	ACQD	ACQJ	
12	32.2	45.2	39.4	52.4	3.5	25.2	25.2	32.4	32.4	17
16	33	50	43	60	3.5	26	26	36	36	21
20	35	55	47	67	4.5	26	26	38	38	25
25	39	60.5	49	70.5	5	29	29	39	39	27
32	44.5	64.9	54.5	74.9	7	30.5	30.5	40.5	40.5	28
40	54	74.5	64	84.5	7	40	40	50	50	28
50	56.5	77	66.5	87	8	40.5	40.5	50.5	50.5	29
63	58	78.4	68	88.4	8	42	42	52	52	29
80	71	95.8	81	105.8	10	51	51	61	61	35.5
100	84.5	114.3	94.5	124.3	12	60.5	60.5	70.5	70.5	42.5

Bore size\Item	E	EA	FA	PA	R
12	M3×0.5	6	4	9	M5×0.8
16	M4×0.7	8	5	9.5	M6×1.0
20	M5×0.8	7	6	9.5	M8×1.25
25	M6×1.0	9.5(St=5)/12(St>5)	6	11	M10×1.25
32	M8×1.25	9(St≤10)/13(St>10)	7	10	M12×1.25
40	M8×1.25	11(St≤10)/13(St>10)	7	13	M12×1.25
50	M10×1.5	12(St≤10)/15(St>10)	8	13.5	M16×1.5
63	M10×1.5	12(St≤10)/15(St>10)	8	14.5(St=5)/16(St>5)	M16×1.5
80	M16×2.0	14(St≤15)/20(St>15)	10	16	M20×1.5
100	M20×2.5	20(St≤25)/26(St>25)	13.5	21	M27×2.0

Remark) The unmarked dimension is the same as ACQ standard type. Please refer to this page for male thread dimensions.

Specification

Bore size(mm)	125	140	160
Acting type	Double acting		
Fluid	Air(to be filtered by 40 μ m filter element)		
Operating pressure	0.05~1.0MPa(7~145psi)		
Proof pressure	1.5MPa(215psi)		
Temperature ℃	-20~80		
Speed range mm/s	30~500		
Stroke tolerance mm	$0\sim100^{+1.0}_{0}$	$>100^{+1.5}_{0}$	
Cushion type	Bumper		
Port size ①	3/8"		

① G thread and NPT thread are available. Add) Refer to P381~402 for detail of sensor switch.

Stroke

Bore size (mm)	Standard stroke (mm)	Max. std stroke	Max. stroke
125 140 160	10 20 30 40 50 75 100 125 150 175 200 250 300	300	300

Note) 1. Please contact the company for other special strokes.
2. The dimensions of non-std stroke cylinder has the same dimensions as the next longer stroke std. stroke cylinder. e.g. 23mm stroke cylinder has the same dimensions of 25 std. stroke cylinder.

Symbol

ACQ–S

ACQD–S

ACQJ–S

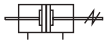

Product feature

1. JIS standard is implemented.
2. C clip is adopted to connect the cylinder body and back cover or front cover to make it compact and reliable.
3. The internal diameter of the body is treated with rolling followed by the treatment of hard anodizing, forming an excellent abrasion resistance and durability.
4. The seal of piston adopts heterogeneous two-way seal structure. It has compact dimension and the function of grease reservation.
5. Compact structure can effectively save installation space.
6. There are magnetic switch slots around the cylinder body, which is convenient to install inducting switch.

ACQ

Ordering code

ACQ 125 × 30 S B G

ACQD 125 × 30 S B G

ACQJ 125 × 30–30 S B G

Model

ACQ: Compact cylinder(Double acting)
ACQD: Compact cylinder(Double rod)
ACQJ: Compact cylinder(Adjustable stroke)

Thread type

G: G
T: NPT

Bore size

125 140 160

Rod type

Blank: Female thread
B: Male thread

Stroke

Refer to stroke table for details

Magnet

S: With magnet

Adjustable stroke

Model	Adjustable stroke
ACQJ	10: 10mm
	20: 20mm
	30: 30mm
	40: 40mm
	50: 50mm
	75: 75mm
	100: 100mm
Others	No this code

Male thread

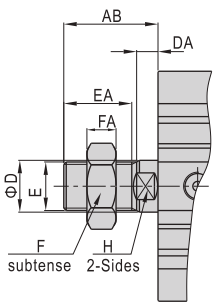

Bore size\Item	AB	D	DA	E	EA	F	FA	H
125	58	32	13	M30 × 1.5	42	46	18	27
140	58	32	13	M30 × 1.5	42	46	18	27
160	64	40	14	M36 × 1.5	47	55	21	36

Inner structure and material of major parts

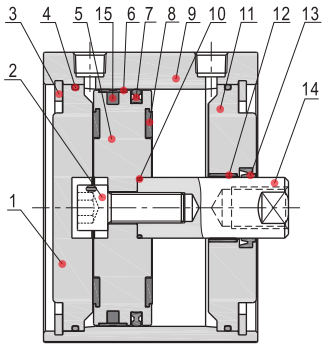

NO.	Item	Material
1	Back cover	Aluminum alloy
2	Screw	Carbon steel
3	C clip	Spring steel
4	O-ring	NBR
5	Piston	Aluminum alloy
6	Wear ring	Wear resistant material
7	Piston seal	NBR
8	Bumper	NBR
9	Body	Aluminum alloy
10	O-ring	NBR
11	Front cover	Aluminum alloy
12	Bushing	Wear resistant material
13	Front cover packing	NBR
14	Piston rod	Carbon steel with 20 μ m chrome plated
15	Magnet	Rubber

Dimensions

ACQ

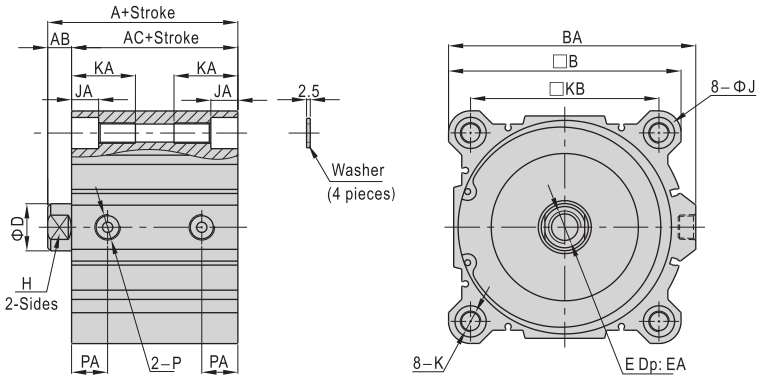

Bore size\Item	A	AB	AC	B	BA	D	E	EA(St≤10)	EA(St>10)	H
125	99	16	83	142	153	32	M22×2.5	22.5	30	27
140	99	16	83	158	168	32	M22×2.5	22.5	30	27
160	108	17	91	178	188	40	M24×3.0	26.5	33	36

Bore size\Item	J	JA	K	KA	KB	P	PA
125	21.5	18.4	M14×2.0 Thru.hole: Φ12.3	43.5	114	3/8"	24.5
140	21.5	18.4	M14×2.0 Thru.hole: Φ12.3	43.5	128	3/8"	24.5
160	24.5	21.2	M16×2.0 Thru.hole: Φ14.3	49	144	3/8"	27.5

Remark) Washer must be used when the cylinder be mounted by through hole.
Please refer to page 212 for male thread dimensions.

ACQD

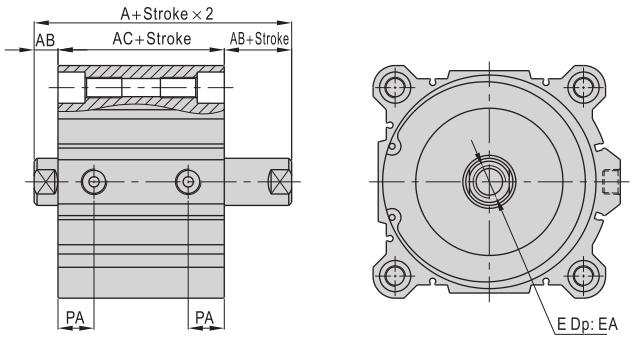

Bore size\Item	A	AB	AC	E	EA		PA
					St≤10	St>10	
125	115	16	83	M22×2.5	22.5	30	24.5
140	115	16	83	M22×2.5	22.5	30	24.5
160	125	17	91	M24×3.0	26.5	33	27.5

Remark) The unmarked dimension is the same as ACQ standard type.
Please refer to page 212 for male thread dimensions.

ACQJ

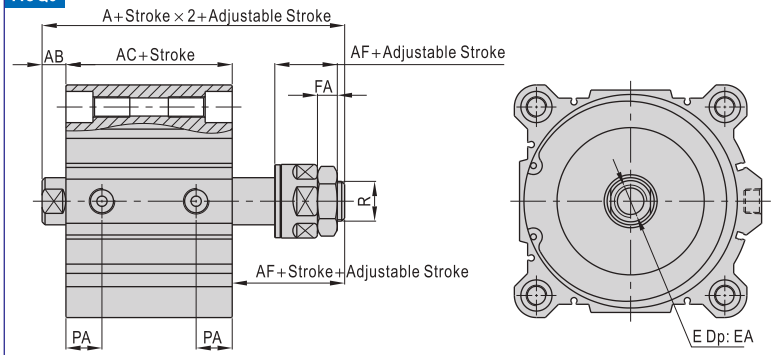

Bore size\Item	A	AB	AC	AF	E	EA		FA	PA	R
						St≤10	St>10			
125	140.8	16	83	42.5	M22×2.5	22.5	30	13.5	24.5	M27×2.0
140	140.8	16	83	42.5	M22×2.5	22.5	30	13.5	24.5	M27×2.0
160	175.3	17	91	68	M24×3.0	26.5	33	18	27.5	M36×2.0

Remark) The unmarked dimension is the same as ACQ standard type.
Please refer to page 212 for male thread dimensions.

Symbol

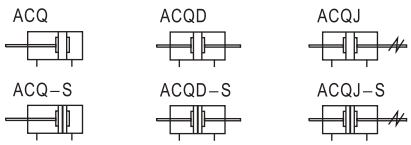

Product feature

1. JIS standard is implemented.
2. C clip is adopted to connect the cylinder body and back cover or front cover, and riveted structure is adopted to connect piston and piston rod to make it compact and reliable.
3. The internal diameter of the body is treated with rolling followed by the treatment of hard anodizing, forming an excellent abrasion resistance and durability.
4. The seal of piston adopts heterogeneous two-way seal structure. It has compact dimension and the function of greasel reservation.
5. Compact structure can effectively save installation space.
6. There are magnetic switch slots around the cylinder body, which is convenient to install inducting switch.
7. Installing accessories with various specifications are optional.

ACQ

Specification

Bore size(mm)	32	40	50	63	80	100
Acting type	Double acting					
Fluid	Air(to be filtered by 40 μ m filter element)					
Operating pressure	0.1~1.0MPa(15~145psi)					
Proof pressure	1.5MPa(215psi)					
Temperature ℃	-20~80					
Speed range mm/s	30~500					
Stroke tolerance mm	$^{+1.5}_{0}$					
Cushion type	Bumper					
Port size ①	1/8"		1/4"		3/8"	

① G thread and NPT thread are available. Add) Refer to P381~402 for detail of sensor switch.

Stroke

Bore size (mm)	Standard stroke (mm)	Max. std stroke	Max. stroke
32 40 50 63 80 100	125 150 175 200 250 300	300	350

Note) Within allowable stroke scope, when the stroke is larger than the maximum value, it shall be treated as non-standard one. Please contact the company for other special strokes.

Ordering code

ACQ 50 × 150 S B □ G

ACQD 50 × 150 S B □ G

ACQJ 50 × 150–30 S B □ G

Model

ACQ: Compact cylinder (Double acting)
ACQD: Compact cylinder (Double rod)
ACQJ: Compact cylinder (Adjustable stroke)

Bore size

32 40 50 63 80 100

Stroke

Refer to stroke table for details

Adjustable stroke

Model	Adjustable stroke
ACQJ	10: 10mm
	20: 20mm
	30: 30mm
	40: 40mm
	50: 50mm
	75: 75mm
	100: 100mm
Others	No this code

Thread type

G: G
T: NPT

Mounting type ①

Model	Mounting type
ACQ	Blank: No accessories
	FA: FA type
	FB: FB type
	CB: CB type
	LB: LB type
ACQD ACQJ	Blank: No accessories
	FA: FA type
	FB: FB type
	LB: LB type

Rod type

Blank: Female thread
B: Male thread

Magnet

Blank: Without magnet
S: With magnet

① Please refer to page 219 for accessory parts.

Inner structure and material of major parts

ACQS

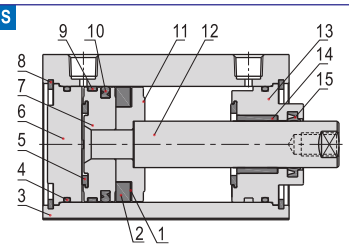

ACQ

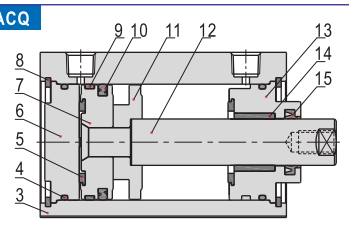

NO.	Item	Material	NO.	Item	Material
1	Magnet washer	NBR	9	Wear ring	No(Φ32)\Wear resistant material(Others)
2	Magnet	Plastic	10	Piston seal	NBR
3	Body	Aluminum alloy	11	Magnet holder	Aluminum alloy
4	O-ring	NBR	12	Piston rod	Carbon steel with 20 μ m chrome plated
5	Bumper	NBR	13	Front cover	Aluminum alloy
6	Back cover	Aluminum alloy	14	Bushing	No(Φ32)\Wear resistant material(Others)
7	Piston	Aluminum alloy	15	Front cover packing	NBR
8	C clip	Spring steel			

Dimensions

ACQ

Φ32~Φ100(Stroke > 100)

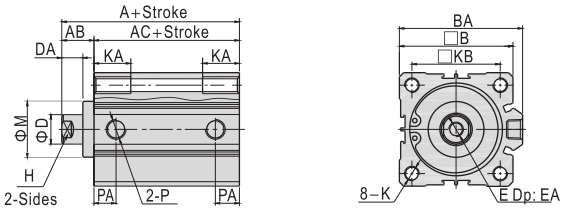

Bore size\Item	A	AB	AC	B	BA	D	DA	E	EA
32	62.5	17	45.5	45	49.5	16	12	M8 × 1.25	13
40	72	17	55	53	57	16	12	M8 × 1.25	13
50	73.5	18	55.5	64	71	20	13	M10 × 1.5	15
63	75	18	57	77	84	20	13	M10 × 1.5	15
80	86	20	66	98	104	25	15	M16 × 2.0	21
100	97.5	22	75.5	117	123.5	32	17	M20 × 2.5	27

Bore size\Item	H	K	KA	KB	M	P	PA
32	14	M6 × 1.0 Thru.hole: Φ5.2	17	34	22	1/8"	12.5
40	14	M6 × 1.0 Thru.hole: Φ5.2	17	40	28	1/8"	14
50	17	M8 × 1.25 Thru.hole: Φ6.8	22	50	35	1/4"	14
63	17	M10 × 1.5 Thru.hole: Φ8.5	27	60	35	1/4"	16.5
80	22	M12 × 1.75 Thru.hole: Φ10.3	32	77	43	3/8"	19
100	27	M12 × 1.75 Thru.hole: Φ10.3	33	94	59	3/8"	23

ACQD

Φ32~Φ100(Stroke > 100)

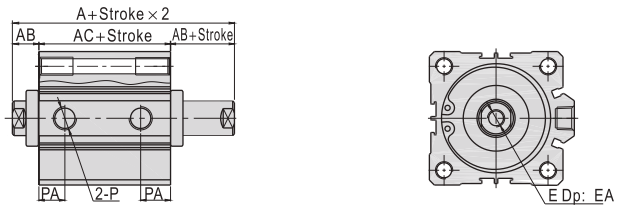

ACQJ

Φ32~Φ100(Stroke > 100)

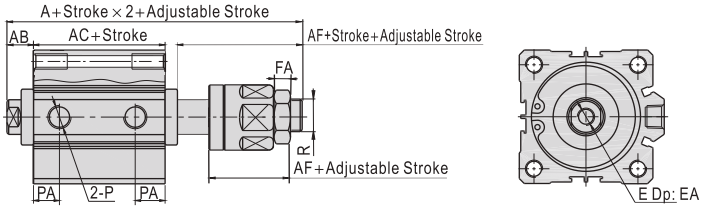

Bore size\Item	A		AC	A		AC	AB	AF	EA	FA	PA	R
	Without magnet			With magnet								
Model	ACQD	ACQJ	ACQD\ACQJ	ACQD	ACQJ	ACQD\ACQJ						
32	79.5	95.5	45.5	89.5	105.5	55.5	17	28	13	7	12.5	M12 × 1.25
40	89	105	55	99	115	65	17	28	13	7	14	M12 × 1.25
50	91.5	107.5	55.5	101.5	117.5	65.5	18	29	15	8	14	M16 × 1.5
63	93	109	57	103	119	67	18	29	15	8	16.5	M16 × 1.5
80	106	126.5	66	116	136.5	76	20	35.5	21	10	19	M20 × 1.5
100	119.5	145	75.5	129.5	155	85.5	22	42.5	27	13.5	23	M27 × 2.0

Remark) The unmarked dimension is the same as ACQ standard type.

Male thread

(Bore size: Φ32~Φ100 Stroke>100 Longer type)

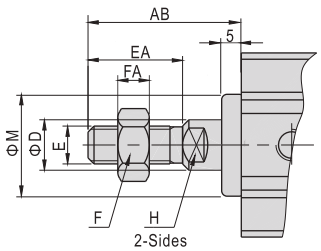

Bore size\Item	AB	D	E	EA	FA	F	H	M
32	38.5	16	M14 × 1.5	23.5	8	19	14	22
40	38.5	16	M14 × 1.5	23.5	8	19	14	28
50	43.5	20	M18 × 1.5	28.5	11	27	17	35
63	43.5	20	M18 × 1.5	28.5	11	27	17	35
80	53.5	25	M22 × 1.5	35.5	13	32	22	43
100	53.5	32	M26 × 1.5	35.5	13	36	27	59

TACQ Series(With guider type)

Specification

Bore size(mm)	12	16	20	25	32	40	50	63	80	100
Acting type	Double acting									
Fluid	Air(to be filtered by 40 μ m filter element)									
Operating pressure	0.1~1.0MPa(14~145psi)									
Proof pressure	1.5MPa(215psi)									
Temperature ℃	-20~80									
Speed range mm/s	30~500									
Stroke tolerance	$^{+1.0}_{0}$									
Cushion type	Bumper									
Port size ①	M5×0.8				1/8"		1/4"		3/8"	
Non-rotating tolerance ②	±0.2°		±0.1°							

① G thread and NPT thread are available. ② Retract position.
Add) Refer to P381~402 for detail of sensor switch.

Symbol

TACQ

TACQ-S

Stroke

Bore size (mm)	Standard stroke (mm)												Max. std stroke(mm)	Middle stroke range(mm)
	5	10	15	20	25	30	35	40	45	50	75	100		
12 16	●	●	●	●	●	●	×	×	×	×	×	×	30	1~29
20 25	●	●	●	●	●	●	●	●	●	●	×	×	50	1~49
32 40	●	●	●	●	●	●	●	●	●	●	●	●	100	1~99
50 63 80 100	×	●	●	●	●	●	●	●	●	●	●	●	100	5~99

Note) 1. Please contact the company for other special strokes.
2. The dimensions of non-std stroke cylinder has the same dimensions as the next longer stroke std. stroke cylinder. e.g. 23mm stroke cylinder has the same dimensions of 25 std. stroke cylinder.

Product feature

1. JIS standard is implemented and with guider.
2. C clip is adopted to connect the cylinder body and back cover or front cover to make it compact and reliable.
3. The internal diameter of the body is treated with rolling followed by the treatment of hard anodizing, forming an excellent abrasion resistance and durability.
4. The seal of piston adopts heterogeneous two-way seal structure. It has compact dimension and the function of greasel reservation.
5. Compact structure can effectively save installation space.
6. There are magnetic switch slots around the cylinder body, which is convenient to install inducting switch.
7. Double rod non-rotating structure enables to bear large working load and lateral load.

Ordering code

TACQ 50 × 100 S G

Model
TACQ: Compact cylinder
(Double acting with guider)

Bore size
12 16 20 25 32 40 50 63 80 100

Stroke
Refer to stroke table for details

Magnet
Blank: Without magnet
S: With magnet

Thread type
G: G
T: NPT

Inner structure and material of major parts

TACQS

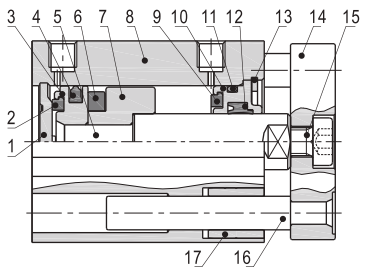

TACQ

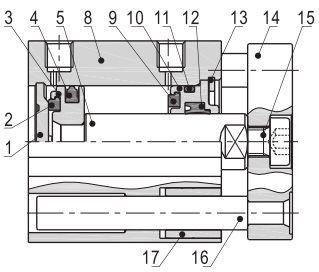

NO.	Item	Material	NO.	Item	Material
1	Back cover	Aluminum alloy	10	Front cover	Aluminum alloy
2	Bumper	NBR	11	O-ring	NBR
3	Piston	Aluminum alloy	12	Front cover packing	NBR
4	Piston seal	NBR	13	C clip	Spring steel
5	Piston rod	Carbon steel with 20 μ m chrome plated	14	Fixing plate	Aluminum alloy
6	Magnet	Sintered metal(Neodymium-iron-boron)	15	Screw	Carbon steel
7	Magnet holder	Aluminum alloy	16	Leader	Stainless steel
8	Body	Aluminum alloy	17	Bushing	Brass
9	Wear ring	NBR			

Installation and application

1. TACQ series cylinder is designed with double guide rod which is non-rotating. Make sure the non-rotating accuracy of the fixing plate is in the allowable range.

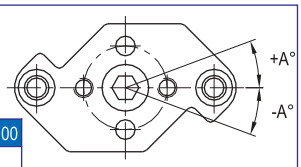

Bore size	12,16	20,25,32,40,50,63,80,100
Non-rotating tolerance	±0.2°	±0.1°

2. Do not apply reverse torque to the piston rods. The torque beyond the limits may cause malfunction or reduction of the service life.

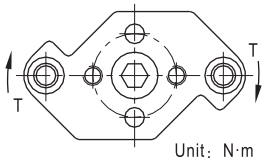

Unit: N·m

Bore size\Stroke	5	10	15	20	25	30	35	40	45	50	75	100
12	0.11	0.10	0.08	0.07	0.07	0.06	–	–	–	–	–	–
16	0.15	0.12	0.11	0.10	0.09	0.08	–	–	–	–	–	–
20	0.37	0.32	0.28	0.25	0.23	0.21	0.19	0.18	0.17	0.16	–	–
25	0.40	0.35	0.31	0.28	0.25	0.23	0.21	0.20	0.18	0.17	–	–
32	0.66	0.59	0.53	0.49	0.45	0.42	0.39	0.36	0.34	0.32	0.25	0.20
40	1.06	0.96	0.88	0.81	0.75	0.70	0.65	0.61	0.58	0.55	0.43	0.36
50	–	1.70	1.56	1.45	1.35	1.26	1.19	1.12	1.06	1.01	0.80	0.67
63	–	3.90	3.62	3.37	3.15	2.96	2.80	2.65	2.51	2.39	1.92	1.61
80	–	7.44	6.98	6.56	6.20	5.87	5.57	5.31	5.07	4.84	3.98	3.37
100	–	11.85	11.19	10.61	10.08	9.60	9.17	8.77	8.41	8.07	6.73	5.77

3. Make sure the lateral load on the mounting bracket is within the limits. Any exceeding may cause malfunction or reduction of the service life.

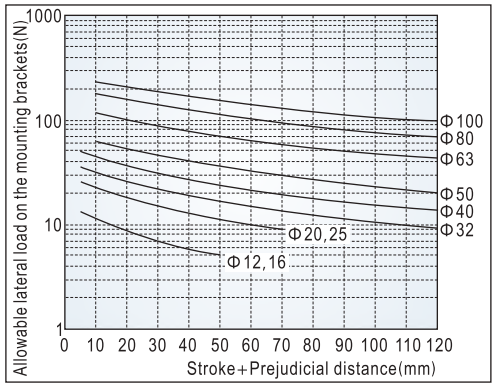

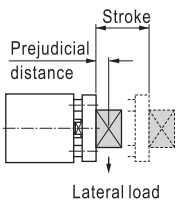

4. Make sure the load quality and the maximum speed are within the limits. Any exceeding may cause malfunction or reduction of the service life.

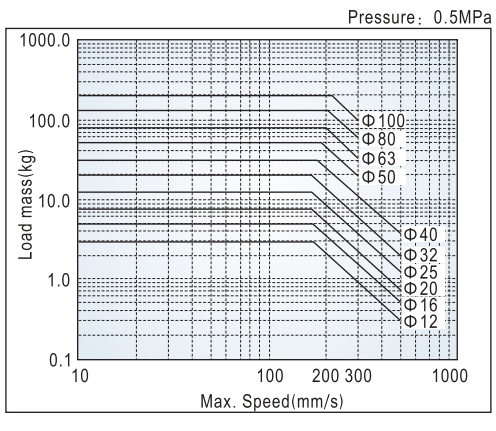

5. Caution before mounting:

5.1) Do not put hands between the mounting bracket and cylinder, which may cause damage to a human body when the piston rod retracts.

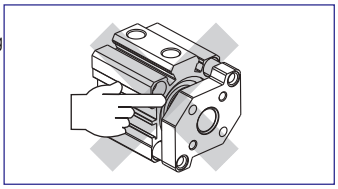

5.2) Make sure the external force against the mounting bracket is concentric with the piston rod. Any extra torque may cause damage to the cylinder.

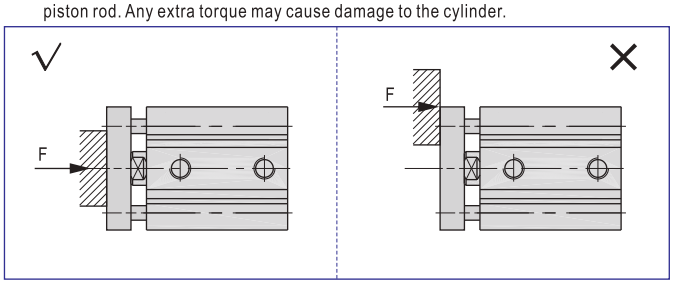

5.3) Install the fixture onto the mounting bracket only when the piston rod is in the retraction state. Do not apply the installation torque on the guide rod.

5.4) Avoid any damage on piston rod and guide rod, which may cause damage on seals and air leakage or malfunction.

Dimensions

Bore size: 12,16

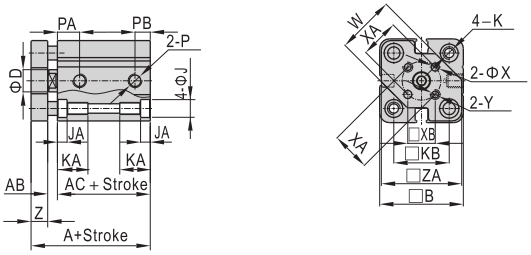

Bore size: 20,25

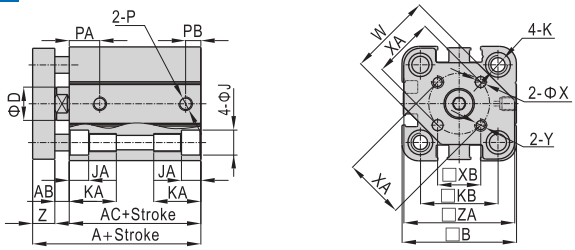

Bore size\Item	A	AC	PA	PB	A	AC	PA	PB	AB	P	B	D	J	JA
Magnet	Without magnet				With magnet									
12	26.5	17.3	7.5	5	37.5	28.3	9	7	3	M5 × 0.8	26	6	6.5	3.5
16	28	19	8	5.5	40	31	9.5	5.5	3	M5 × 0.8	30	8	6.5	3.5
20	32	20.5	9	5.5	44	32.5	9.5	5.5	3.5	M5 × 0.8	36	10	9	7
25	35.5	23	11	5.5	45.5	33	11	5.5	4.5	M5 × 0.8	41	12	9	7

Bore size\Item	K	KA	KB	W	X	XA	XB	Y	Z	ZA
12	M4 × 0.7 Thru.hole: Φ3.4	11.5	15.5	15	3	10	7.1	M3 × 0.5	6	25
16	M4 × 0.7 Thru.hole: Φ3.4	11.5	20	21	3	14	9.9	M3 × 0.5	6	29
20	M6 × 1.0 Thru.hole: Φ5.2	18	25.5	26	4	17	12	M4 × 0.7	8	35
25	M6 × 1.0 Thru.hole: Φ5.2	17.5	28	30	5	22	15.6	M5 × 0.8	8	40

Bore size: 32~100

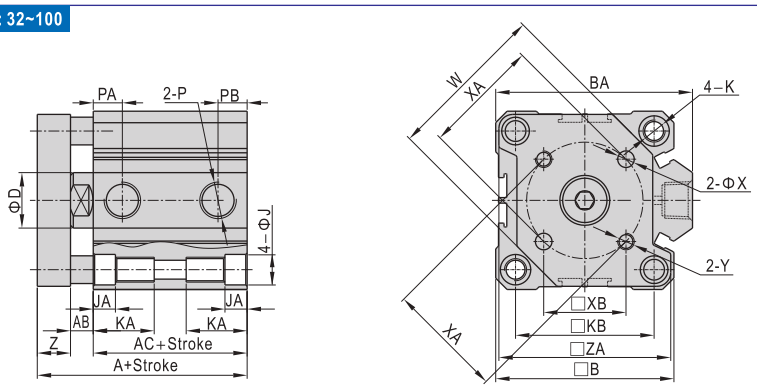

Bore size\Item	A		AC		A	AC	AB	B	BA	D	J	JA	K
	Without magnet				With magnet								
Stroke	St≤50	St≥75	St≤50	St≥75	-	-							
32	40		23.5		50	33.5	6.5	45	49.5	16	9	7	M6 × 1.0 Thru.hole: Φ5.2
40	46.5		29.9		56.5	39.9	6.6	53	57	16	9	7	M6 × 1.0 Thru.hole: Φ5.2
50	50.5	60.5	31	41	60.5	41	7.5	64	71	20	11	8	M8 × 1.25 Thru.hole: Φ6.8
63	56	66	36	46	66	46	8	77	84	20	14	10.5	M10 × 1.5 Thru.hole: Φ8.5
80	67.5	77.5	43.5	53.5	77.5	53.5	10	98	104	25	17.5	13.5	M12 × 1.75 Thru.hole: Φ10.3
100	81	91	53	63	91	63	12	117	123.5	32	17.5	13.5	M12 × 1.75 Thru.hole: Φ10.3

Bore size\Item		KA	KB	P	PA	PB	PA	PB	W	X	XA	XB	Y	Z	ZA
					Without magnet		With magnet								
32	St=5	17.5	34	1/8"	7.5	6.5	10.5	7.5	37	5	28	19.8	M5 × 0.8	10	43
	St>5				10.5	7.5									
40		17.5	40	1/8"	11	8	11	8	46	5	33	23.3	M5 × 0.8	10	51
50		22.5	50	1/4"	10.5	10.5	10.5	10.5	58	6	42	29.7	M6 × 1.0	12	62
63		28.5	60	1/4"	15	10.5	15	10.5	69	6	50	35.4	M6 × 1.0	12	75
80		35.5	77	3/8"	16	14	16	14	90	8	65	46	M8 × 1.25	14	95
100		35.5	94	3/8"	20	17.5	20	17.5	113.5	10	80	56.6	M10 × 1.5	16	114.5

Ordering code

F-ACQ 50 LB

- Accessory
- Model
- Bore size
- Accessory type ①

Mounting accessory	LB: LB type
	FA: FA type
	FB: FB type
	CB: CB type ②
Knuckle③	I: I Knuckle
	Y: Y Knuckle

① Please refer to accessory list for selection and ordering information.
② CB is attached with relevant PIN.
③ Please refer to page 379, 380 for others knuckle.

Accessory selection

Cylinder model		Accessories	Mounting accessory LB	FA	FB	CB	Knuckle ① I	Y	Sensor switch ② CS1-J DS1-J	CS1-G DS1-G	DS1-H
ACQ	Female thread	Standard	●	●	●	●	×		×		
		With magnet	●	●	●	●	×			●	
	Male thread	Standard	●	●	●	●	●		×		
		With magnet	●	●	●	●	●			●	
ASQ ATQ	Female thread	Standard	●	●	●	●	×		×		
		With magnet	●	●	●	●	×			●	
	Male thread	Standard	●	●	●	●	●		×		
		With magnet	●	●	●	●	●			●	
ACQD	Female thread	Standard	●	●	●	×	×		×		
		With magnet	●	●	●	×	×			●	
	Male thread	Standard	●	●	●	×	●		×		
		With magnet	●	●	●	×	●			●	
ACQJ	Female thread	Standard	●	●	●	×	×		×		
		With magnet	●	●	●	×	×			●	
	Male thread	Standard	●	●	●	×	●		×		
		With magnet	●	●	●	×	●			●	

① Please refer to P377~380 for knuckle detail,
② Please refer to P381~402 for detail of sensor switch.
③ Mounting accessories and Knuckle unavailable for bore size 125,140,160 cylinder. DS1-H sensor switch only available for bore size 125,140,160 cylinder.

Material of accessories

Accessories / Bore size	Mounting accessories LB	FA	FB	CB	Knuckle I	Y	F	U
12、16	△	●	●	●	▲	▲	▲	▲
20、25	△	●	●	●	▲	▲	▲	▲
32~100	△	●	●	■	▲	■	▲	▲

●——Aluminum alloy； ▲——S45C； ■——Cast iron, △——SPCC；

List for ordering code of accessories

Accessories / Bore size	Mounting accessory LB	FA	FB	CB	Sensor switch
12	F-ACQ12LB	F-ACQ12FA		F-ACQ12CB	CS1-G DS1-G
16	F-ACQ16LB	F-ACQ16FA		F-ACQ16CB	
20	F-ACQ20LB	F-ACQ20FA		F-ACQ20CB	
25	F-ACQ25LB	F-ACQ25FA		F-ACQ25CB	
32	F-ACQ32LB	F-ACQ32FA		F-ACQ32CB	CS1-J DS1-J CS1-G DS1-G
40	F-ACQ40LB	F-ACQ40FA		F-ACQ40CB	
50	F-ACQ50LB	F-ACQ50FA		F-ACQ50CB	
63	F-ACQ63LB	F-ACQ63FA		F-ACQ63CB	
80	F-ACQ80LB	F-ACQ80FA		F-ACQ80CB	
100	F-ACQ100LB	F-ACQ100FA		F-ACQ100CB	
125	–	–		–	DS1-H
140	–	–		–	CS1-G
160	–	–		–	DS1-G

Accessories / Bore size	Knuckle I: I Knuckle	Y: Y Knuckle	F: F Knuckle	U: U Knuckle
12	F-ACQ12I	F-ACQ12Y	–	F-M5X080U
16	F-ACQ16I	F-ACQ16Y	–	F-M6X100U
20	F-ACQ20I	F-ACQ20Y	F-M8X125F	F-M8X125U
25	F-ACQ25I	F-ACQ25Y	F-M10X125F	F-M10X125U
32	F-ACQ32I	F-ACQ32Y	F-M14X150F	F-M14X150U
40				
50	F-ACQ50I	F-ACQ50Y	F-M18X150F	F-M18X150U
63				
80	F-ACQ80I	F-ACQ80Y	–	–
100	F-ACQ100I	F-ACQ100Y	–	–

Dimensions

FA, FB

Φ12~Φ25

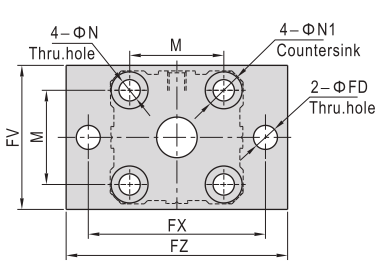

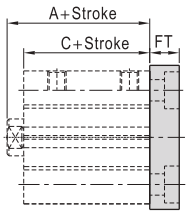

Φ32~Φ100

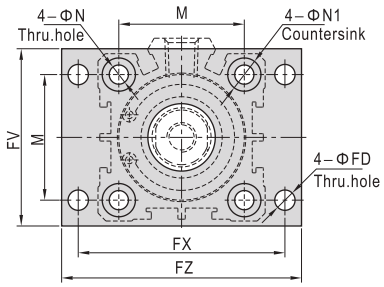

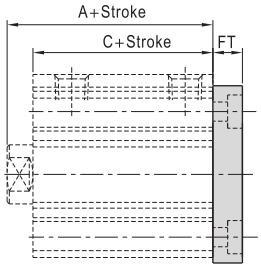

Item / Bore size	A Without magnet ≤50	55	≥60	With magnet	C Without magnet ≤50	55	≥60	With magnet	M	N	N1	FD	FT	FV	FX	FZ
Stroke																
12	20.5	-	-	31.5	17	-	-	28	15.5	4.5	7.5	4.5	5.5	25	45	55
16	22	22	-	34	18.5	18.5	-	30.5	20	4.5	7.5	4.5	5.5	30	45	55
20	24	-	34	36	19.5	-	29.5	31.5	25.5	6.5	10.5	6.5	8	39.5	48	60
25	27.5	-	37.5	37.5	22.5	-	32.5	32.5	28	6.5	10.5	6.5	8	42	52	64
32	30	-	40	40	23	-	33	33	34	6.5	10.5	5.5	8	48	56	65
40	36.5	-	46.5	46.5	29.5	-	39.5	39.5	40	6.5	10.5	5.5	8	54	62	72
50	38.5	-	48.5	48.5	30.5	-	40.5	40.5	50	8.5	13.5	6.5	9	67	76	89
63	44	-	54	54	36	-	46	46	60	10.5	16.5	9	10	80	92	108
80	53.5	-	63.5	63.5	43.5	-	53.5	53.5	77	12.5	18.5	11	12	99	116	134
100	65	-	75	75	53	-	63	63	94	12.5	18.5	11	12	117	136	154

ACQ

CB

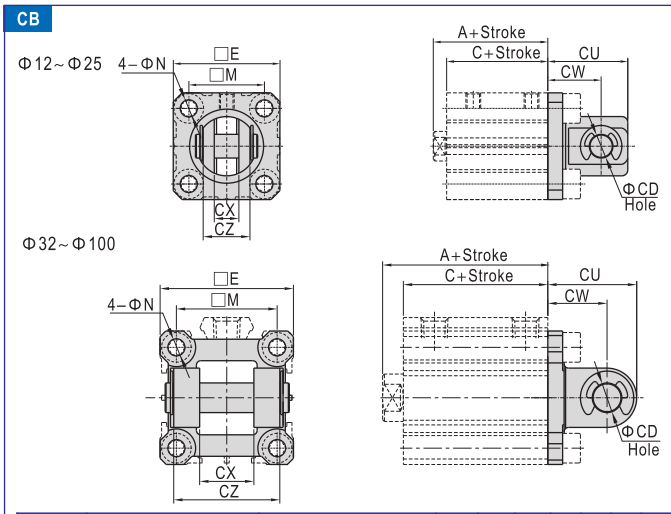

Item / Bore size / Stroke	A① Without magnet ≤50	A① Without magnet 55	A① Without magnet ≥60	A① With magnet	C Without magnet ≤50	C Without magnet 55	C Without magnet ≥60	C With magnet	E	M	N	CD	CU	CW	CX	CZ
12	20.5	-	-	31.5	17	-	-	28	25	15.5	4.5	5	20	14	5.3	9.8
16	22	22	-	34	18.5	18.5	-	30.5	29	20	4.5	5	21	15	6.8	11.8
20	24	-	34	36	19.5	-	29.5	31.5	36	25.5	6.5	8	27	18	8.3	15.8
25	27.5	-	37.5	37.5	22.5	-	32.5	32.5	40	28	6.5	10	30	20	10.3	19.8
32	30	-	40	40	23	-	33	33	45.5	34	6.5	10	30	20	18.3	35.8
40	36.5	-	46.5	46.5	29.5	-	39.5	39.5	53.5	40	6.5	10	32	22	18.3	35.8
50	38.5	-	48.5	48.5	30.5	-	40.5	40.5	64.5	50	8.5	14	42	28	22.3	43.8
63	44	-	54	54	36	-	46	46	77.5	60	10.5	14	44	30	22.3	43.8
80	53.5	-	63.5	63.5	43.5	-	53.5	53.5	98.5	77	12.5	18	56	38	28.3	55.8
100	65	-	75	75	53	-	63	63	117.5	94	12.5	22	67	45	32.3	63.8

① Value A and value C in the above table is only for ACQ series.
Please refer to relevant content for value C of other series.

LB

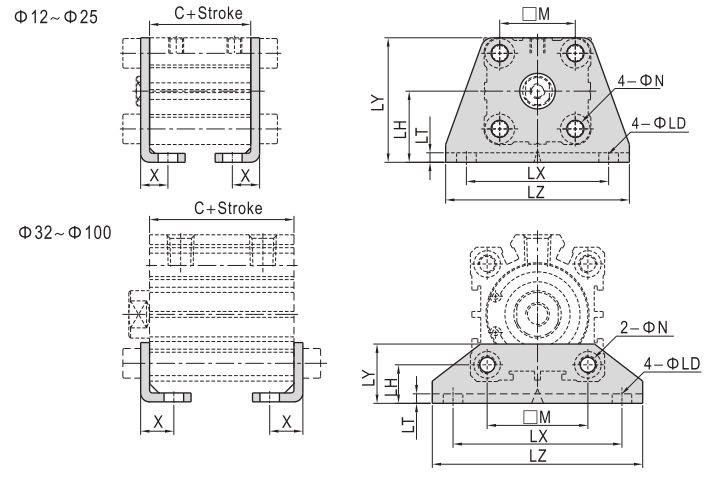

Item / Bore size / Stroke	C① Without magnet ≤50	C① Without magnet 55	C① Without magnet ≥60	C① With magnet	M	N	X	LD	LH	LT	LX	LY	LZ
12	17	-	-	28	15.5	4.5	8	4.5	17	2	34	29.5	44
16	18.5	18.5	-	30.5	20	4.5	8	4.5	19	2	38	33.5	48
20	19.5	-	29.5	31.5	25.5	6.5	9.2	6.5	24	3	48	42	62
25	22.5	-	32.5	32.5	28	6.5	10.7	6.5	26	3	52	46	66
32	23	-	33	33	34	6.5	11.2	6.5	13	3	57	20	71
40	29.5	-	39.5	39.5	40	6.5	11.2	6.5	13	3	64	20	78
50	30.5	-	40.5	40.5	50	8.5	12.2	8.5	14	3	79	22	95
63	36	-	46	46	60	10.5	13.7	10.5	16	3	95	26	113
80	43.5	-	53.5	53.5	77	13	16.5	13	20.5	4.5	118	32	140
100	53	-	63	63	94	13	23	13	24	6	137	36	162

① Value C in the above table is only for ACQ series.
Please refer to relevant content for value C of other series.

I Knuckle

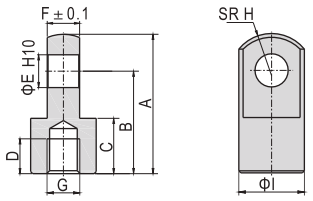

Type\Item	A	B	C	D	E	F	G	H	I
F−ACQ12I	21.5	16	9	6	5	4.7	M5×0.8	6.3	10
F−ACQ16I	32	25	11	8	5	6.2	M6×1.0	8.1	12
F−ACQ20I	34	25	13.5	8.5	8	7.7	M8×1.25	10.3	16
F−ACQ25I	41	30	16	11	10	9.7	M10×1.25	12.8	20
F−ACQ32I	42	30	16	14	10	17.6	M14×1.5	12	22
F−ACQ50I	56	40	20	18	14	21.6	M18×1.5	16	28
F−ACQ80I	71	50	23	21	18	27.6	M22×1.5	21	38
F−ACQ100I	79	55	24	22	22	31.6	M26×1.5	24	44

Y Knuckle

F−ACQ12Y
F−ACQ16Y
F−ACQ20Y
F−ACQ25Y

F−ACQ32Y
F−ACQ50Y
F−ACQ80Y
F−ACQ100Y

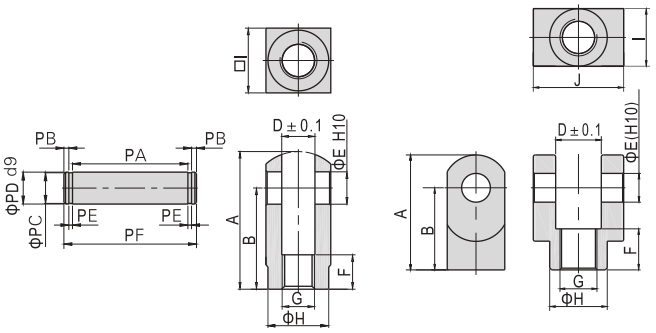

Type\Item	A	B	D	E	F	G	H	I	J	PA	PB	PC	PD	PE	PF
F−ACQ12Y	22	16	5.3	5	6	M5×0.8	9	10	-	10.2	1.5	4	5	0.7	14.6
F−ACQ16Y	28	21	6.6	5	11	M6×1.0	11	12	-	12.4	1.5	4	5	0.7	16.8
F−ACQ20Y	34	25	8.3	8	8.5	M8×1.25	15	16	-	16.2	1.5	7	8	0.9	21
F−ACQ25Y	41	30	10.3	10	10.5	M10×1.25	19	20	-	20.2	2	8	10	1.1	26.4
F−ACQ32Y	42	30	18.4	10	16	M14×1.5	22	22	36	36.2	2	8	10	1.1	42.4
F−ACQ50Y	56	40	22.4	14	20	M18×1.5	28	28	44	44.2	2	12	14	1.1	50.4
F−ACQ80Y	71	50	28.4	18	23	M22×1.5	38	38	56	56.2	2	15	18	1.7	63.6
F−ACQ100Y	79	55	32.4	22	24	M26×1.5	44	44	64	64.2	2.5	19	22	1.7	72.6

Product series

Series name			Acting type	Bore size	Collocation of sensor switch CS1–G DS1–G
Double acting type: MD	Double acting no–rotating type: MK		Double acting	6 10 16 20 25 32	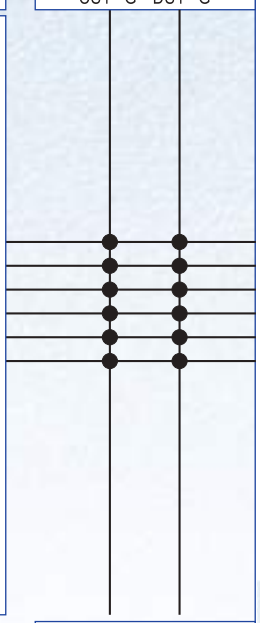
Double rod type: MDD	Double rod no–rotating type: MKD				
Adjustable stroke type: MDJ	Adjustable stroke no–rotating type: MKJ				
Single acting type: MSD	Single acting no–rotating type: MSK		Single acting		
Single acting type: MTD	Single acting no–rotating type: MTK				
Page	222	225			381

Installation and application

1. When load changes in the work, the cylinder with abundant output capacity shall be selected.
2. Relative cylinder with high temperature resistance or corrosion resistance shall be chosen under the condition of high temperature or corrosion;
3. Necessary protection measure shall be taken in the environment with higher humidity, much dust or water drops, oil dust and welding dregs.
4. Dirty substances in the pipe must be cleared away before cylinder is connected with pipeline to prevent the entrance of particles into the cylinder.
5. The medium used by cylinder shall be filtered to 40 μ m or below.
6. As both of the front cover and piston of the cylinder are short, typically too large stroke can not be selected.
7. Anti-freezing measure shall be adopted under low temperature environment to prevent moisture freezing.
8. The cylinder shall avoid the influence of side load in operation maintain the normal work of cylinder and extend the service life.
9. If the cylinder is dismantled and stored for a long time, pay attention to conduct anti-rust treatment to the surface. Anti-dust caps shall be added in air inlet and outlet ports.

Criteria for selection: Cylinder thrust

Unit：Newton(N)

Bore size (mm)	Rod size (mm)	Acting type		Pressure area (mm^2)	Operating pressure(MPa) 0.1	0.2	0.3	0.4	0.5	0.6	0.7
6	3	Single acting	Push side	28.3	-	1.5	2.9	4.3	5.7	7.2	8.6
			Pull side	21.2	-	-	0.8	1.5	2.2	2.9	3.6
		Double acting	Push side	28.3	2.8	5.7	8.5	11.3	14.1	17.0	19.8
			Pull side	21.2	2.1	4.2	6.4	8.5	10.6	12.7	14.8
10	4	Single acting	Push side	78.5	-	3.9	7.9	11.8	15.8	19.7	23.7
			Pull side	66.0	-	1.4	4.1	6.8	9.5	12.2	14.9
		Double acting	Push side	78.5	7.9	15.7	23.6	31.4	39.3	47.1	55.0
			Pull side	66.0	6.6	13.2	19.8	26.4	33.0	39.6	46.2
16	6	Single acting	Push side	201.1	-	10.1	30.2	50.3	70.4	90.5	110.6
			Pull side	172.8	-	8.7	25.9	43.2	60.5	77.8	95.1
		Double acting	Push side	201.1	20.1	40.2	60.3	80.4	100.5	120.6	140.7
			Pull side	172.8	17.3	34.6	51.8	69.1	86.4	103.7	121.0
20	8	Single acting	Push side	314.2	-	15.7	47.1	78.6	110.0	141.4	172.8
			Pull side	263.9	-	13.2	39.6	66.0	92.3	118.7	145.1
		Double acting	Push side	314.2	31.4	62.8	94.2	125.7	157.1	188.5	219.9
			Pull side	263.9	26.4	52.8	79.2	105.6	131.9	158.3	184.7
25	10	Single acting	Push side	490.9	-	24.7	73.8	122.8	179.1	221.0	270.1
			Pull side	412.3	-	20.7	61.9	103.1	144.4	185.6	226.8
		Double acting	Push side	490.9	49.1	98.2	147.3	196.3	245.4	294.5	343.6
			Pull side	412.3	41.2	82.5	123.7	164.9	206.2	247.4	288.6
32	12	Single acting	Push side	804.2	-	40.2	120.7	201.1	281.5	361.9	442.4
			Pull side	691.2	-	34.7	103.8	173.0	242.1	311.2	380.3
		Double acting	Push side	804.2	80.4	160.8	241.3	321.7	402.1	482.5	563.0
			Pull side	691.2	69.1	138.2	270.3	276.5	345.6	414.7	483.8

Specification

Bore size(mm)		6	10	16	20	25	32
Acting type	MD, MDD, MDJ	Double acting					
	MSD, MTD	Single acting-Push type, Single acting-Pull type					
Fluid		Air(to be filtered by 40 μ m filter element)					
Operating pressure	Double acting	0.1~1.0MPa(14~145psi)					
	Single acting	0.2~1.0MPa(28~145psi)					
Proof pressure		1.5MPa(215psi)					
Temperature ℃		-20~80					
Speed range mm/s		Double acting: 30~500 Single acting: 50~500					
Stroke tolerance		$^{+1.0}_{0}$					
Cushion type		Bumper					
Port size ①		M5×0.8					1/8"

① G thread and NPT thread are available. Add) Refer to P381~402 for detail of sensor switch.

Stroke

Bore size (mm)		Standard stroke (mm)	Max. std stroke	Max. stroke
6	Double acting	5 10 15 20 25 30 35	35	40
	Single acting	5 10 15 20	20	-
10	Double acting	5 10 15 20 25 30 35	35	40
	Single acting	5 10 15 20	20	-
16	Double acting	5 10 15 20 25 30 40 50	50	70
	Single acting	5 10 15 20	20	-
20	Double acting	5 10 15 20 25 30 40 50 60	60	80
	Single acting	5 10 15 20	20	-
25	Double acting	5 10 15 20 25 30 40 50 60	60	80
	Single acting	5 10 15 20	20	-
32	Double acting	5 10 15 20 25 30 40 50 60	60	80
	Single acting	5 10 15 20	20	-

Note) 1. Please contact the company for other special strokes.
2. The dimensions of non-std stroke cylinder has the same dimensions as the next longer stroke std. stroke cylinder. e.g. 23mm stroke cylinder has the same dimensions of 25 std. stroke cylinder.

Symbol

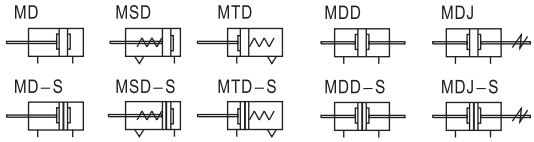

Product feature

1. Manufactured by our enterprise.
2. There are several ways to fix the cylinder and it is convenient to install and use.
3. Several cylinders can be assembled together to effectively save the installation space.
4. The guide precision of piston rod is high and no additional lubricant is needed.
5. Cylinders of various specifications are optional.
6. The seal material with high temperature resistance is adopted to guarantee the normal operation of cylinder at 150℃(Option).

Ordering code

MD 32×30 S G
MDD32×30 S G
MDJ 32×30-30 S G

Model
- MD: Multi-mount cylinder(Double acting type)
- MSD: Multi-mount cylinder(Single acting-push type)
- MTD: Multi-mount cylinder(Single acting-pull type)
- MDD: Multi-mount cylinder(Double rod type)
- MDJ: Multi-mount cylinder(Adjustable stroke type)

Thread type ①
- G: G
- T: NPT

Magnet
- Blank: Without magnet
- S: With magnet

Bore size
6 10 16 20 25 32

Stroke
Refer to stroke table for details

Adjustable stroke

Model	Adjustable stroke
MDJ	10: 10mm
	20: 20mm
	30: 30mm
Others	No this code

① When the thread is standard, the code is blank.

Inner structure and material of major parts

MD-S

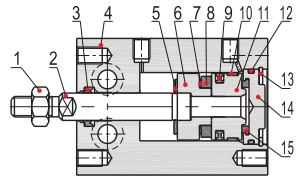

NO.	Item	Material
1	Rod nut	Carbon steel
2	Piston rod	Stainless steel
3	Rod packing	NBR
4	Body	Aluminum alloy
5	Bumper	TPU
6	Magnet holder	Aluminum alloy
7	Magnet washer	NBR
8	Magnet	Sintered metal(Neodymium-iron-boron)
9	Piston seal	NBR
10	Wear ring	Wear resistant material
11	Piston	Aluminum alloy
12	O-ring	NBR
13	C-clip	Spring steel
14	Back cover	Aluminum alloy
15	Bumper	TPU

Dimensions

MD

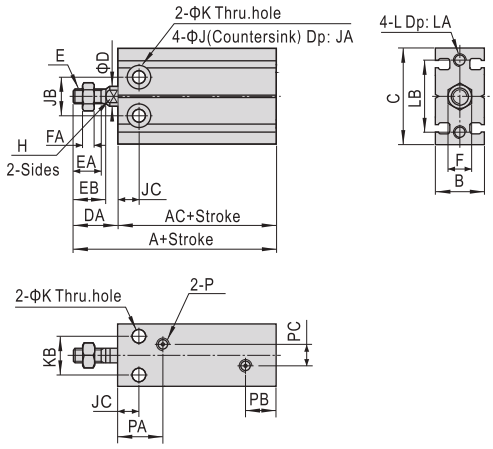

Bore size\Item	A (Without magnet)	AC (Without magnet)	A (With magnet)	AC (With magnet)	B	C	D	DA	E	EA	EB	F
6	46	33	46	33	16.5	22	3	13	M3 × 0.5	7	8	5.5
10	52	36	52	36	16.5	24	4	16	M4 × 0.7	10	11	7
16	46	30	56	40	20	32	6	16	M5 × 0.8	11	12.5	8
20	55	36	65	46	26	40	8	19	M6 × 1.0	12	14	10
25	63	40	73	50	32	50	10	23	M8 × 1.25	15.5	18	12
32	69	42	79	52	40	62	12	27	M10 × 1.25	19.5	22	17

Bore size\Item	FA	H	J	JA	JB	JC	K	KB	L	LA	LB	P	PA	PB	PC
6	2.5	-	6	5	10	7	3.3	7	M3 × 0.5	5	17	M5 × 0.8	14	10	–
10	2	-	6	5.5	11	7	3.3	9	M3 × 0.5	5	18	M5 × 0.8	15.5	10	–
16	4	5	7.5	6.5	14	7	4.5	12	M4 × 0.7	5	25	M5 × 0.8	14.5	10	3
20	5	6	9.5	8	16	9	5.5	16	M5 × 0.8	7.5	30	M5 × 0.8	19	11	9
25	6	8	9.5	9	20	10	5.5	20	M5 × 0.8	8	38	M5 × 0.8	21.5	8.5	12
32	6	10	11	11.5	24	11	6.5	24	M6 × 1.0	9	48	1/8"	23	12.5	13

MSD

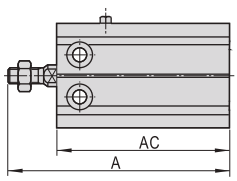

MTD

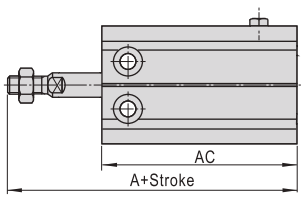

Item	A(Without magnet)				A(With magnet)				AC(Without magnet)				AC(With magnet)			
Bore size\Stroke	5St	10St	15St	20St	5St	10St	15St	20St	5St	10St	15St	20St	5St	10St	15St	20St
6	56	61	71	76	56	61	71	76	43	48	58	63	43	48	58	63
10	62	67	77	82	62	67	77	82	46	51	61	66	46	51	61	66
16	61	66	81	86	71	76	91	96	45	50	65	70	55	60	75	80
20	70	75	90	95	80	85	100	105	51	56	71	76	61	66	81	86
25	78	83	98	103	88	93	108	113	55	60	75	80	65	70	85	90
32	84	89	104	109	94	99	114	119	57	62	77	82	67	72	87	92

Remark) The unmarked dimension is the same as MD standard type.

MDD

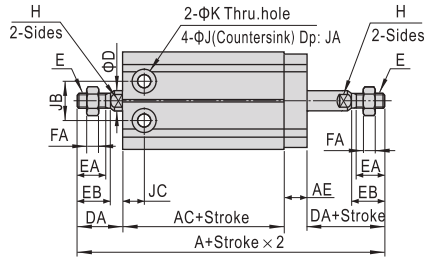

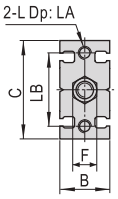

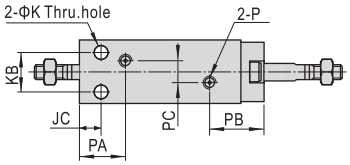

Bore size\Item	A Without magnet	AC Without magnet	A With magnet	AC With magnet	AE	B	C	D	DA	E	EA	EB	F
6	70	38	70	38	6	16.5	22	3	13	M3 × 0.5	7	8	5.5
10	74	36	74	36	6	16.5	24	4	16	M4 × 0.7	10	11	7
16	69.5	30	79.5	40	7.5	20	32	6	16	M5 × 0.8	11	12.5	8
20	83	36	93	46	9	26	40	8	19	M6 × 1.0	12	14	10
25	95	40	105	50	9	32	50	10	23	M8 × 1.25	15.5	18	12
32	106	42	116	52	10	40	62	12	27	M10 × 1.25	19.5	22	17

Bore size\Item	FA	H	J	JA	JB	JC	K	KB	L	LA	LB	P	PA	PB	PC
6	2.5	-	6	5	10	7	3.3	7	M3 × 0.5	5	17	M5 × 0.8	14	16	–
10	2	-	6	5.5	11	7	3.3	9	M3 × 0.5	5	18	M5 × 0.8	15.5	16	–
16	4	5	7.5	6.5	14	7	4.5	12	M4 × 0.7	5	25	M5 × 0.8	14.5	17.5	3
20	5	6	9.5	8	16	9	5.5	16	M5 × 0.8	7.5	30	M5 × 0.8	19	20	9
25	6	8	9.5	9	20	10	5.5	20	M5 × 0.8	8	38	M5 × 0.8	21.5	17.5	12
32	6	10	11	11.5	24	11	6.5	24	M6 × 1.0	9	48	1/8"	23	22.5	13

MDJ

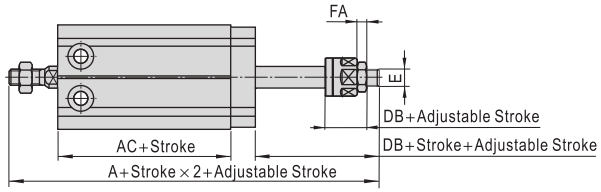

Bore size\Item	A(Without magnet)	A(With magnet)	AC(Without magnet)	AC(With magnet)	DB	E	FA
6	70	70	38	38	13	M3 × 0.5	2.5
10	73	73	36	36	15	M4 × 0.7	2
16	70.5	80.5	30	40	17	M5 × 0.8	4
20	85	95	36	46	21	M6 × 1.0	5
25	97	107	40	50	25	M8 × 1.25	6
32	106	116	42	52	27	M10 × 1.25	6

Remark) The unmarked dimension is the same as MD standard type.

Specification

Bore size(mm)		6	10	16	20	25	32
Acting type	MK, MKD, MKJ	Double acting					
	MSK, MTK	Single acting-Push type, Single acting-Pull type					
Fluid		Air(to be filtered by 40 μ m filter element)					
Operating pressure	Double acting	0.1~1.0MPa(14~145psi)					
	Single acting	0.2~1.0MPa(28~145psi)					
Proof pressure		1.5MPa(215psi)					
Temperature ℃		-20~80					
Speed range mm/s		Double acting: 30~500 Single acting: 50~500					
Stroke tolerance		$^{+1.0}_{0}$					
Cushion type		Bumper					
Port size ①		M5×0.8					1/8"

① G thread and NPT thread are available. Add) Refer to P381~402 for detail of sensor switch.

Stroke

Bore size (mm)		Standard stroke (mm)	Max. std stroke	Max. stroke
6	Double acting	5 10 15 20 25 30 35	35	40
	Single acting	5 10 15 20	20	-
10	Double acting	5 10 15 20 25 30 35	35	40
	Single acting	5 10 15 20	20	-
16	Double acting	5 10 15 20 25 30 40 50	50	70
	Single acting	5 10 15 20	20	-
20	Double acting	5 10 15 20 25 30 40 50 60	60	80
	Single acting	5 10 15 20	20	-
25	Double acting	5 10 15 20 25 30 40 50 60	60	80
	Single acting	5 10 15 20	20	-
32	Double acting	5 10 15 20 25 30 40 50 60	60	80
	Single acting	5 10 15 20	20	-

Note) 1. Please contact the company for other special strokes.
2. The dimensions of non-std stroke cylinder has the same dimensions as the next longer stroke std. stroke cylinder. e.g. 23mm stroke cylinder has the same dimensions of 25 std. stroke cylinder.

Symbol

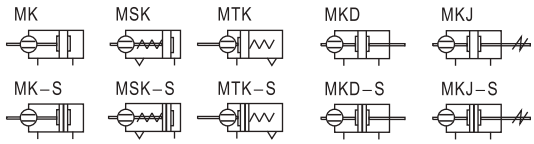

Product feature

1. Manufactured by our enterprise.
2. There are several fixation ways for the cylinder, and also convenient to install and use.
3. Several cylinders can be assembled together to effectively save the installation space.
4. The guide precision of piston rod is high and no additional lubricant is needed.
5. Fixated block is attached to piston rod, which prevents it from rotating.
6. Various cylinders are available for your choice.
7. The seal material with high temperature resistance is adopted to guarantee the normal operation of cylinder at 150℃(Option).

Ordering code

MK 32×30 S G
MKD 32×30 S G
MKJ 32×30-30 S G

Model
- MK: Multi-mount cylinder (Double acting no-rotating type)
- MSK: Multi-mount cylinder (Single acting-push no-rotating type)
- MTK: Multi-mount cylinder (Single acting-pull no-rotating type)
- MKD: Multi-mount cylinder (Double rod no-rotating type)
- MKJ: Multi-mount cylinder (Adjustable stroke no-rotating type)

Bore size
6 10 16 20 25 32

Stroke
Refer to stroke table for details

Thread type ①
- G: G
- T: NPT

Magnet
- Blank: Without magnet
- S: With magnet

Adjustable stroke

Model	Adjustable stroke
MKJ	10: 10mm
	20: 20mm
	30: 30mm
Others	No this code

① When the thread is standard, the code is blank.

Inner structure and material of major parts

MK-S

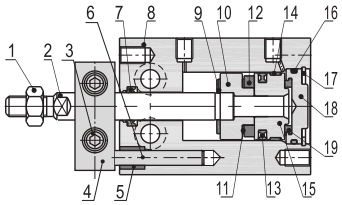

NO.	Item	Material
1	Rod nut	Carbon steel
2	Piston rod	Stainless steel
3	Screw	Carbon steel
4	No-rotating plate	Aluminum alloy
5	Bushing	Brass
6	Fixed rod	Stainless steel
7	Rod packing	NBR
8	Body	Aluminum alloy
9	Bumper	TPU
10	Magnet holder	Aluminum alloy
11	Magnet washer	NBR
12	Magnet	Sintered metal(Neodymium-iron-boron)
13	Piston seal	NBR
14	Wear ring	Wear resistant material
15	Piston	Aluminum alloy
16	O-ring	NBR
17	C-clip	Spring steel
18	Back cover	Aluminum alloy
19	Bumper	TPU

MD,MK

Dimensions

MK

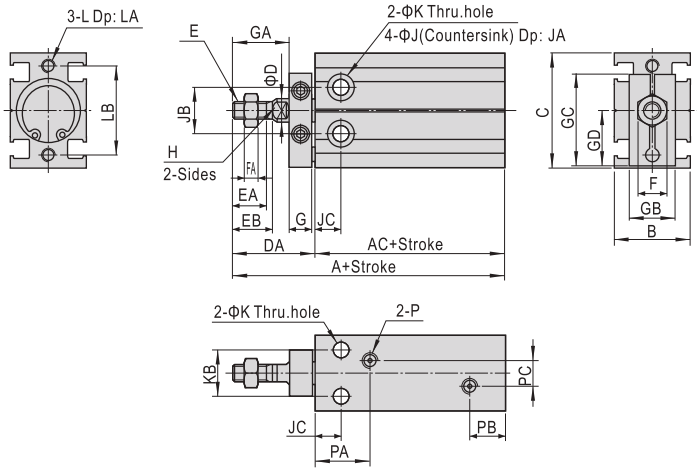

Bore size\Item	A(Without magnet)	A(With magnet)	AC(Without magnet)	AC(With magnet)	B	C
6	51	51	33	33	16.5	22
10	57	57	36	36	16.5	24
16	56	66	30	40	20	32
20	65	75	36	46	26	40
25	73	83	40	50	32	50
32	84	94	42	52	40	62

Bore size\Item	D	DA	E	EA	EB	F	FA	G	GA	GB	GC	GD	H	J	JA
6	3	18	M3 × 0.5	7	8	5.5	2.5	8	9	11	19	10.9	-	6	5
10	4	21	M4 × 0.7	10	11	7	2	8	12	13	20.5	11.9	-	6	5.5
16	6	26	M5 × 0.8	11	12.5	8	4	8	17	13	26.5	15.9	5	7.5	6.5
20	8	29	M6 × 1.0	12	14	10	5	8	20	16	32	19.8	6	9.5	8
25	10	33	M8 × 1.25	15.5	18	12	6	10	22	19	40	24.8	8	9.5	9
32	12	42	M10 × 1.25	19.5	22	17	6	12	29	24	49	30.8	10	11	11.5

Bore size\Item	JB	JC	K	KB	L	LA	LB	P	PA	PB	PC
6	10	7	3.3	7	M3 × 0.5	5	17	M5 × 0.8	14	10	–
10	11	7	3.3	9	M3 × 0.5	5	18	M5 × 0.8	15.5	10	–
16	14	7	4.5	12	M4 × 0.7	5	25	M5 × 0.8	14.5	10	3
20	16	9	5.5	16	M5 × 0.8	7.5	30	M5 × 0.8	19	11	9
25	20	10	5.5	20	M5 × 0.8	8	38	M5 × 0.8	21.5	8.5	12
32	24	11	6.5	24	M6 × 1.0	9	48	1/8"	23	12.5	13

MSK

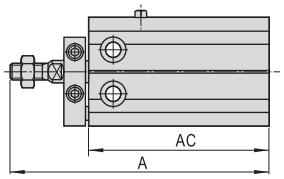

MTK

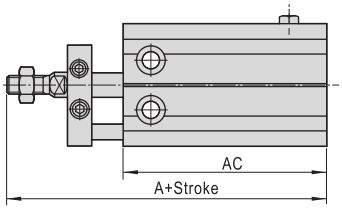

Item	A(Without magnet)				A(With magnet)				AC(Without magnet)				AC(With magnet)			
Bore size\Stroke	5St	10St	15St	20St	5St	10St	15St	20St	5St	10St	15St	20St	5St	10St	15St	20St
6	61	66	76	81	61	66	76	81	43	48	58	63	43	48	58	63
10	67	72	82	87	67	72	82	87	46	51	61	66	46	51	61	66
16	71	76	91	96	81	86	101	106	45	50	65	70	55	60	75	80
20	80	85	100	105	90	95	110	115	51	56	71	76	61	66	81	86
25	88	93	108	113	98	103	118	123	55	60	75	80	65	70	85	90
32	99	104	119	124	109	114	129	134	57	62	77	82	67	72	87	92

Remark) The unmarked dimension is the same as MK standard type.

MKD

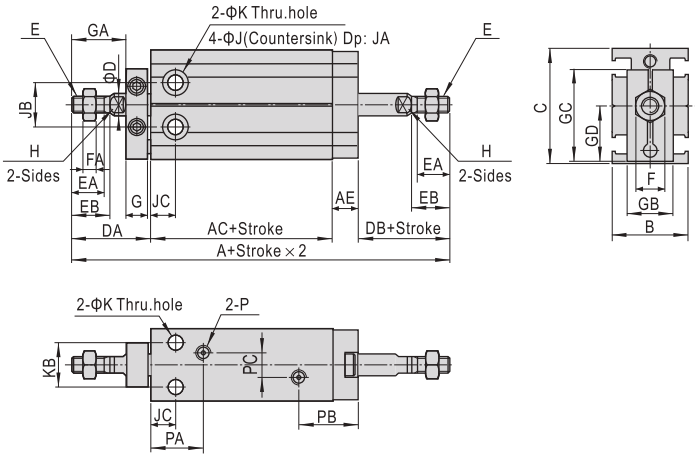

MKJ

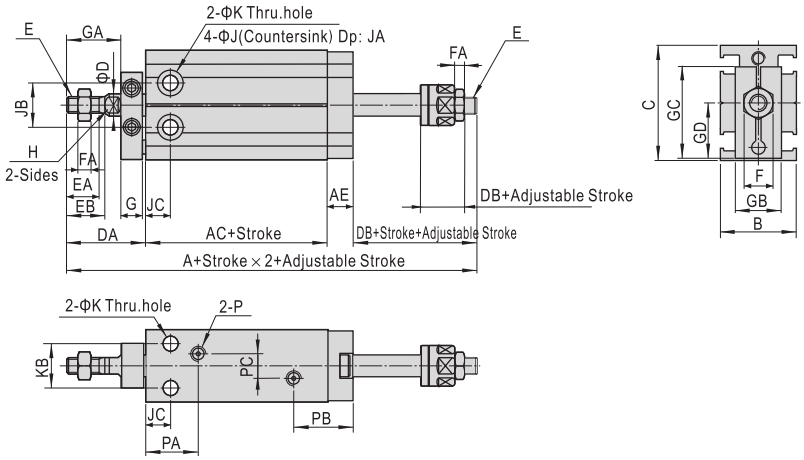

Bore size\Item	A(Without magnet)		A(With magnet)		AC(Without magnet)	AC(With magnet)	AE	B	C	D	DA	DB	
	MKD	MKJ	MKD	MKJ								MKD	MKJ
6	75	75	75	75	38	38	6	16.5	22	3	18	13	13
10	79	78	79	78	36	36	6	16.5	24	4	21	16	14.7
16	79.5	80.5	89.5	90.5	30	40	7.5	20	32	6	26	16	17
20	93	95	103	105	36	46	9	26	40	8	29	19	21
25	105	107	115	117	40	50	9	32	50	10	33	23	25
32	121	121	131	131	42	52	10	40	62	12	42	27	27

Bore size\Item	E	EA	EB	F	FA	G	GA	GB	GC	GD	H	J	JA	JB
6	M3 × 0.5	7	8	5.5	2.5	8	9	11	19	10.9	-	6	5	10
10	M4 × 0.7	10	11	7	2	8	12	13	20.5	11.9	-	6	5.5	11
16	M5 × 0.8	11	12.5	8	4	8	17	13	26.5	15.9	5	7.5	6.5	14
20	M6 × 1.0	12	14	10	5	8	20	16	32	19.8	6	9.5	8	16
25	M8 × 1.25	15.5	18	12	6	10	22	19	40	24.8	8	9.5	9	20
32	M10 × 1.25	19.5	22	17	6	12	29	24	49	30.8	10	11	11.5	24

Bore size\Item	JC	K	KB	P	PA	PB	PC
6	7	3.3	7	M5 × 0.8	14	16	–
10	7	3.3	9	M5 × 0.8	15.5	16	–
16	7	4.5	12	M5 × 0.8	14.5	17.5	3
20	9	5.5	16	M5 × 0.8	19	20	9
25	10	5.5	20	M5 × 0.8	21.5	17.5	12
32	11	6.5	24	1/8"	23	22.5	13

Product series

Series	Acting type	Bore size	Collocation of sensor switch
Double acting type: MU	Double acting	6 8 10	DS1–H DS1–HL 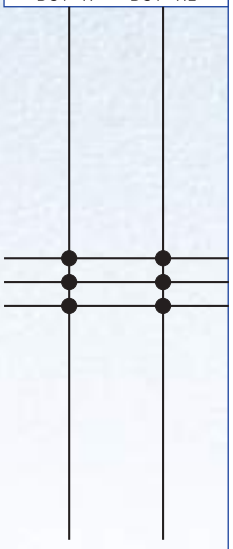
Single acting-push: MSU	Single acting		
Page 230			381

Installation and application

1. When load changes in the work, the cylinder with abundant output capacity shall be selected.
2. Relative cylinder with high temperature resistance or corrosion resistance shall be chosen under the condition of high temperature or corrosion.
3. Necessary protection measure shall be taken in the environment with higher humidity, much dust or water drops, oil dust and welding dregs.
4. Dirty substances in the pipe must be eliminated before cylinder is connected with pipeline to prevent the entrance of particles into the cylinder.
5. The medium used by cylinder shall be filtered to 40 μ m or below.
6. As both of the front cover and piston of the cylinder are short, typically too large stroke can not be selected.
7. Anti-freezing measure shall be adopted under low temperature environment to prevent moisture freezing.
8. The cylinder shall avoid the influence of side load in operation to maintain the normal work of cylinder and extend the service life.
9. If the cylinder is dismantled and stored for a long time, please conduct anti-rust treatment to the surface. Anti-dust caps shall be added in air inlet and outlet ports. The front and back cover can not be dismantled, which shall be especially noticed.

Criteria for selection: Cylinder thrust

Unit：Newton(N)

Bore size (mm)	Rod size (mm)	Acting type		Pressure area (mm^2)	Operating pressure(MPa) 0.1	0.2	0.3	0.4	0.5	0.6	0.7
6	4	Single acting-Push side		28.3	-	-	5.1	7.9	10.7	13.5	16.4
		Double acting	Push side	28.3	-	5.7	8.5	11.3	14.2	17.0	19.8
			Pull side	15.7	-	3.1	4.7	6.3	7.9	9.4	11.0
8	5	Single acting-Push side		50.3	-	-	8.3	13.4	18.4	23.4	28.5
		Double acting	Push side	50.3	-	10.1	15.1	20.1	25.2	30.2	35.2
			Pull side	30.6	-	6.1	9.2	12.2	15.3	18.4	21.4
10	6	Single acting-Push side		78.5	-	8.7	16.5	24.4	32.2	40.1	47.9
		Double acting	Push side	78.5	7.9	15.7	23.6	31.4	39.3	47.1	55.0
			Pull side	50.3	5.0	10.1	15.1	20.1	25.2	30.2	35.2

Specification

Bore size(mm)		6	8	10
Acting type		MU：Double acting MSU：Single acting-Push type		
Fluid		Air(to be filtered by 40 μ m filter element)		
Operating pressure	Double acting	0.15~0.7MPa(22~100psi)		0.1~0.7MPa(14~100psi)
	Single acting	0.3~0.7MPa(44~100psi)		0.2~0.7MPa(29~100psi)
Proof pressure		1.05MPa(150psi)		
Temperature ℃		-20~80		
Speed range mm/s		Double acting: 30~500		Single acting: 50~500
Stroke tolerance		$^{+1.0}_{0}$		
Cushion type		No		
Port size		M3 × 0.5		

Add) Refer to P381~402 for detail of sensor switch.

Stroke

Bore size (mm)		Standard stroke (mm)	Max. std stroke
6	Double acting	4 6 8 10 15 20 25 30	30
	Single acting	4 6 8	8
8	Double acting	4 6 8 10 15 20 25 30	30
	Single acting	4 6 8 10	10
10	Double acting	4 6 8 10 15 20 25 30	30
	Single acting	4 6 8 10	10

Note) 1. Please contact the company for other special strokes.
2. The dimensions of non-std stroke cylinder has the same dimensions as the next longer stroke std. stroke cylinder. e.g. 23mm stroke cylinder has the same dimensions of 25 std. stroke cylinder.

Symbol

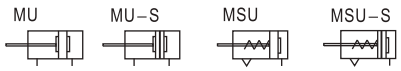

Product feature

1. JIS standard is implemented.
2. Cylinder can be mounted from 4 directions, and convenient to install and use.
3. Multitudinous cylinder can be mounted side by side to save space.
4. The front end of the cylinder is designed with boss. Centering can be done easily.
5. The internal diameter of the body is treated with rolling followed by the treatment of hard anodizing, forming an excellent abrasion resistance and durability.
6. With magnet type is of the feature of position sensing.
7. There are magnetic switch slots around the cylinder body, which is convenient to install inducting switch.
8. The seal of piston adopts heterogeneous two-way seal structure. It has compact dimension and the function of grease reservation.

Ordering code

MU 8 × 10 S □

MSU 8 × 10 S □

Model
MU: Mini free mount cylinder (double acting)
MSU: Mini free mount cylinder (single acting-push)

Rod type
Blank: Female thread
B: Male thread

Magnet
Blank: Without magnet
S: With magnet

Bore size
6 8 10

Stroke
Refer to stroke table for details

Mounting type

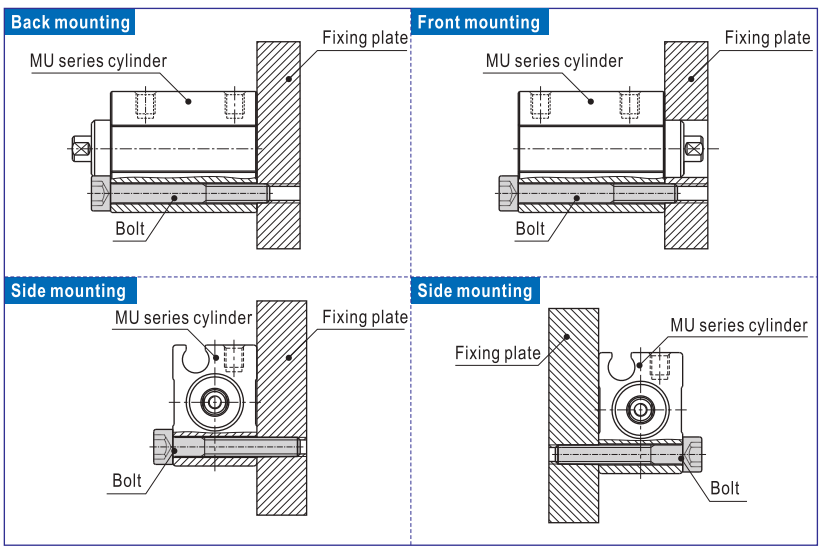

Inner structure and material of major parts

MU-S

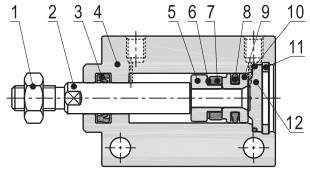

MSU-S

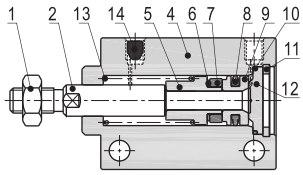

NO.	Item	Material
1	Rod nut	Stainless steel
2	Piston rod	Stainless steel
3	O-ring	NBR
4	Body	Aluminum alloy
5	Magnet holder	Brass
6	Magnet washer	NBR
7	Magnet	Sintered metal (Neodymium-iron-boron)
8	Piston seal	NBR
9	Piston	Brass
10	O-ring	NBR
11	C clip	Spring steel
12	Back cover	Aluminum alloy
13	Spring	Spring steel
14	Silencer	Agglomerated by brass grain

Dimensions

Model: MU\MU-S\MSU\MSU-S

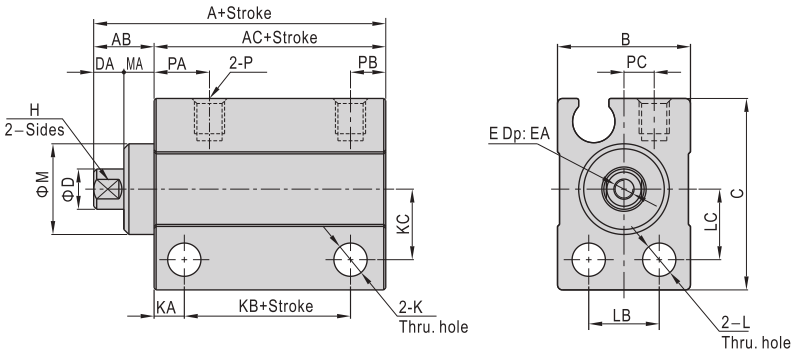

Bore size\Item	A	AC	A	AC	AB	B	C	D		DA	E	EA	H
	With magnet		Without magnet					MU	MSU				
6	24	18	19	13	6	13	19	4	3.5	3	M2.5×0.45	5	3.5
8	24	18	19	13	6	13	21	5		3	M3×0.5	6	4.5
10	24	18	19	13	6	13.5	22	6		3	M3×0.5	6	5

Bore size\Item	K	KA	KB		KC	L	LB	LC	M	MA	P	PA	PB	PC
			With magnet	Without magnet										
6	3.3	3	11.5	6.5	7	3.3	7	7	9	3	M3×0.5	5.5	3.5	3
8	3.3	3	11.5	6.5	8	3.3	7	8	11	3	M3×0.5	5.5	3.5	3
10	3.3	3	11.5	6.5	8.5	3.3	7	8.5	12	3	M3×0.5	5.5	3.5	3.5

Model: MU-B\MU-S-B\MSU-B\MSU-S-B

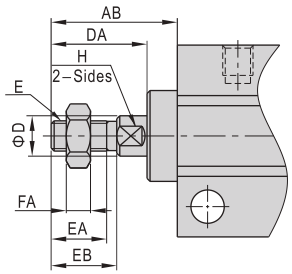

Bore size\Item	AB	D(MU)	D(MSU)	DA	E	EA	EB	FA	H
6	12.5	4	3.5	9.5	M3×0.5	5.5	6.5	2.4	3.5
8	14.5	5	5	11.5	M4×0.7	7	8.5	3	4.5
10	16.5	6	6	13.5	M5×0.8	9	10.5	4	5

Product series

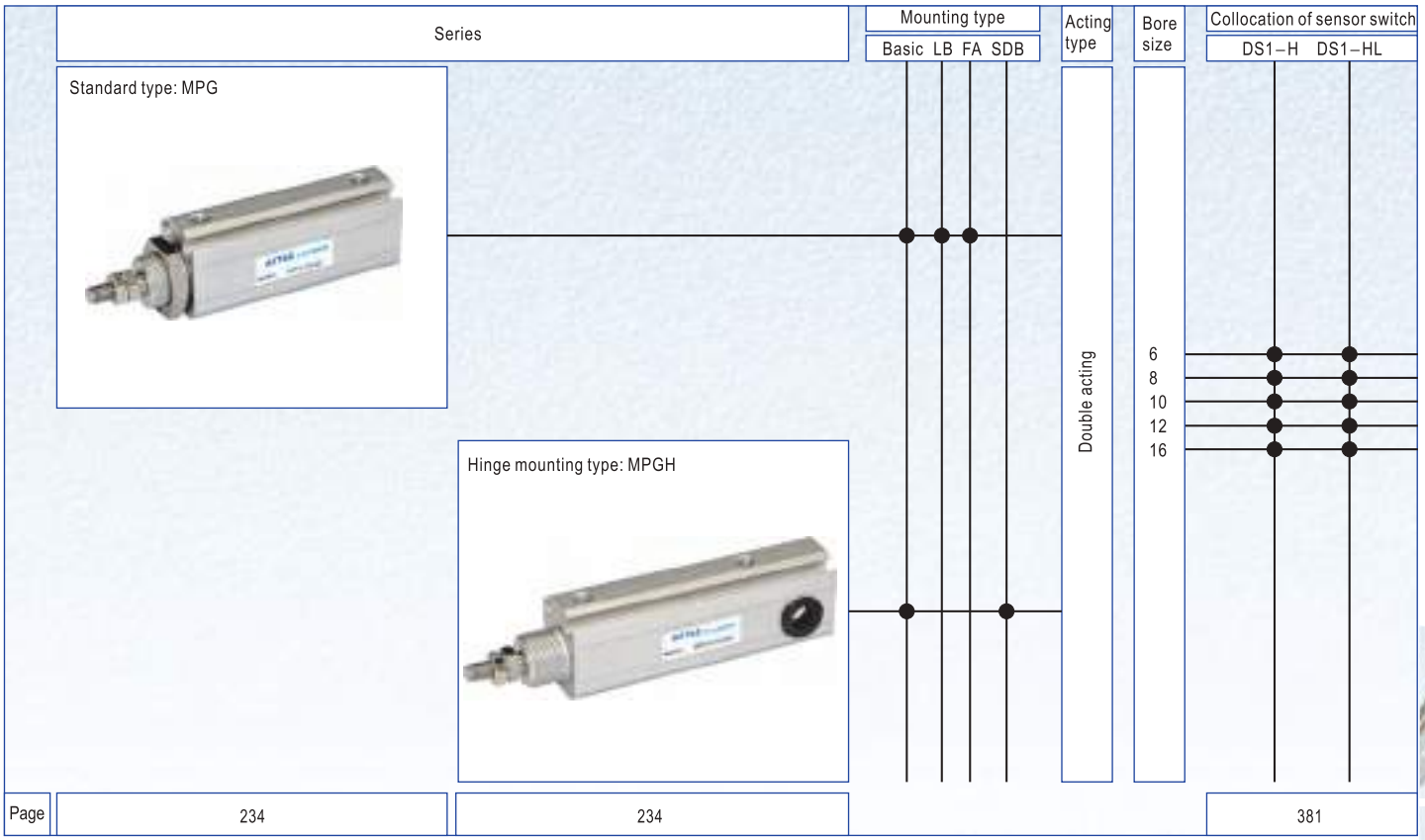

Installation and application

1. When load changes in the work, the cylinder with abundant output capacity shall be selected.
2. Relative cylinder with high temperature resistance or corrosion resistance shall be chosen under the condition of high temperature or corrosion.
3. Necessary protection measure shall be taken in the environment with higher humidity, much dust or water drops, oil dust and welding dregs.
4. Dirty substances in the pipe must be eliminated before cylinder is connected with pipeline to prevent the entrance of particles into the cylinder.
5. The medium used by cylinder shall be filtered to 40 μ m or below.
6. As both of the front cover and piston of the cylinder are short, typically too large stroke can not be selected.
7. Anti-freezing measure shall be adopted under low temperature environment to prevent moisture freezing.
8. The cylinder shall avoid the influence of side load in operation to maintain the normal work of cylinder and extend the service life.
9. If the cylinder is dismantled and stored for a long time, please conduct anti-rust treatment to the surface. Anti-dust caps shall be added in air inlet and outlet ports. The front and back cover can not be dismantled, which shall be especially noticed.

Criteria for selection: Cylinder thrust

Unit: Newton(N)

Model	Bore size (mm)	Rod size (mm)	Acting type		Pressure area (mm^2)	Operating pressure(MPa) 0.1	0.2	0.3	0.4	0.5	0.6	0.7
MPG MPGH	6	3	Double acting	Push side	28.3	2.8	5.7	8.5	11.3	14.2	17.0	19.8
				Pull side	21.2	2.1	4.2	6.4	8.5	10.6	12.7	14.8
	8	4	Double acting	Push side	50.3	5.0	10.1	15.1	20.1	25.2	30.2	35.2
				Pull side	37.7	3.8	7.5	11.3	15.1	18.9	22.6	26.4
	10	4	Double acting	Push side	78.5	7.9	15.7	23.6	31.4	39.3	47.1	55.0
				Pull side	65.9	6.6	13.2	19.8	26.4	33.0	39.5	46.1
	12	6	Double acting	Push side	113.0	11.3	22.6	33.9	45.2	56.5	67.8	79.1
				Pull side	84.7	8.5	17.0	25.4	33.9	42.4	50.8	59.3
	16	6	Double acting	Push side	201.0	20.1	40.2	60.3	80.4	100.5	120.6	140.7
				Pull side	172.7	17.3	34.5	51.8	69.1	86.4	103.6	120.9

Specification

Bore size(mm)	6	8	10	12	16
Acting type	Double acting				
Fluid	Air(to be filtered by 40 μ m filter element)				
Operating pressure	0.1~0.7MPa(15~100psi)				
Proof pressure	1.05MPa(150psi)				
Mounting type	Basic FA LB SDB				
Temperature ℃	-20~80				
Speed range mm/s	30~500				
Stroke tolerance	$^{+1.0}_{0}$				
Cushion type	Bumper				
Port size	M3 × 0.5			M5 × 0.8	

Add) Refer to P381~402 for detail of sensor switch.

Stroke

Bore size (mm)	Standard stroke (mm)	Max. std stroke
6	5 10 15 20 25	25
8	5 10 15 20 25 30 35 40	40
10	5 10 15 20 25 30 35 40	40
12	5 10 15 20 25 30 35 40	40
16	5 10 15 20 25 30 35 40	40

Note) Consult us for non-standard stroke.

Symbol

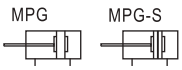

Product feature

1. It is compact, small size and light weight. It is easy to install and dismantle.
2. The guide precision of piston rod is high and no additional lubricant is needed.
3. Advanced rubber coating process is applied to the back cover.
4. Mounting accessories with various specifications are optional.
5. With magnet type is of the feature of position sensing.
6. There are magnetic switch slots around the cylinder body, which is convenient to install inducting switch.
7. Cylinders of various specifications are optional.

Ordering code

MPG 10 × 30 S N □

MPGH 10 × 30 S N □

Model

MPG: Standard plate cylinder (double acting)
MPGH: Hinge mounting type cylinder (double acting)

Bore size

6 8 10 12 16

Stroke

Refer to stroke table for details

Magnet

Blank: Without magnet
S: With magnet

Rod type

Blank: Male thread
N: No thread

Mounting type

Model	Mounting type
MPG	Blank
	LB
	FA
MPGH	Blank
	SDB

Inner structure and material of major parts

MPG(Φ8~Φ16)

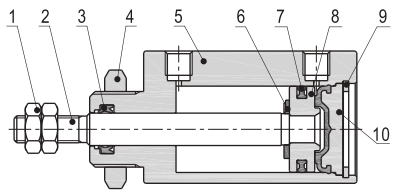

MPG(Φ8~Φ16)-S

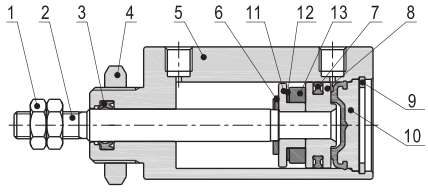

NO.	Item	Material
1	Rod nut	Stainless steel
2	Piston rod	Stainless steel
3	Front cover packing	NBR
4	Front cover nut	Carbon steel
5	Body	Aluminum alloy
6	Bumper	TPU
7	Piston seal	NBR
8	Piston	Brass(Others) Aluminum alloy(Φ16)
9	clip	Spring steel
10	Back cover	Aluminum alloy & Rubber
11	Magnet holder	Φ6: Stainless steel
		Φ8~Φ12: Brass
		Φ16: Aluminum alloy
12	Magnet washer	NBR
13	Magnet	Sintered metal (Neodymium-iron-boron)

Installation and application

1. Select the plate width and tightening torque of the front cover thread according to the table below:

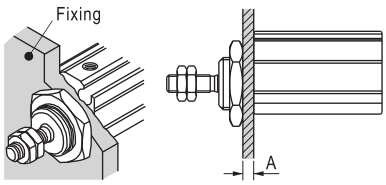

Bore size	Front cover thread	Maximum allowable torque(N.m)	Maximum width(A)
6	M10 × 1.0	12.5	4
8	M12 × 1.0	21.0	4
10	M12 × 1.0	21.0	4
12	M14 × 1.0	34.0	5
16	M14 × 1.0	34.0	5

2. The extra torque produced by the load at the piston rod end cannot exceed the allowable value specified in the table below. Otherwise may cause damage to the cylinder or reduce the service life.

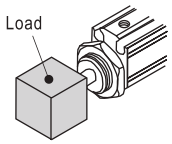

Bore size	Piston rod thread	Maximum allowable torque(N.m)
6	M3 × 0.5	0.3
8	M4 × 0.7	0.8
10	M4 × 0.7	0.8
12	M5 × 0.8	1.6
16	M5 × 0.8	1.6

3. Allowable Rod End Lateral Load

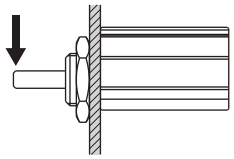

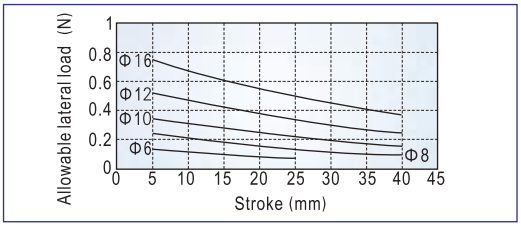

Dimensions

Model: MPG/MPG-S

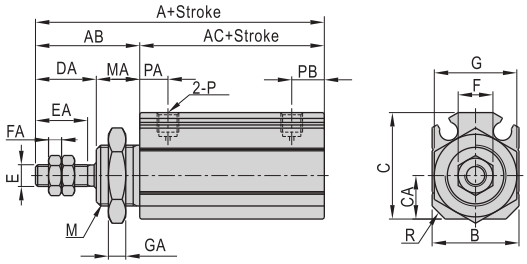

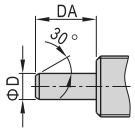

Piston rod without thread

Bore size\Item	A		AB	AC		B	C	CA	D	DA
	Without magnet	With magnet		Without magnet	With magnet					
6	33	38	17	16	21	14	16.5	6	3	9
8	38	43	20	18	23	14.5	17.5	7	4	12
10	39.5	44.5	20	19.5	24.5	15	19	7	4	12
12	43.5	48.5	24	19.5	24.5	17	21.5	8.5	6	14
16	43.5	48.5	24	19.5	24.5	20	24.5	10	6	14

Bore size\Item	E	EA	F	FA	G	GA	M	MA	P	PA	PB	R
6	M3 × 0.5	7	5.5	2.4	13	3	M10 × 1.0	8	M3 × 0.5	5.5	6.5	2
8	M4 × 0.7	10	7	2.2	17	3	M12 × 1.0	8	M3 × 0.5	6	7	2
10	M4 × 0.7	10	7	2.2	17	3	M12 × 1.0	8	M3 × 0.5	6	7	2.5
12	M5 × 0.8	12	8	3	19	4	M14 × 1.0	10	M5 × 0.8	6.5	7.5	2.5
16	M5 × 0.8	12	8	3	19	4	M14 × 1.0	10	M5 × 0.8	6.5	7.5	3

Model: MPGH\MPGH-S

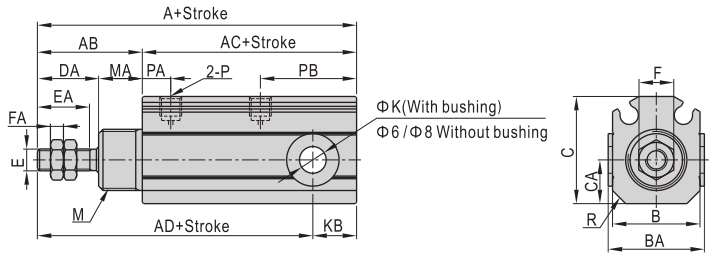

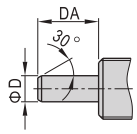

Piston rod without thread

Bore size\Item	A	AC	AD	A	AC	AD	AB	B	BA	C	CA	D	DA
	Without magnet			With magnet									
6	38	21	34	43	26	39	17	14	–	16.5	6	3	9
8	46	26	41	51	31	46	20	14.5	–	17.5	7	4	12
10	50.5	30.5	44	55.5	35.5	49	20	15	17	19	7	4	12
12	58	34	48	63	39	53	24	17	19	21.5	8.5	6	14
16	58	34	48	63	39	53	24	20	22	24.5	10	6	14

Bore size\Item	E	EA	F	FA	K	KB	M	MA	P	PA	PB	R
6	M3 × 0.5	7	5.5	2.4	$3^{+0.05}_{0}$	4	M10 × 1.0	8	M3 × 0.5	5.5	11.5	2
8	M4 × 0.7	10	7	2.2	$4^{+0.05}_{0}$	5	M12 × 1.0	8	M3 × 0.5	6	15	2
10	M4 × 0.7	10	7	2.2	$5^{+0.065}_{0}$	6.5	M12 × 1.0	8	M3 × 0.5	6	18	2.5
12	M5 × 0.8	12	8	3	$6^{+0.065}_{0}$	10	M14 × 1.0	10	M5 × 0.8	6.5	22	2.5
16	M5 × 0.8	12	8	3	$6^{+0.065}_{0}$	10	M14 × 1.0	10	M5 × 0.8	6.5	22	3

MPG

Ordering code

F-MPG 10 FA

- Accessory
- Model
- Bore size
- Accessory type ①

Mounting accessory	LB: LB type
	FA: FA type
	SDB: SDB type ②
Knuckle	FC: Rubber bumper (flat head)
	RC: Rubber bumper (ball head)

① Please refer to accessory list for selection and ordering information.
② SDB is attached with relevant PIN.

Accessory selection

Accessories\Cylinder model		MPG		MPGH	
		Without magnet	With magnet	Without magnet	With magnet
Mounting accessory	LB	●	●	×	×
	FA	●	●	×	×
	SDB	×	×	●	●
Knuckle	FC	●	●	●	●
	RC	●	●	●	●
	I ①	●	●	●	●
	Y	●	●	●	●
Sensor switch ②	DS1-H	×	●	×	●
	DS1-HL	×	●	×	●

① Please refer to P377~380 for I knuckle and Y knuckle detail,
② Please refer to P381~402 for detail of sensor switch.

Material of accessories

Accessories / Bore size	Mounting accessories			Knuckle			
	LB	FA	SDB	FC	RC	I	Y
6~16	△	△	△	□	□	◇	◇

△——SPCC；□——POM；◇——Cast iron。

MPG

List for ordering code of accessories

Accessories / Bore size	Mounting accessories		
	LB	FA	SDB
6	F-MPG6LB	F-MPG6FA	F-MPG6SDB
8	F-MPG10LB	F-MPG10FA	F-MPG8SDB
10			F-MPG10SDB
12	F-MPG16LB	F-MPG16FA	F-MPG12SDB
16			F-MPG16SDB

Accessories / Bore size	Knuckle	
	FC: Rubber bumper (flat head)	RC: Rubber bumper (ball head)
6	F-MPG6FC	F-MPG6RC
8	F-MPG10FC	F-MPG10RC
10		
12	F-MPG16FC	F-MPG16RC
16		

Accessories / Bore size	Knuckle		Sensor switch	
	I：I Knuckle	Y：Y Knuckle	DS1-H□	DS1-HL□
6	F-M3×050I	F-M3×050Y	DS1-H□	DS1-HL□
8	F-M4×070I	F-M4×070Y		
10				
12	F-M5×080I	F-M5×080Y		
16				

Model: FC/RC

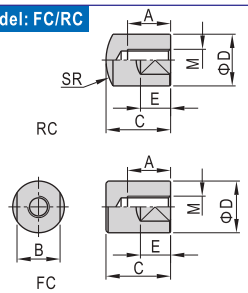

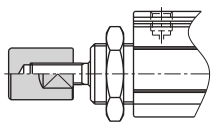

Bore size\Item	A	B	C	D	E	M	SR
6	6	6	11	8	5	M3×0.5	8
8	8	8	13	10	6	M4×0.7	10
10	8	8	13	10	6	M4×0.7	10
12	10	10	15	12	7	M5×0.8	12
16	10	10	15	12	7	M5×0.8	12

Dimensions

Model: LB

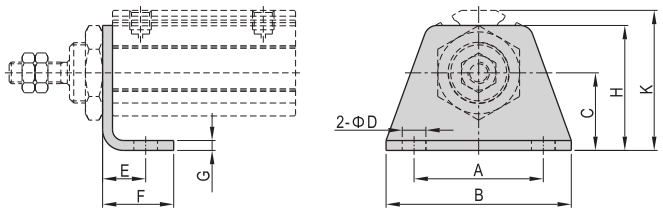

Bore size\Item	A	B	C	D	E	F	G	H	K
6	20	28	11	3.4	6.5	10.5	1.6	19	21.5
8	24	33	13	4.5	7	12	1.6	22	23.5
10	24	33	13	4.5	7	12	1.6	22	25
12	30	43	18	5.5	10	16.5	2.3	29	31
16	30	43	18	5.5	10	16.5	2.3	29	32.5

Model: FA

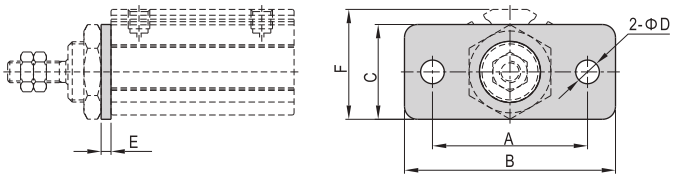

Bore size\Item	A	B	C	D	E	F
6	24	32	16	3.4	1.6	18.5
8	28	37	18	4.5	1.6	19.5
10	28	37	18	4.5	1.6	21
12	36	49	22	5.5	2.3	24
16	36	49	22	5.5	2.3	25.5

Model: SDB

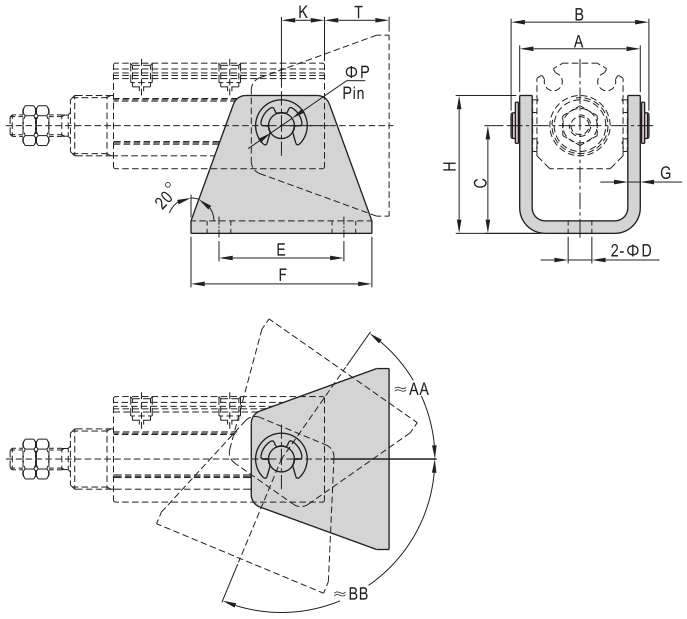

Bore size\Item	A	AA*	B	BB*	C	D	E	F	G	H	K	T	P
6	18.5	55°	21.5	110°	16	3.4	18	26	1.6	20	4	12	3
8	19	55°	23	110°	18	4.5	21	30	1.6	23	5	13	4
10	20.5	65°	24.1	110°	20	4.5	24	33	1.6	25.5	6.5	13.5	5
12	25	55°	29	110°	25	5.5	26	39	2.9	32	10	15	6
16	28	55°	32	110°	25	5.5	29	42	2.9	32	10	15	6

*Note: AA and BB are for reference only. Specific value depends on the actual situation.

Product series

Series	Mounting type	Acting type	Bore size
Embedded mounting type: MPEF	Basic	Single acting	6 8 10 12 16
Standard type: MPE			
Page: 238			238

MPE

Installation and application

1. When load changes in the work, the cylinder with abundant output capacity shall be selected.
2. Relative cylinder with high temperature resistance or corrosion resistance shall be chosen under the condition of high temperature or corrosion.
3. Necessary protection measure shall be taken in the environment with higher humidity, much dust or water drops, oil dust and welding dregs.
4. Dirty substances in the pipe must be eliminated before cylinder is connected with pipeline to prevent the entrance of particles into the cylinder.
5. The medium used by cylinder shall be filtered to 40 μ m or below.
6. As both of the front cover and piston of the cylinder are short, typically too large stroke can not be selected.
7. Anti-freezing measure shall be adopted under low temperature environment to prevent moisture freezing.
8. The cylinder shall avoid the influence of side load in operation to maintain the normal work of cylinder and extend the service life.
9. If the cylinder is dismantled and stored for a long time, please conduct anti-rust treatment to the surface. Anti-dust caps shall be added in air inlet and outlet ports. The front and back cover can not be dismantled, which shall be especially noticed.

Criteria for selection: Cylinder thrust

Unit: Newton(N)

Cylinder series	Bore size (mm)	Rod size (mm)	Acting type		Pressure area (mm^2)	Operating pressure(MPa) 0.1	0.2	0.3	0.4	0.5	0.6	0.7
MPE MPEF	6	3	Single acting	Push side	28.3	-	1.8	4.6	7.4	10.3	13.1	15.9
				Pull side	21.2	1.6						
	8	4	Single acting	Push side	50.3	-	4.8	9.8	14.8	19.9	24.9	29.9
				Pull side	37.7	2.7						
	10	5	Single acting	Push side	78.5	-	9.4	17.3	25.1	33.0	40.8	48.7
				Pull side	58.9	2.8						
	12	6	Single acting	Push side	113.0	-	13.3	24.6	35.9	47.2	58.5	69.8
				Pull side	84.7	3.45						
	16	6	Single acting	Push side	201.0	-	29.4	49.5	69.6	89.7	109.8	129.9
				Pull side	172.7	4.8						

Specification

Bore size(mm)	6	8	10	12	16
Acting type	Single acting				
Fluid	Air(to be filtered by 40 μ m filter element)				
Operating pressure	0.2~0.7MPa(28~100psi)		0.15~0.7MPa(22~100psi)		
Proof pressure	1.05MPa(150psi)				
Mounting type	Embedded type, End inlet type				
Temperature ℃	-20~80				
Speed range mm/s	50~500				
Stroke tolerance	$^{+1.0}_{0}$				
Cushion type	No				
Port size	M5 × 0.8				

Stroke

Bore size (mm)	Standard stroke (mm)	Max. std stroke
6	5 10 15	15
8	5 10 15	15
10	5 10 15	15
12	5 10 15	15
16	5 10 15	15

Note： Please contact the company for other special strokes.

Symbol

MPE

Product feature

1. It is compact, small and light.
2. Multi cylinders can be integrated to save room.
3. Mounting accessories are not necessary.
4. Cylinders of various specifications are optional.

Ordering code

MPE 16 × 15 N

MPEF16 × 15 N

Model
- MPE： Standard type(single acting-push)
- MPEF： Embedded type (single acting-push)

Rod type
- Blank: Male thread
- N: No thread

Bore size
- 6 8 10 12 16

Stroke
- Refer to stroke table for details

Inner structure and material of major parts

MPE

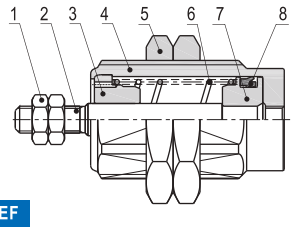

MPEF

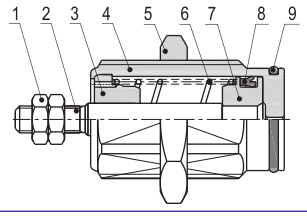

NO.	Item	Material
1	Rod nut	Stainless steel
2	Piston rod	Stainless steel
3	Front cover	Brass
4	Body	Brass (nickel-plated)
5	Body nut	Carbon steel
6	Spring	Spring steel
7	Piston	Stainless steel
8	Piston seal	NBR
9	O-ring	NBR

Mounting and use

1. Select applicable cylinder model and mounting method according to actual situation:

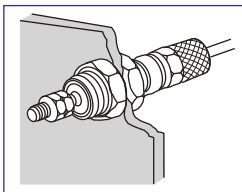

With mounting bracket
(used for MPE type)

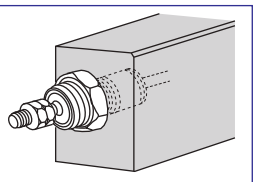

Embedded mounting
(used for MPEF type)

2. MPE series are single acting cylinders. No load is allowed at the piston rod when it is on the retraction state.

3. The force of the spring of the cylinder is for retraction of the piston rod only. The piston rod may not retract to the bottom end if there's any load.

4. Make sure the rod end lateral load is allowable. Otherwise may cause damage to the cylinder or reduce the service life.

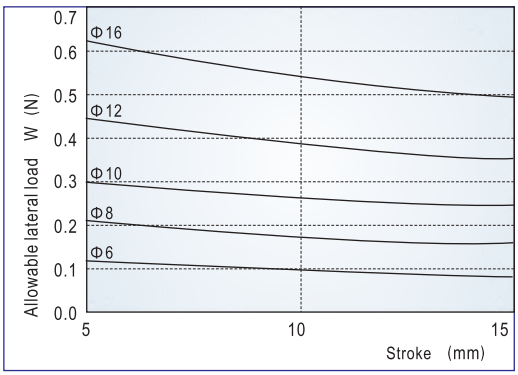

Dimensions

MPE

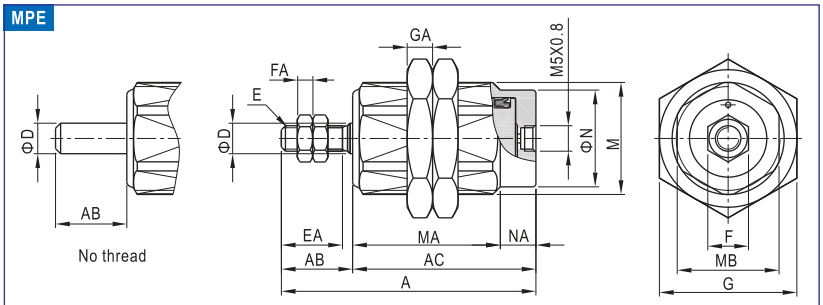

Bore size\Item	A			AB	AC			MA			D	E	EA	F	FA
Stroke	5St	10St	15St		5St	10St	15St	5St	10St	15St					
6	30.5	37.5	44.5	9	21.5	28.5	35.5	15.5	22.5	29.5	3	M3 × 0.5	7	5.5	2.4
8	34.5	41.5	48.5	12	22.5	29.5	36.5	16.5	23.5	30.5	4	M4 × 0.7	10	7	3
10	35	42	49	12	23	30	37	17	24	31	5	M4 × 0.7	10	7	3
12	37.5	43.5	49.5	12	25.5	31.5	37.5	19.5	25.5	31.5	6	M5 × 0.8	10	8	3
16	40.5	46.5	52.5	14	26.5	32.5	38.5	19.5	25.5	31.5	6	M5 × 0.8	12	8	3

Bore size\Item	G	GA	M	MB	N	NA
6	14	4	M10 × 1.0	9	8.5	6
8	17	4	M12 × 1.0	11	10	6
10	19	4	M16 × 1.5	14	12	6
12	24	5	M18 × 1.5	16	15	6
16	27	5	M22 × 1.5	20	19	7

MPEF

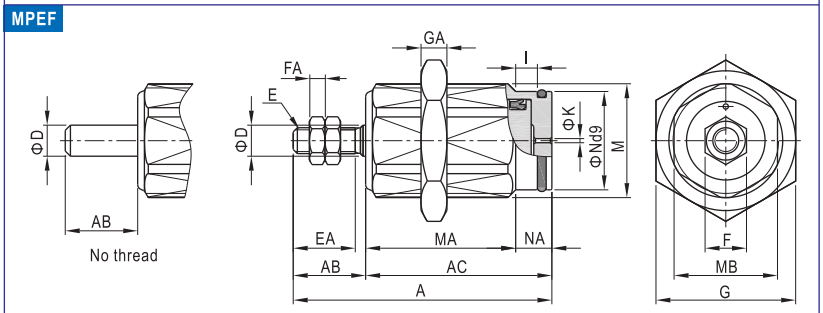

Bore size\Item	A			AB	AC			MA			D	E	EA	F	FA
Stroke	5St	10St	15St		5St	10St	15St	5St	10St	15St					
6	28	35	42	9	19	26	33	13	20	27	3	M3 × 0.5	7	5.5	2.4
8	32	39	46	12	20	27	34	14	21	28	4	M4 × 0.7	10	7	3
10	32.5	39.5	46.5	12	20.5	27.5	34.5	14.5	21.5	28.5	5	M4 × 0.7	10	7	3
12	35	41	47	12	23	29	35	17	23	29	6	M5 × 0.8	10	8	3
16	38	44	50	14	24	30	36	17	23	29	6	M5 × 0.8	12	8	3

Bore size\Item	G	GA	I	M	MB	N	NA	K
6	14	4	3.5	M10 × 1.0	9	8.5	6	0.8
8	17	4	3.5	M12 × 1.0	11	10	6	0.8
10	19	4	3.3	M16 × 1.5	14	12	6	1
12	24	5	3	M18 × 1.5	16	15	6	1.3
16	27	5	4	M22 × 1.5	20	19	7	1.7

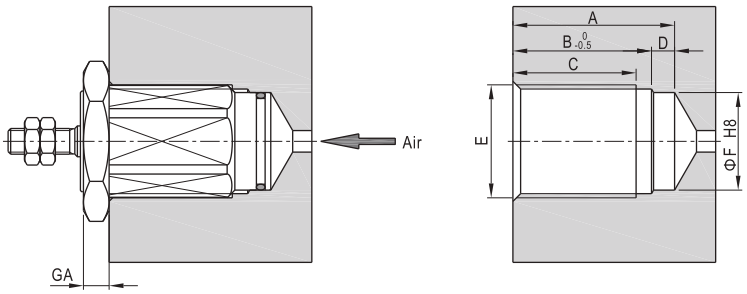

Bore size\Item	A			B			C			D	E	F	GA
Stroke	5St	10St	15St	5St	10St	15St	5St	10St	15St				
6	14.5	21.5	28.5	11	18	25	9	16	23	3.5	M10 × 1.0	8.5	4
8	15	22	29	11.5	18.5	25.5	9.5	16.5	23.5	3.5	M12 × 1.0	10	4
10	15.5	22.5	29.5	12	19	26	10	17	24	3.5	M16 × 1.5	12	4
12	17	23	29	13.5	19.5	25.5	11.5	17.5	23.5	3.5	M18 × 1.5	15	5
16	18	24	30	14	20	26	11.5	17.5	23.5	4	M22 × 1.5	19	5

Note: Size E and F must be concentric.

Product series

Series name	Acting type	Bore size	Collocation of sensor switch CS1–G DS1–G
TR Series	Double acting	6 10 16 20 25 32	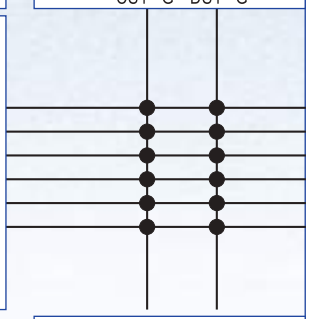
Page 242			381

Installation and application

1. When load changes in the work, the cylinder with abundant output capacity shall be selected.
2. Relative cylinder with high temperature resistance or corrosion resistance shall be chosen under the condition of high temperature or corrosion;
3. Necessary protection measure shall be taken in the environment with higher humidity, much dust or water drops, oil dust and welding dregs.
4. Dirty substances in the pipe must be eliminated before cylinder is connected with pipeline to prevent the entrance of particles into the cylinder;
5. The medium used by cylinder shall be filtered to 40 μ m or below.
6. As both the front cover and piston are short, too large stroke can not be selected.
7. Anti-freezing measure shall be adopted under low temperature environment to prevent moisture freezing.
8. The cylinder shall avoid redial load in operation to maintain the normal and extend service life.
9. If the cylinder is dismantled and stored for a long time, please conduct anti-rust treatment to the surface. Anti-dust cap shall be inserted into the inlet and outlet ports. As the precision of the manufacture and guide is high, Please do not dismantle the fixed block or cylinder cover .

Criteria for selection: Cylinder thrust

Unit：Newton(N)

Bore size (mm)	Rod size (mm)	Acting type		Pressure area (mm^2)	Operating pressure(MPa)						
					0.1	0.2	0.3	0.4	0.5	0.6	0.7
6	4	Double acting	Push side	56.5	5.7	113.	17.0	22.6	28.3	33.9	39.6
			Pull side	31.4	3.1	6.3	9.4	12.6	15.7	18.8	22.0
10	6	Double acting	Push side	157.1	15.7	31.4	47.1	62.8	78.6	94.3	110.0
			Pull side	100.5	10.1	20.1	30.2	40.2	50.3	60.3	70.4
16	8	Double acting	Push side	402.1	40.2	80.4	120.6	160.8	201.1	241.3	281.5
			Pull side	301.6	30.2	60.3	90.5	120.6	150.8	181.0	211.1
20	10	Double acting	Push side	628.3	62.8	125.7	188.5	251.3	314.2	377.0	439.8
			Pull side	471.2	47.1	94.2	141.4	188.5	235.6	282.7	329.8
25	12	Double acting	Push side	981.7	98.2	196.4	294.5	392.7	490.9	589.0	687.2
			Pull side	755.6	75.6	151.1	226.7	302.2	377.8	453.4	528.9
32	16	Double acting	Push side	1608.5	160.9	321.7	482.6	643.4	804.3	965.1	1126.0
			Pull side	1206.4	120.6	241.3	361.9	482.6	603.2	723.8	844.5

Specification

Bore size(mm)	6	10	16	20	25	32
Acting type	Double acting					
Fluid	Air(to be filtered by 40 μ m filter element)					
Operating pressure	0.1~1.0MPa(14~145psi)					
Proof pressure	1.5MPa(215psi)					
Temperature ℃	-20~70					
Speed range mm/s	30~500					
Adjustable stroke mm	−5~0					
Stroke tolerance	$0\sim100\ ^{+1.0}_{0}$ $>100\ ^{+1.5}_{0}$					
Cushion type	Bumper					
Non−rotating tolerance ①	± 0.2°	± 0.15°				± 0.1°
Port size ②	M5 × 0.8					1/8"

① Retract position.
② G thread and NPT thread are available. Add) Refer to P381~402 for detail of sensor switch.

Symbol

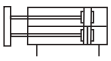

Product feature

1. JIS standard is implemented.
2. The non-rotating precision is high and deflection of the end of piston rod is low, which is suitable for precise guide.
3. It adopts lengthening type sliding supporting guide. No additional lubricant is needed and it has good performance of guide.
4. Mounting holes on three sides facilitates multi-position mounting.
5. It is good resistance to bending and twisting moments.
6. Except for the axial, each side of the cylinder has installation orifices to provide several installation and fixation ways for the customers.
7. There are two groups of air intake and outlet at two sides of the cylinder for the actual selection.
8. Bumper in front of the barrel can adjust the stroke of cylinder and relieve impact.
9. Standard configuration of this series has magnet and the type without magnet is not available.

TR

How to mount

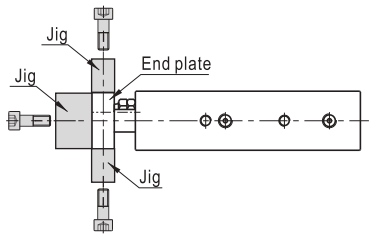

Stroke

Bore size (mm)	Standard stroke (mm)	Max. stroke
6	10 20 25 30 40 50	50
10	10 20 25 30 40 50 60 70 75 80 90 100	100
16	10 20 25 30 40 50 60 70 75 80 90 100 125 150 175 200	200
20	10 20 25 30 40 50 60 70 75 80 90 100 125 150 175 200	200
25	10 20 25 30 40 50 60 70 75 80 90 100 125 150 175 200	200
32	10 20 25 30 40 50 60 70 75 80 90 100 125 150 175 200	200

Note) 1. Please contact the company for other special strokes.
2. The dimensions of non-std stroke cylinder has the same dimensions as the next longer stroke std. stroke cylinder. e.g. 23mm stroke cylinder has the same dimensions of 25 std. stroke cylinder.

Ordering code

TR 20 × 50 S G

- **Model**: TR: Twin-rod cylinder(Double acting type)
- **Bore size**: 6 10 16 20 25 32
- **Stroke**: Refer to stroke table for details
- **Magnet** ①: S: With magnet
- **Thread type** ②: G: G; T: NPT

① TR Series are all with magnet.
② When the thread is standard, the code is blank.

Inner structure and material of major parts

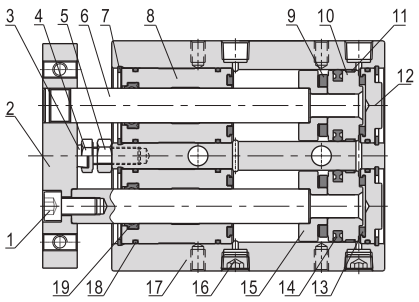

NO.	Item		Material	NO.	Item		Material
1	Screw		Carbon steel	10	Piston	Φ6,10	SUS304
2	Fixing plate		Aluminum alloy			Other	Aluminum alloy
3	Bumper		POM	11	Wear ring		Nylon 6
4	Screw		Free cutting steel	12	Back cover		Aluminum alloy
5	Nut		Carbon steel	13	Bumper		TPU
6	Piston rod	Φ25,32	Carbon steel	14	Piston seal		NBR
		Other	SUS304	15	Magnet holder	Φ6,10	SUS304
7	C clip		Spring steel			Other	Aluminum alloy
8	Front cover		Aluminum alloy	16	Screw		Carbon steel
9	Magnet	Φ32	Plastic	17	Body		Aluminum alloy
		Other	Sintered metal(Neodymium-iron-boron)	18	Back cover O−ring		NBR
				19	Wiper seal		NBR

Max. weight of allowable side-load

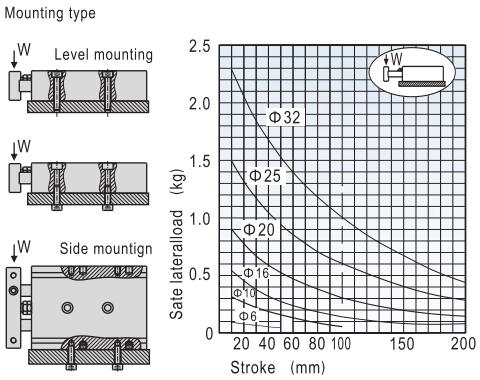

Safe deflection

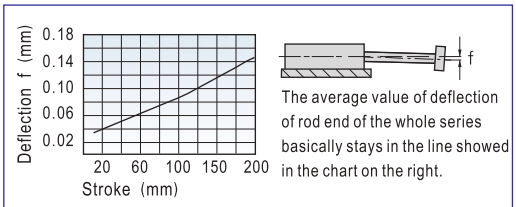

The average value of deflection of rod end of the whole series basically stays in the line showed in the chart on the right.

Dimensions

Φ6~Φ16

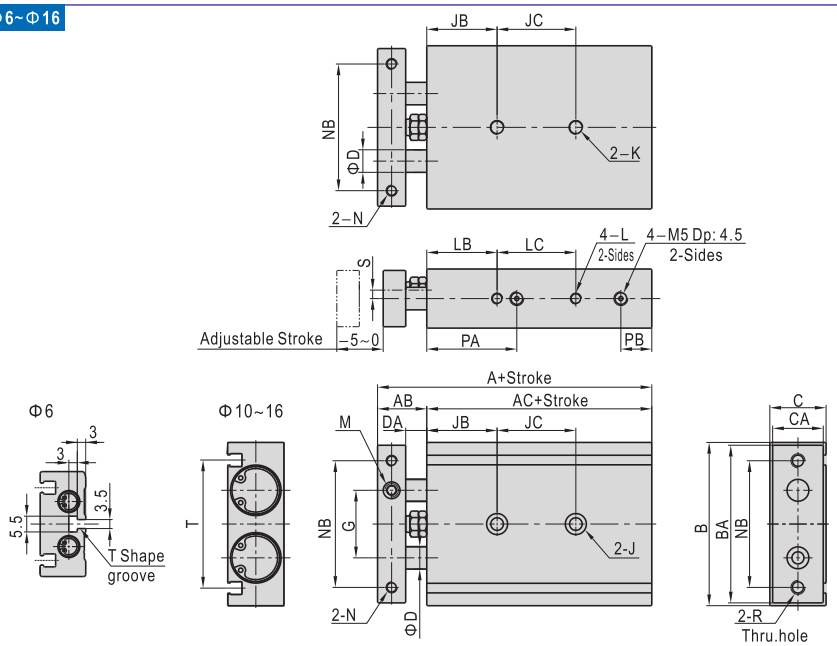

Bore size\Item / Stroke	A	AB	AC	B	BA	C	CA	D	DA	G	JC LC 10~25	30~50	60~80	90~100	125	150	175	200	PA	PB	S	T
6	58.5	13.5	45	37	35	16	14	4	8	16	JC=10+Stroke/2 LC=13+Stroke		-	-	-	-	-	-	24.5	6.5	4.5	26
10	72	17	55	46	44	17	15	6	9	20	30	40	50	60	-	-	-	-	30	8	3.5	36.5
16	79	19	60	58	56	20	18	8	9	25	25	35	45	55	65	75	145	145	38	8	5	46.5

Bore size\Item	J	JB	K	L	LB	M	N	NB	R
6	One-side: Φ6.5 Dp: 3.5 Thru.hole : Φ3.5	13	-	M3×0.5 Dp: 4.5	10	M3×0.5	M3×0.5 Thru.hole	28	M3×0.5
10	One-side: Φ6.5 Dp: 3.5 Thru.hole : Φ3.5	20	M4×0.7 Dp: 7	M3×0.5 Dp: 5	20	M5×0.8	M3×0.5 Thru.hole	35	M4×0.7
16	One-side: Φ8.0 Dp: 4.5 Thru.hole : Φ4.5	30	M5×0.8 Dp: 8	M4×0.7 Dp: 5	30	M6×1.0	M4×0.7 Thru.hole	45	M5×0.8

Φ20~Φ32

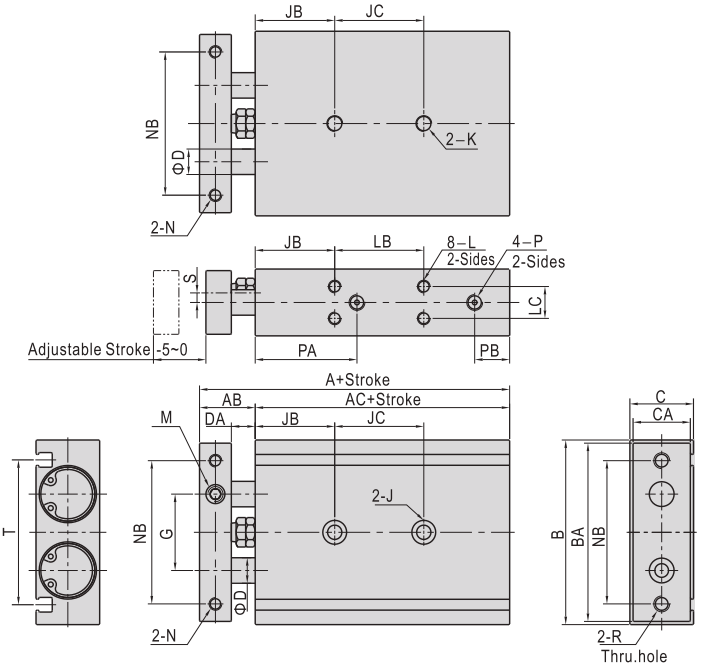

Bore size\Item / Stroke	A	AB	AC	B	BA	C	CA	D	DA	G	JB	JC LB 10~25	30~50	60~100	125	150	175	200	P	PA	PB	S
20	94	24	70	64	62	25	23	10	12	28	30	30	40	60	80	80	100	100	M5×0.8	46	9	6.5
25	96	24	72	80	78	30	28	12	12	35	30	30	40	60	80	80	100	100	1/8"	43	9	9
32	112	30	82	98	96	38	36	16	14	44	30	40	50	70	90	90	110	110	1/8"	53	10	11.5

Bore size\Item	J	K	L	LC	M	N	NB	R	T
20	One-side: Φ9.5 Dp: 5.5 Thru.hole : Φ5.5	M6×1.0 Dp: 10	M4×0.7 Dp: 7	9.5	M8×1.25	M4×0.7 Dp: 6	50	M5×0.8	52
25	One-side: Φ11 Dp: 6.5 Thru.hole : Φ7	M8×1.25 Dp:12	M5×0.8 Dp: 7	13	M8×1.25	M5×0.8 Dp: 7.5	60	M6×1.0	61
32	One-side: Φ11 Dp: 6.5 Thru.hole : Φ7	M8×1.25 Dp:12	M5×0.8 Dp: 7	20	M10×1.5	M5×0.8 Dp: 8	75	M6×1.0	73

Product series

Series name	Acting type	Bore size	Collocation of sensor switch DS1–H DS1–HL	Collocation of sensor switch CS1–G DS1–G
TCM6、TCM10	Double acting	6 10	●	
TCM(TCL)12~TCM(TCL)63	Double acting	12 16 20 25 32 40 50 63	●	●
TCM(TCL)80、TCM(TCL)100	Double acting	80 100	●	●
Page	246		381	

Installation and application

1. When load changes in the work, the cylinder with abundant output capacity shall be selected.
2. Relative cylinder with high temperature resistance or corrosion resistance shall be chosen under the condition of high temperature or corrosion.
3. Necessary protection measure shall be taken in the environment with higher humidity, much dust or water drops, oil dust and welding dregs.
4. Dirty substances in the pipe must be cleared away before cylinder is connected with pipeline to prevent the entrance of particles into the cylinder.
5. The medium used by cylinder shall be filtered to 40 μ m or below.
6. The cylinder shall avoid the influence of side load in operation to maintain the normal work of cylinder and extend the service life.
7. Anti-freezing measure shall be adopted under low temperature environment to prevent moisture freezing.
8. If the cylinder is dismantled and stored for a long time, please conduct anti-rust treatment to the surface. Anti-dust cap shall be inserted into the inlet and outlet ports. As the precision of the manufacture and guide is high, never dismantle the fixed block or cylinder cover without permission.

Specification

Bore size(mm)		6	10	12	16	20	25	32	40	50	63	80	100
Acting type		Double acting											
Fluid		Air(to be filtered by 40 μ m filter element)											
Operating pressure		0.15~0.7MPa(23~100psi)		0.1~1.0MPa(14~145psi)									
Proof pressure		1.05MPa(152psi)		1.5MPa(215psi)									
Temperature ℃		-20~70											
Speed range mm/s		50~500		30~500								50~400	
Stroke tolerance		0~100 $^{+1.0}_{0}$ >100 $^{+1.5}_{0}$											
Cushion type		Bumper											
Non-rotating tolerance ①	Linear bearing	-		± 0.08°		± 0.07°		± 0.06°		± 0.05°		± 0.04°	
	Bronze bearing	± 1.0°		± 0.10°		± 0.09°		± 0.08°		± 0.06°		± 0.05°	
Port size ②		M3 × 0.5		M5 × 0.8		1/8"				1/4"		3/8"	

① Retract position.

② G thread and NPT thread are available. Add) Refer to P381~402 for detail of sensor switch.

Stroke

Bore size (mm)	Standard stroke (mm)	Max. stroke
6	5 10 15 20	20
10	5 10 15 20 25 30	30
12	10 20 25 30 40 50 60 70 75 80 90 100 125 150	150
16	10 20 25 30 40 50 60 70 75 80 90 100 125 150 175 200	200
20, 25	20 25 30 40 50 60 70 75 80 90 100 125 150 175 200 225 250	250
32, 40, 50, 63, 80, 100	25 30 40 50 60 70 75 80 90 100 125 150 175 200 225 250	250

Note) If non-standard stroke is ordered, backing plate will be added in the cylinder of standard stroke if the gap of the standard stroke and non-standard stroke is 1mm (Φ12~Φ32) or 5mm (Φ40~Φ63). For example, the non-standard stroke cylinder with a stroke of 28mm is transformed from the standard cylinder whose standard stroke is 30mm through adding a pad and their shape and dimension are the same.

Symbol

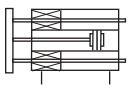

Product feature

1. JIS standard is implemented.
2. Two guides of special bearing steel and linear bearing or bronze bearing guide are used to prevent rotating. They can bear high torque and radial load.
   ★Note: Steel ball linear bearing: It is suitable for elevation action of cylinder or the situation requiring high precision and high bearing ability, especially for the situation requiring low fraction action process.
   Bronze sliding bearing: it is suitable for the action that has radial load resistance. Compared with normal cylinder of same use, the horizontal impact resistance is doubled and it has stronger torsion rigidity.
3. Drive unit and guide unit are in the same barrel that no additional accessories are needed with minimal space required. The air intake is optional and it is convenient to install.
4. The bottom, back side and fixing plate of main body respectively has two exact orientation orifices (See ΦPA orifice and the orifice in XX point), which can provide orientation installation with high precision for the special situation.
5. Options of switch mounting with provision 4 mounting slots.
6. Special design of main body provides multi-mount;

TC

Ordering code

TC M 50 × 50 S G

- **Model**: TC: Tri-rod cylinder(Double acting type)
- **Bearing type**

Bearing type	Adapt bore size
L: Linear bearing	12~100
M: Bronze bearing	6~100

- **Bore size**: 6 10 12 16 20 25 32 40 50 63 80 100
- **Stroke**: Refer to stroke table for details
- **Thread type** ①

G: G
T: NPT

- **Magnet**: S: With magnet

① When the thread is standard, the code is blank. Add) TC Series are all with magnet.

How to mount

Fixation of screw on top surface(Φ6~Φ100)

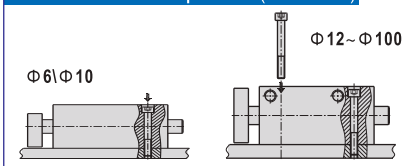

Fixation of screw at bottom surface(Φ12~Φ100)

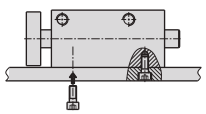

Fixation of T slot at bottom(Φ12~Φ100)

Fixation of screw at back side(Φ6~Φ100)

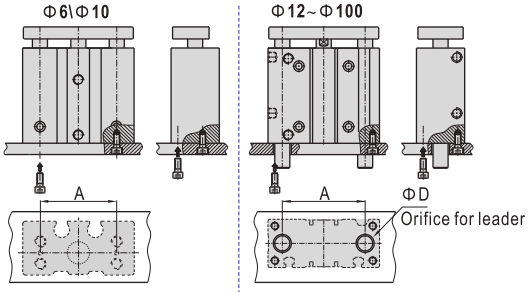

Bore size\Item	A	D(Min) TCM	D(Min) TCL
6	20.5	X	-
10	23	X	-
12	41	8	
16	46	10	
20	54	12	
25	64	14	
32	78	18	
40	86	18	
50	110	22	
63	124	22	
80	156	30	25
100	188	32	30

Safe load and torque

Bore size	Type	Stroke(mm) 5	10	15	20	25	30	40	50	60	70	75	80	90	100	125	150	175	200	225	250
Max. safe load																					Unit: Newton(N)
12	TCM	-	44	-	33	29	26	41	36	30	28	26	25	24	22	19	17	-	-	-	-
	TCL	-	37	-	27	25	22	35	30	27	24	23	21	19	18	15	12	-	-	-	-
16	TCM	-	67	-	51	42	37	63	58	49	41	37	35	33	32	27	24	22	20	-	-
	TCL	-	54	-	40	37	32	54	47	42	38	35	32	30	28	23	20	17	15	-	-
20	TCM	-	-	-	78	61	57	123	112	99	91	67	84	79	75	66	59	54	49	45	42
	TCL	-	-	-	58	52	48	101	90	83	74	70	69	63	58	62	54	48	43	39	35
25	TCM	-	-	-	93	89	76	142	131	119	107	101	97	90	85	68	79	71	65	61	55
	TCL	-	-	-	82	79	68	132	118	109	99	93	88	81	77	80	70	62	55	50	45
32	TCM	-	-	-	-	203	190	179	164	221	197	182	172	163	157	142	127	116	106	98	91
	TCL	-	-	-	-	191	182	166	157	207	178	164	156	150	144	203	186	171	158	146	137
40	TCM	-	-	-	-	203	190	179	164	221	197	182	172	163	159	142	127	116	106	97	91
	TCL	-	-	-	-	190	182	166	157	210	179	163	156	150	144	203	185	171	158	146	137
50	TCM	-	-	-	-	296	283	268	245	303	288	273	266	253	241	216	195	179	164	155	142
	TCL	-	-	-	-	208	196	185	173	259	232	223	212	207	199	264	242	224	207	195	181
63	TCM	-	-	-	-	296	283	268	245	303	288	273	266	253	241	216	195	179	164	153	142
	TCL	-	-	-	-	206	196	180	171	259	232	221	212	205	196	262	240	221	205	191	178
Max. safe torque																					Unit: Newton・Meter(N・m)
		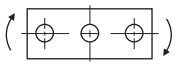																			
12	TCM	-	0.90	-	0.79	0.71	0.65	0.77	0.72	0.65	0.53	0.50	0.47	0.41	0.36	0.31	0.27	-	-	-	-
	TCL	-	0.61	-	0.45	0.40	0.35	0.58	0.50	0.44	0.39	0.37	0.35	0.32	0.29	0.24	0.20	-	-	-	-
16	TCM	-	1.21	-	1.04	0.94	0.88	1.23	1.11	0.99	0.72	0.69	0.65	0.61	0.58	0.50	0.44	0.40	0.36	-	-
	TCL	-	0.99	-	0.74	0.66	0.59	0.99	0.86	0.77	0.69	0.65	0.61	0.57	0.52	0.43	0.37	0.32	0.28	-	-
20	TCM	-	-	-	1.57	1.42	1.31	2.39	2.15	1.97	1.90	1.88	1.86	1.72	1.63	1.44	1.28	1.16	1.06	1.01	0.90
	TCL	-	-	-	1.26	1.14	1.03	2.17	1.94	1.79	1.59	1.52	1.46	1.33	1.25	1.34	1.17	1.03	0.93	0.88	0.76
25	TCM	-	-	-	2.40	2.22	2.01	3.66	3.35	3.17	3.06	2.96	2.91	2.77	2.57	2.26	2.02	1.83	1.67	1.57	1.42
	TCL	-	-	-	2.11	1.96	1.75	3.37	3.02	2.71	2.42	2.38	2.33	2.19	1.97	2.05	1.78	1.58	1.41	1.22	1.16
32	TCM	-	-	-	-	6.35	6.00	5.73	5.13	5.98	5.74	5.69	5.62	5.11	4.97	4.42	3.98	3.61	3.31	2.97	2.84
	TCL	-	-	-	-	5.95	5.73	5.44	4.89	5.43	5.15	5.11	5.02	4.70	4.51	6.34	5.79	5.33	4.93	4.33	4.29
40	TCM	-	-	-	-	7.00	6.60	6.11	5.66	6.66	6.31	6.27	6.23	5.86	5.48	4.78	4.38	3.98	3.65	3.34	3.13
	TCL	-	-	-	-	6.55	6.21	5.77	5.39	6.17	5.67	5.62	5.58	5.33	4.96	6.98	6.38	5.87	5.43	5.00	4.72
50	TCM	-	-	-	-	13.00	12.60	11.00	10.80	13.70	12.70	12.00	11.80	11.10	10.80	9.50	8.60	7.86	7.24	6.80	6.24
	TCL	-	-	-	-	9.17	8.75	8.30	7.62	10.30	9.94	9.83	9.77	8.82	8.74	11.60	10.70	9.83	9.12	8.95	7.95
63	TCM	-	-	-	-	14.70	13.60	12.90	12.10	19.40	16.20	13.50	12.70	12.10	11.90	10.70	9.69	8.86	8.16	7.52	7.04
	TCL	-	-	-	-	10.20	9.74	9.20	8.48	17.50	14.00	11.00	10.60	10.20	9.74	13.00	11.90	11.00	10.20	9.63	8.84
80	TCM	-	-	-	-	21.9	20.8	19.7	18.6	15.8	24	22.9	21.7	21	20.5	18.6	17	15.6	14.5	13.5	12.6
	TCL	-	-	-	-	15.1	14.3	13.6	12.9	12.2	23.8	22.7	21.6	21	20.6	18.9	17.3	16	14.8	13.5	12.9
100	TCM	-	-	-	-	38.8	36.8	35	33.5	28.5	39.4	37.5	35.6	34.5	33.8	30.9	28.4	26.2	24.4	22.5	21.4
	TCL	-	-	-	-	27.1	25.7	24.4	30.6	26	39.8	37.9	36	35.2	34.6	31.8	29.3	27.2	25.3	23.5	22.1

Inner structure

Φ6

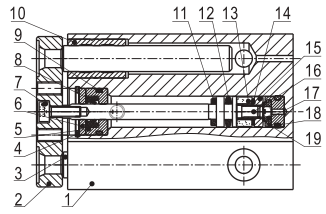

NO.	Item	NO.	Item
1	Body	11	Bumper
2	Fixing plate	12	Piston seal
3	Leader	13	Magnet
4	C clip	14	Magnet washer
5	Front cover	15	Piston
6	O-ring stop block	16	Piston rod
7	Screw	17	Bumper
8	Piston rod O-ring	18	O-ring
9	O-ring	19	Washer
10	Bearing		stop block

Φ10

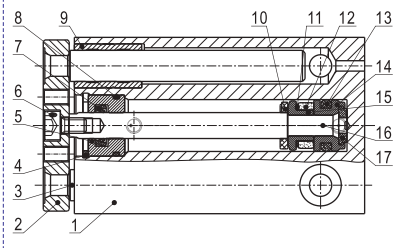

NO.	Item	NO.	Item
1	Body	10	Bumper
2	Fixing plate	11	Magnet washer
3	Leader	12	Magnet
4	C clip	13	Piston seal
5	Front cover	14	Piston
6	Screw	15	Magnet holder
7	Piston rod O-ring	16	Piston rod
8	O-ring	17	Bumper
9	Bearing		

Φ12~Φ63

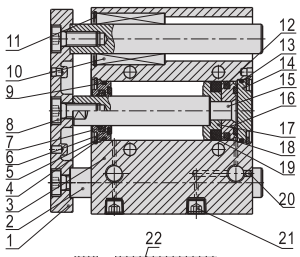

Stroke≥50mm

TCL

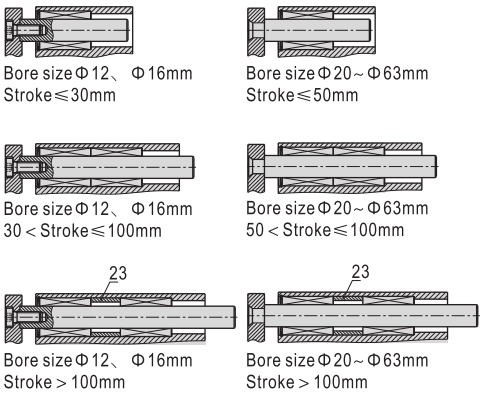

Bore size Φ12、Φ16mm
Stroke≤30mm

Bore size Φ20~Φ63mm
Stroke≤50mm

Bore size Φ12、Φ16mm
30 < Stroke≤100mm

Bore size Φ20~Φ63mm
50 < Stroke≤100mm

Bore size Φ12、Φ16mm
Stroke > 100mm

Bore size Φ20~Φ63mm
Stroke > 100mm

TCM

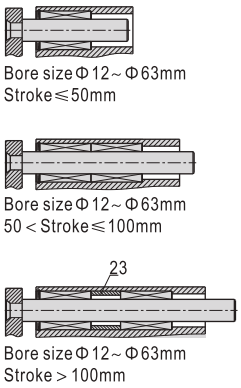

Bore size Φ12~Φ63mm
Stroke≤50mm

Bore size Φ12~Φ63mm
50 < Stroke≤100mm

Bore size Φ12~Φ63mm
Stroke > 100mm

NO.	Item	NO.	Item
1	Fixing plate	13	O-ring
2	Leader	14	Back cover
3	Body	15	Piston rod
4	C clip	16	Piston
5	Front cover	17	Magnet holder
6	Bumper	18	Magnet washer
7	Piston rod O-ring	19	Magnet
8	Screw	20	Screw
9	O-ring	21	Screw
10	Bearing	22	Bearing
11	C clip	23	Spacer
12	Piston seal		

Φ80,Φ100

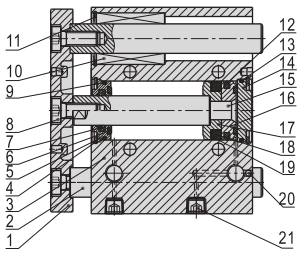

TCL

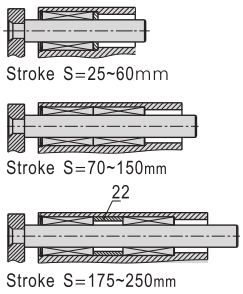

Stroke S=25~60mm

Stroke S=70~150mm

Stroke S=175~250mm

TCM

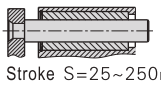

Stroke S=25~250mm

NO.	Item	NO.	Item
1	Fixing plate	12	Piston seal
2	Leader	13	O-ring
3	Body	14	Back cover
4	C clip	15	Piston rod
5	Front cover	16	Piston
6	Bumper	17	Magnet holder
7	Piston rod O-ring	18	Magnet washer
8	Screw	19	Magnet
9	O-ring	20	Screw
10	Bearing	21	Screw
11	C clip	22	Spacer

Dimensions

TCM6\TCM10

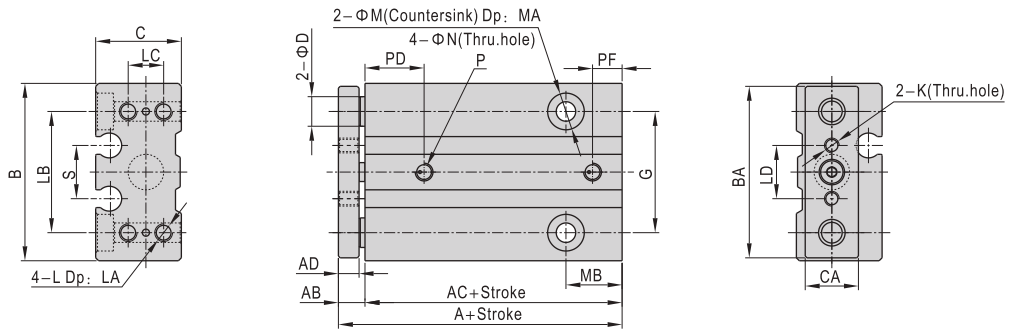

Bore size\Item	A	AB	AC	AD	B	BA	C	CA	D	G	K	L	LA	LB	LC	LD
6	29.5	6	23.5	5	30	29	14.5	9	5	20.5	M2.5X0.45	M3X0.5	5	20.5	6	9
10	32	6	26	5	34	33	18	10	6	23	M3X0.5	M4X0.7	5	23	8	11

Bore size\Item	M	MA	MB	N	P	PD	PF
6	6	3	9.5	3.3	M3X0.5	9.5	5.5
10	8	4	8.5	4.3	M3X0.5	11.5	5

Dimensions

TCL/TCM12~TCL/TCM63

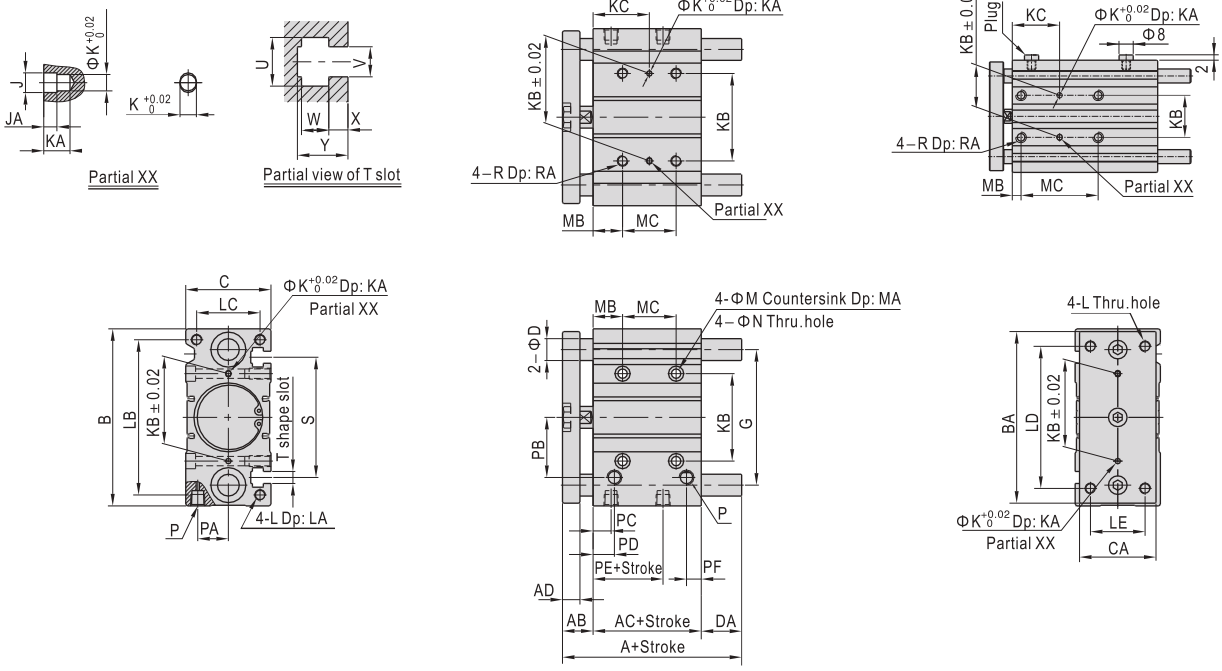

Item	A					DA								MC				KC			
Bore size	TCL	TCM	TCL\TCM			TCL				TCM											
Stroke	≤30	≤30	31~100	101~200	>200	≤30	31~100	101~200	>200	≤50	51~100	101~200	>200	≤30	31~100	101~200	>200	≤30	31~100	101~200	>200
12	42		55	85	–	0	13	43	–	0	13	43	–	20	40	110	–	15	25	60	–
16	46		65	95	–	0	19	49	–	0	19	49	–	24	44	110	–	17	27	60	–
20	53		80	104	122	0	27	51	69	0	27	51	69	24	44	120	200	29	39	77	117
25	53.5		82	104.5	122	0	28.5	51	68.5	0	28.5	51	68.5	24	44	120	200	29	39	77	117
Stroke	≤50	≤50	51~100	101~200	>200	≤50	51~100	101~200	>200	≤50	51~100	101~200	>200	≤40	41~100	101~200	>200	≤40	41~100	101~200	>200
32	65	78	102	118	140	5.5	42.5	58.5	80.5	18.5	42.5	58.5	80.5	24	48	124	200	33	45	83	121
40	66	78	102	118	140	0	36	52	74	12	36	52	74	24	48	124	200	34	46	84	122
50	76	89	118	134	161	4	46	62	89	17	46	62	89	24	48	124	200	36	48	86	124
63	77	89	118	134	161	0	41	57	84	12	41	57	84	28	52	128	200	38	50	88	124

Bore size\Item	AB	AC	AD	B	BA	C	CA	D(TCL)	D(TCM)	G	J	JA	K	KA	KB	L	LA	LB	LC	LD
12	13	29	8	58	56	26	22	6	8	41	3.5	3	3	6	23	M4×0.7	10	50	18	48
16	13	33	8	64	62	30	25	8	10	46	3.5	3	3	6	24	M5×0.8	12	56	22	54
20	16	37	10	83	81	36	30	10	12	54	3.5	3	3	6	28	M5×0.8	13	72	24	70
25	16	37.5	10	93	91	42	38	12	16	64	4.5	3	4	6	34	M6×1.0	15	82	30	78
32	22	37.5	12	112	110	48	44	16	20	78	4.5	3	4	6	42	M8×1.25	20	98	34	96
40	22	44	12	120	118	54	44	16	20	86	4.5	3	4	6	50	M8×1.25	20	106	40	104
50	28	44	16	148	146	64	60	20	20	110	6	4	5	8	66	M10×1.5	22	130	46	130
63	28	49	16	162	158	78	70	20	20	124	6	4	5	8	80	M10×1.5	22	142	58	130

Bore size\Item	LE	M	MA	MB	N	P	PA	PB	PC	PD	PE	PF	R	RA	S	U	V	W	X	Y
12	14	8	4.5	5	4.5	M5×0.8	8	18	11	11	13	7.5	M5×0.8	10	37	7.5	4.5	4	2	6.5
16	16	8	4.5	5	4.5	M5×0.8	10	19	11	11	15	8	M5×0.8	10	38	7.5	4.5	4	2.5	7
20	18	9.5	5.5	17	5.5	1/8"	10.5	25	10.5	10.5	12.5	9	M6×1.0	12	44	8.5	5.5	4.5	3	8
25	26	9.5	5.5	17	5.5	1/8"	13.5	28.5	11.5	11.5	12.5	9	M6×1.0	12	50	8.5	5.5	4.5	3	8.5
32	30	11	7.5	21	6.5	1/8"	15	34	12.5	12.5	7	9	M8×1.25	16	63	10.5	6.5	5.5	3.5	9.5
40	30	11	7.5	22	6.5	1/8"	18	38	14	14	13	10	M8×1.25	16	72	10.5	6.5	5.5	4	11
50	40	14	9	24	8.5	1/4"	21.5	47	12	14	9	11	M10×1.5	20	92	13.5	8.5	7.5	4.5	13.5
63	50	14	9	24	8.5	1/4"	28	55	16.5	16.5	14	13.5	M10×1.5	20	110	18	11	10	7	18.5

Dimensions

TCL/TCM80

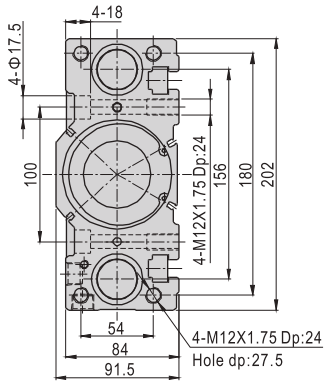

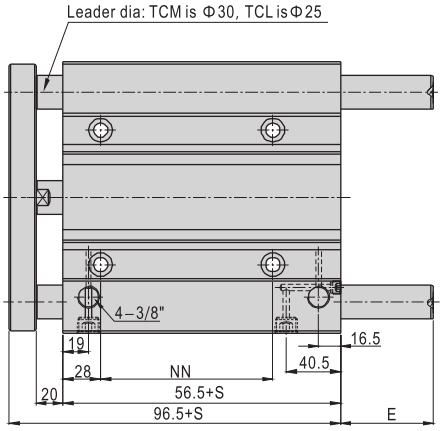

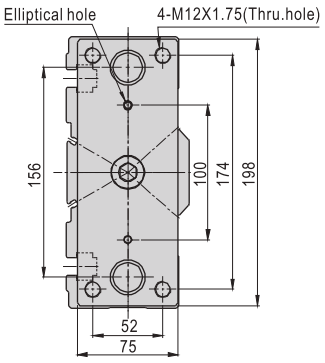

Item\Stroke	25	30	40	50	60	70	75	80	100	125	150	175	200	225	250
NN	28			52						128				200	
E	TCM=16/TCL=10					69						91			

TCL/TCM100

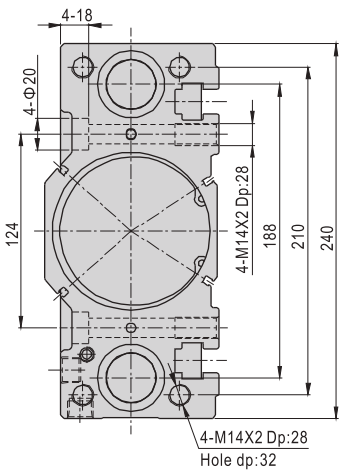

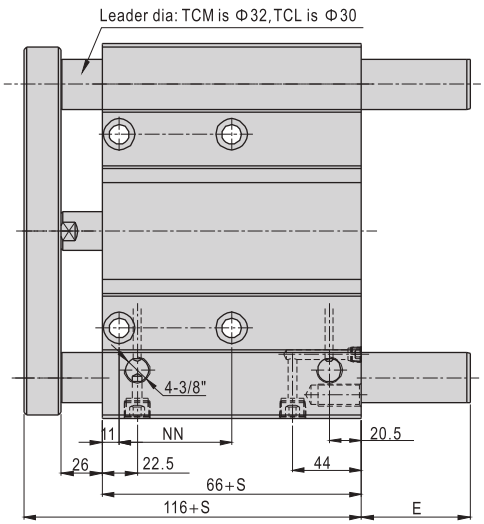

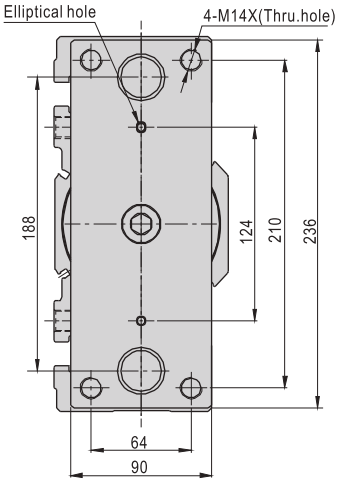

Item\Stroke	25	30	40	50	60	70	75	80	100	125	150	175	200	225	250
NN	48			72						148				220	
E	TCM=12/TCL=6					70						92			

Product series

Series name	Acting type	Bore size	Collocation of sensor switch CS1–G	Collocation of sensor switch DS1–G
STWA	Double acting	10	●	●
		16	●	●
		20	●	●
		25	●	●
		32	●	●
STWB				
Page	252		381	

Installation and application

1. When load changes in the work, the cylinder with abundant output capacity shall be selected.
2. Relative cylinder with high temperature resistance or corrosion resistance shall be chosen under the condition of high temperature or corrosion;
3. Necessary protection measure shall be taken in the environment with higher humidity, much dust or water drops, oil dust and welding dregs.
4. Dirty substances in the pipe must be eliminated before cylinder is connected with pipeline to prevent the entrance of contaminants into the cylinder.
5. The medium used by cylinder shall be filtered to 40 μ m or below.
6. The cylinder shall avoid the influence of side load in operation to maintain the normal work of cylinder and extend service life.
7. Anti–freezing measure shall be adopted under low temperature environment to prevent moisture freezing.
8. If the cylinder is dismantled and stored for a long time, please conduct anti–rust treatment to the surface. Anti– dust cap shall be inserted into the inlet and outlet ports. As the precision of the manufacture and guide is high, dismantle the fixed block or cylinder cover .

Criteria for selection: Cylinder thrust

Unit：Newton(N)

Bore size (mm)	Rod size (mm)	Acting type	Pressure area (mm^2)	Operating pressure(MPa) 0.1	0.2	0.3	0.4	0.5	0.6	0.7
10	6	Double acting	100.5	10.1	20.1	30.2	40.2	50.3	60.3	70.4
16	10	Double acting	245.0	24.5	49.0	73.5	98.0	122.5	147.0	171.5
20	12	Double acting	402.1	40.2	80.4	120.6	160.8	201.1	241.3	281.5
25	16	Double acting	579.6	58.0	115.9	173.9	231.8	289.8	347.8	405.7
32	20	Double acting	980.2	98.0	196.0	294.1	392.1	490.1	588.1	686.1

STW

Symbol

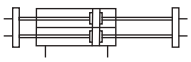

Product feature

1. Both body and fixing plates can be installed.
2. Three sets of air inlet and outlet are available for customer to choose and convenient for piping.
3. The structure of double-piston rod provides the good performance of anti-bending and anti-torsion and can bear relatively stronger movement radial and load.
4. Buffer device such as the integrated shock absorber can effectively slowdown impact velocity and extend life.

Specification

Bore size(mm)	10	16	20	25	32
Acting type	Double acting				
Fluid	Air(to be filtered by 40 μ m filter element)				
Operating pressure	0.1~1.0MPa(15~145psi)(1.0~10bar)				
Proof pressure	1.5MPa(215psi)(15bar)				
Temperature ℃	-20~70				
Speed range mm/s	30~500				
Stroke tolerance	$0\sim100^{+1.0}_{0}$ $>100^{+1.5}_{0}$				
Cushion type	Shock absorber				
Non-rotating tolerance ①	± 0.1°	± 0.05°		± 0.03°	
Port size ②	M5 × 0.8			1/8"	

① Retract position.
② G thread and NPT thread are available. Add) Refer to P381~402 for detail of sensor switch.

Stroke

Bore size (mm)	Standard stroke (mm)	Max. std stroke
10	25 50 75 100	100
16, 20, 25, 32	25 50 75 100 125 150 175 200	200

Note) Consult us for non-standard stroke.

Ordering code

STW B 25 × 50 S G

Model
STW: Slide table cylinder(Double acting type)

Mounting type
A: Fixing plate mounted

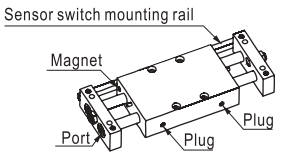

B: Body mounted

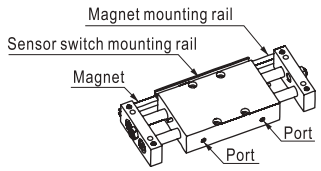

Thread type ①
G: G
T: NPT

Magnet
S: With magnet

Stroke
Refer to stroke table for details

Bore size
10 16 20 25 32

① When the thread is standard, the code is blank.

Inner structure and material of major parts

(STWA16-S, Stroke 25mm)

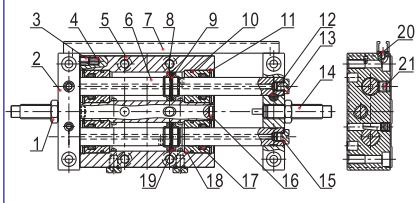

(STWA16-S, Stroke 50~200mm)

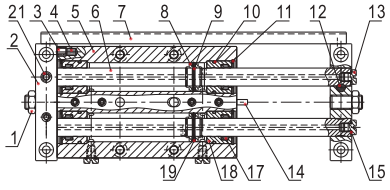

NO.	Item	Material
1	Hexagon nut	Carbon steel
2	Fixing plate	Aluminum alloy
3	Washer	NBR
4	Magnet	Sintered metal (Neodymium-iron-boron)
5	Body	Aluminum alloy
6	Piston rod	Carbon steel
7	Sensor switch mounting rail	Aluminum alloy
8	Piston	Aluminum alloy
9	O-ring	NBR
10	O-ring	NBR
11	C clip	Spring steel
12	Pin	Carbon steel
13	Plug screw	Carbon steel
14	Shock absorber	Combination
15	O-ring	NBR
16	Bumper	Carbon steel
17	O-ring	NBR
18	Front cover	Aluminum alloy
19	Piston seal	NBR
20	Screw	Carbon steel
21	Countersink screw	Carbon steel

Installation and application

1. There are 3 sets of air inlet and outlet ports on body and fixing plates, which are available for pipe connection from three directions.

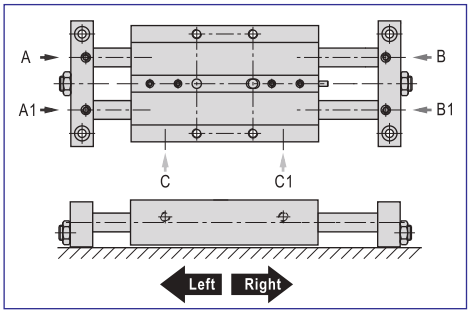

2. When air inlets and outlets are connected , the movement direction of cylinder is different. For example, when fixing plate is mounted on the machine, it's corresponding movement is indicated as the table below;

Pressure port	A	A1	B	B1	C	C1
Movement direction	Right	Left	Right	Left	Left	Right

3. Loading of piston rod——reference value for deflection

The fixing plates are fixed, the loading is acting on the center of body

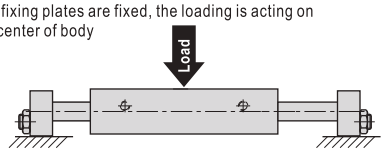

Allowable deflection value (mm)

Model	Load(N)\Stroke	100	200
STW10	9.81	0.07	–
STW16	39.2	0.05	0.20
STW20	49	0.04	0.15
STW25	58.8	0.02	0.08
STW32	98.1	0.02	0.07

The body is fixed, the loading is acting on the fixing plates

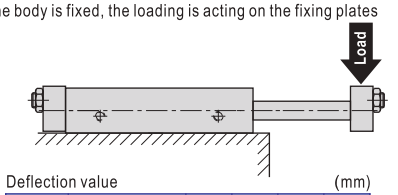

Deflection value (mm)

Model	Load(N)\Stroke	50	100	100	200
STW10	2.94	0.06	0.30	–	–
STW16	4.84	0.03	0.10	0.25	0.45
STW20	7.48	0.03	0.09	0.18	0.35
STW25	9.81	0.03	0.09	0.16	0.25
STW32	29.42	0.02	0.05	0.10	0.15

4. Reference value of allowable moment (M1, M2 and M3)

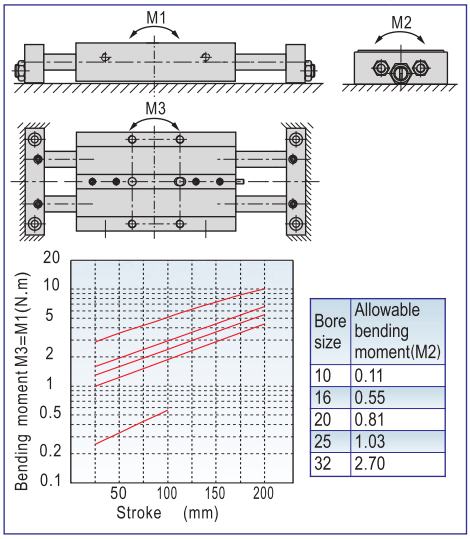

Bore size	Allowable bending moment(M2)
10	0.11
16	0.55
20	0.81
25	1.03
32	2.70

5. About shock absorber

5.1) Shock absorbers are consumable parts. When a decrease in energy absorption capacity is noticed, it must be replaced. Refer to the table below for shock absorber type.

5.2) Never loosen the bottom screw of the shock absorber. (It is not an adjustment screw.) That may cause oil leakage.

5.3) Refer to the table below for tightening torques of the shock absorber setting nut.

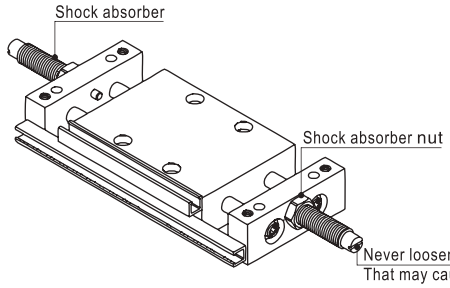

Cylinder	Shock absorber	Tightening torques(Nm)
STW10	ACA0806–1N	1.67
STW16	ACA0806–1N	1.67
STW20	ACA1007–1N	3.14
STW25	ACA1007–1N	3.14
STW32	ACA1412–1N	10.8

6. About sensor switch

6.1) STW series are all with magnet, the revelant sensor switchs are CS1–G、DS1–G. Please refer to page 381~402 for details.

6.2) The magnet locations of STWA & STWB are different, so sensor switch's position is different, please refer to below for details.

STWA

① Please refer below to secure sensor switch in sensor switch mounting rail.

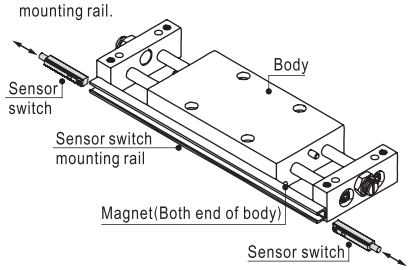

② Adjusting sensor switch position, tightening screw to secure sensor switch.

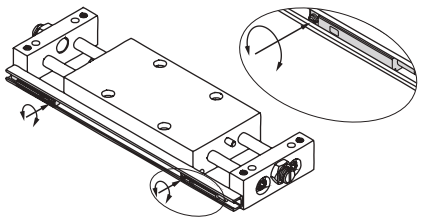

STWB

① Please refer below to secure sensor switch in sensor switch mounting rail.

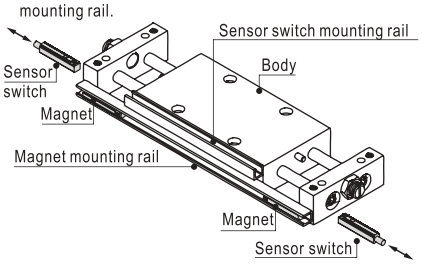

② Adjusting sensor switch position, tightening screw to secure sensor switch.

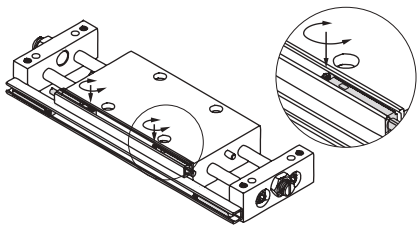

Mounting type

Body mounted(B)

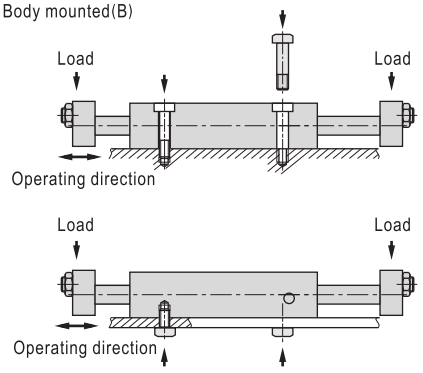

Fixing plate mounted(A)

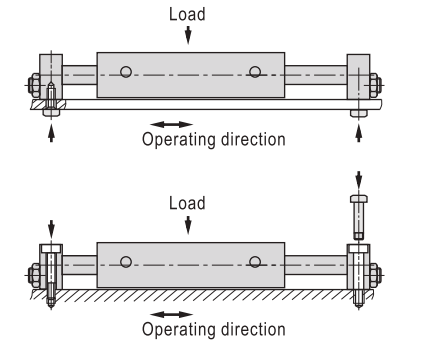

Dimensions

STW10 Stroke=25mm

A Type(Fixing plate mounted)

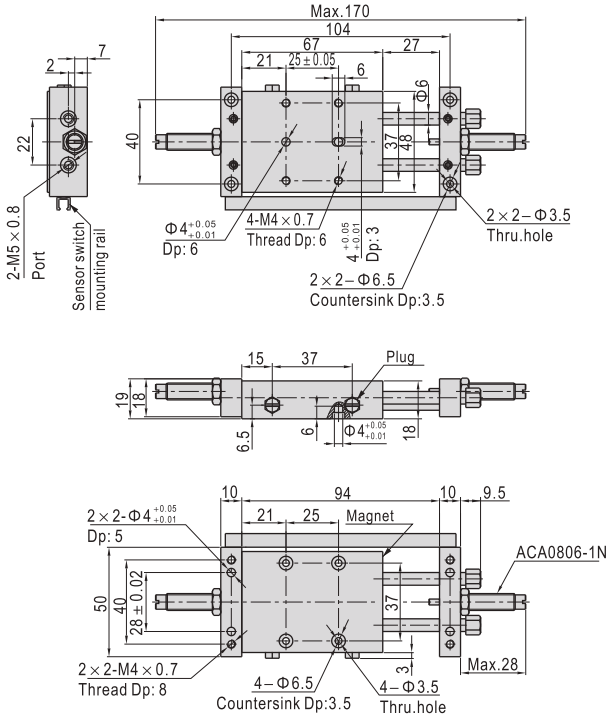

B Type(Body mounted)

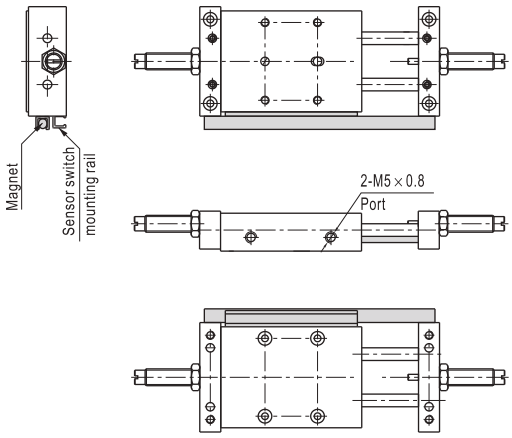

STW10 Stroke=50 75 100mm

A Type(Fixing plate mounted)

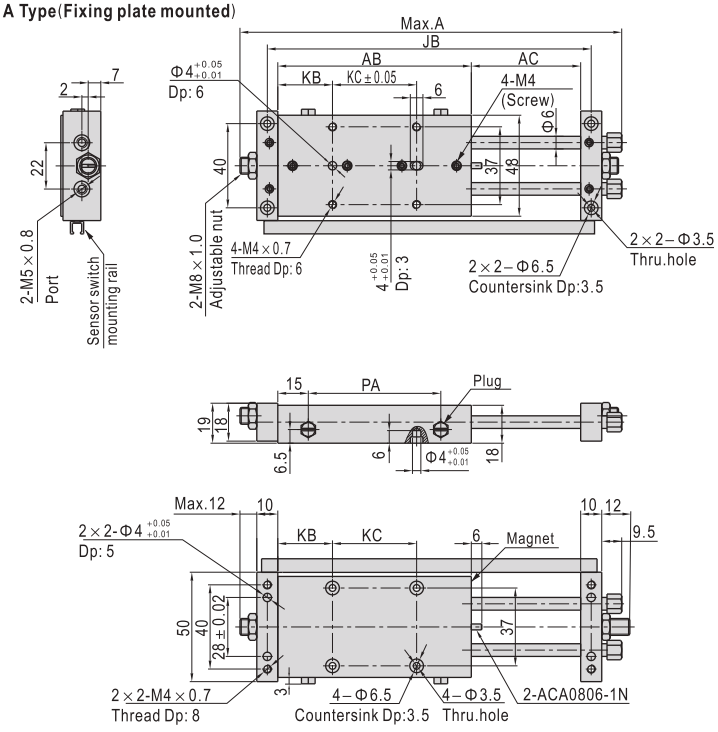

B Type(Body mounted)

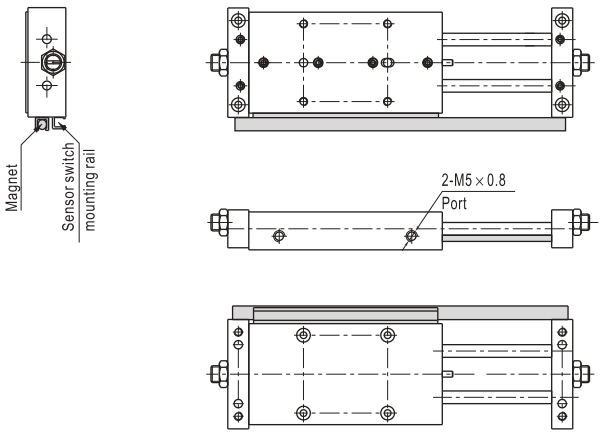

Stroke\Item	A	AB	AC	JB	KB	KC	PA
50	188	92	52	154	26	40	62
75	238	117	77	204	26	65	87
100	288	142	102	254	26	90	112

STW16 Stroke=25mm

A Type(Fixing plate mounted)

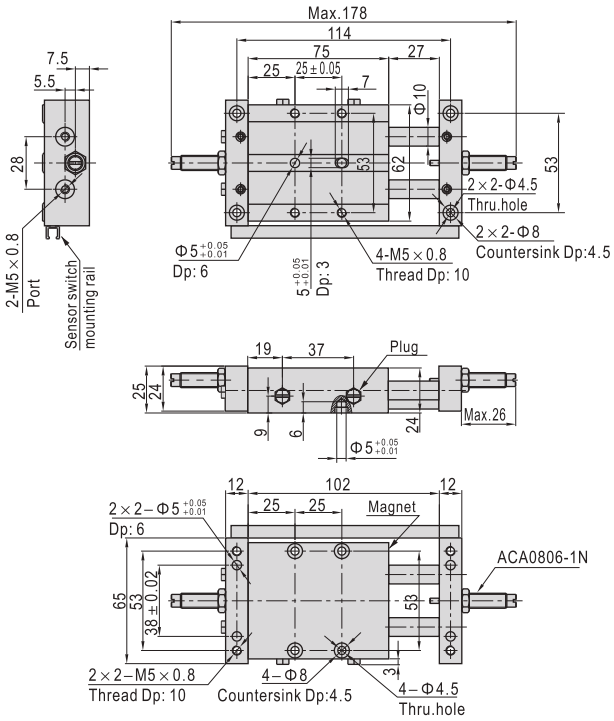

B Type(Body mounted)

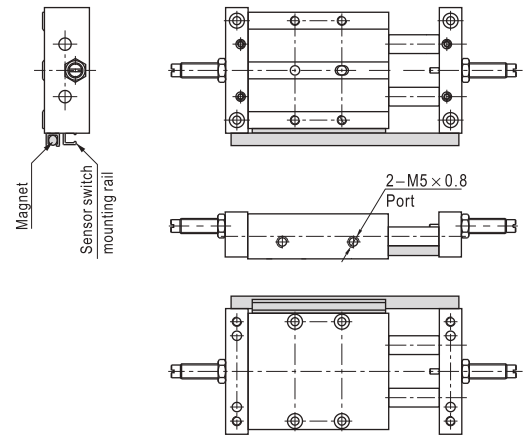

STW16 Stroke=50 75 100 125 150 175 200mm

A Type(Fixing plate mounted)

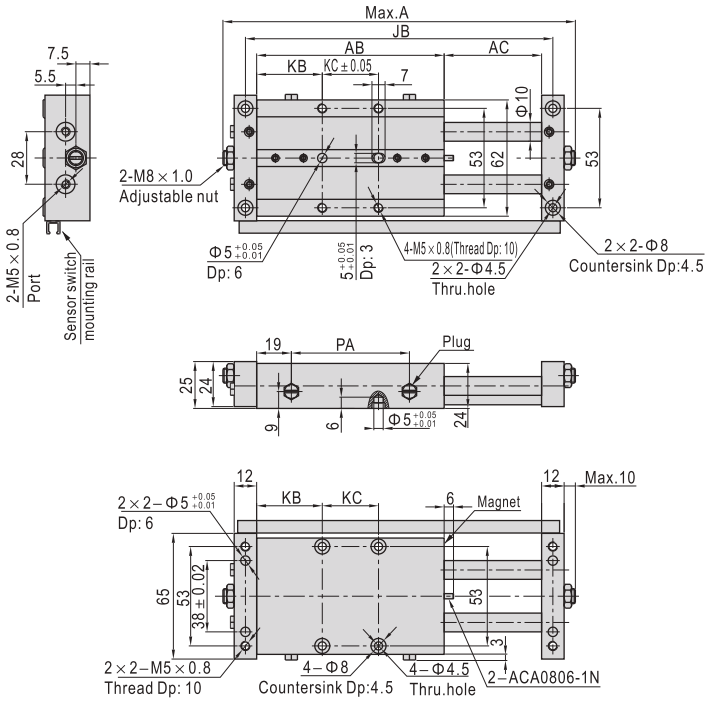

B Type(Body mounted)

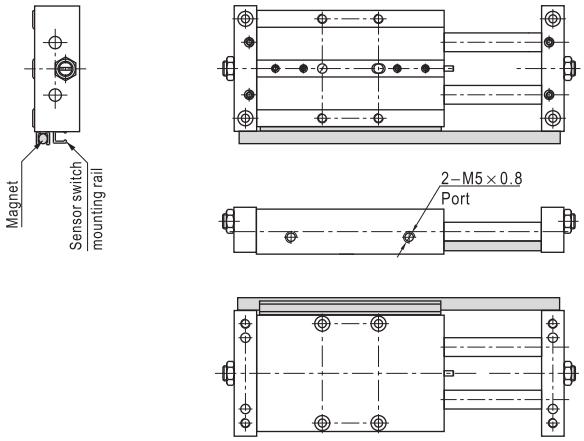

Stroke\Item	A	AB	AC	JB	KB	KC	PA
50	196	100	52	164	35	30	62
75	246	125	77	214	32.5	60	87
100	296	150	102	264	37.5	75	112
125	346	175	127	314	42.5	90	137
150	396	200	152	364	55	90	162
175	446	225	177	414	67.5	90	187
200	496	250	202	464	80	90	212

STW

STW20 Stroke=25mm

A Type(Fixing plate mounted)

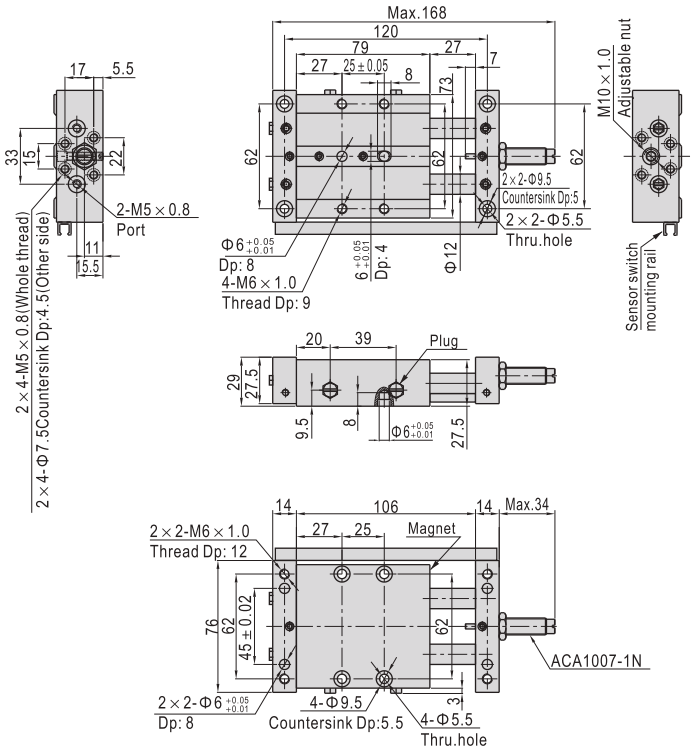

B Type(Body mounted)

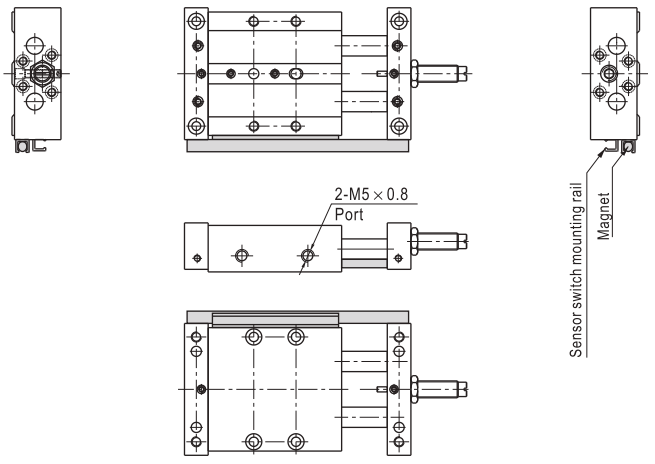

STW20 Stroke=50 75 100 125 150 175 200mm

A Type(Fixing plate mounted)

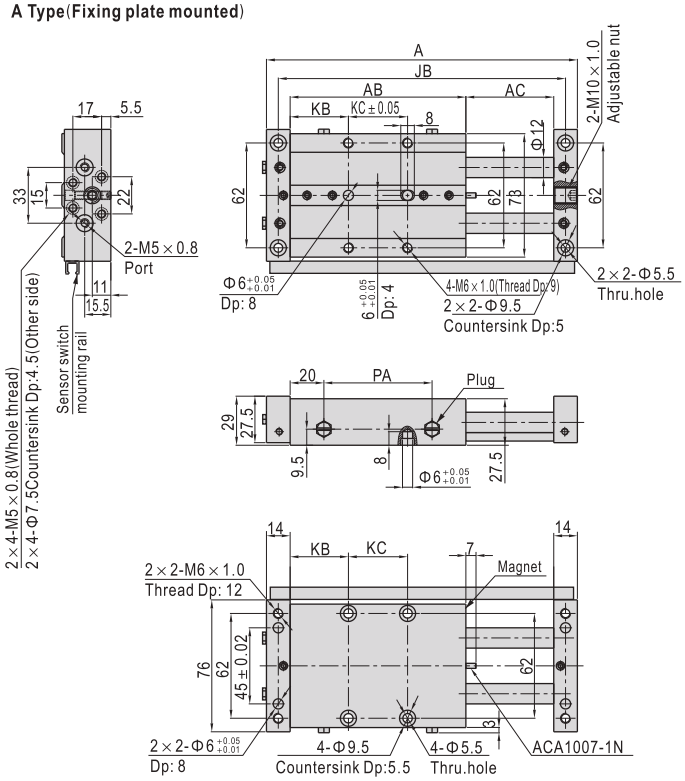

B Type(Body mounted)

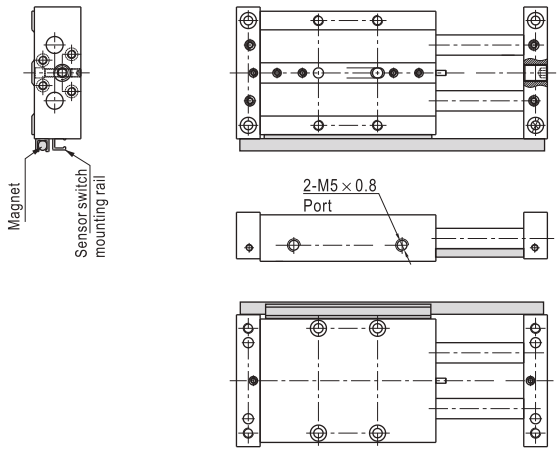

Stroke\Item	A	AB	AC	JB	KB	KC	PA
50	184	104	52	170	34.5	35	64
75	234	129	77	220	34.5	60	89
100	284	154	102	270	39.5	75	114
125	334	179	127	320	44.5	90	139
150	384	204	152	370	57	90	164
175	434	229	177	420	69.5	90	189
200	484	254	202	470	82	90	214

STW25 Stroke=25mm

A Type(Fixing plate mounted)

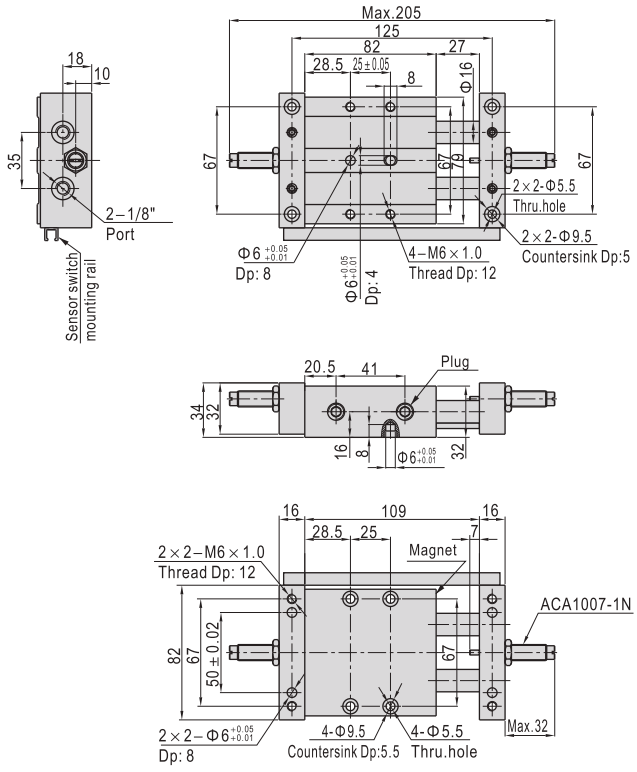

B Type(Body mounted)

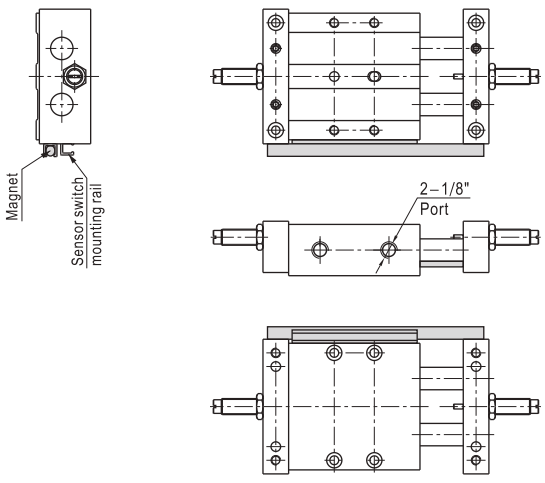

STW25 Stroke=50 75 100 125 150 175 200mm

A Type(Fixing plate mounted)

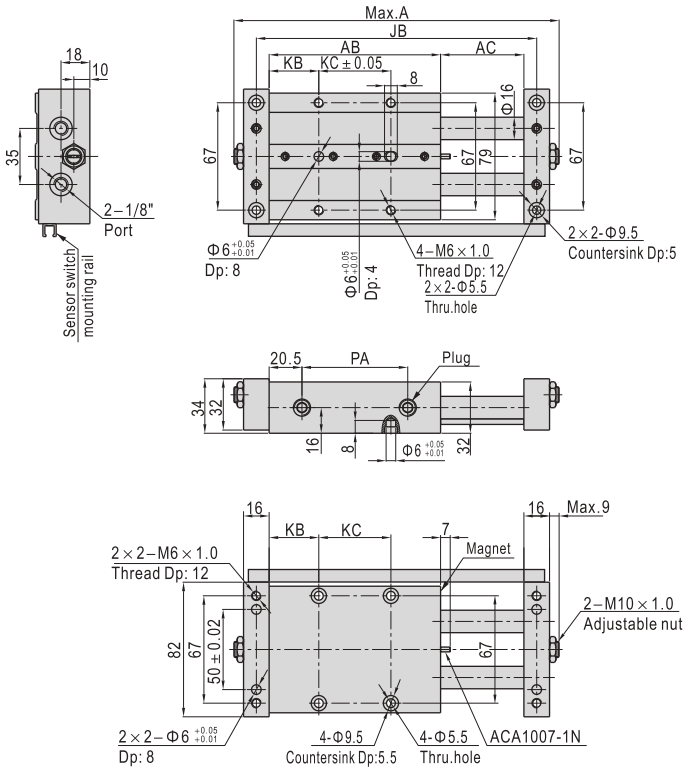

B Type(Body mounted)

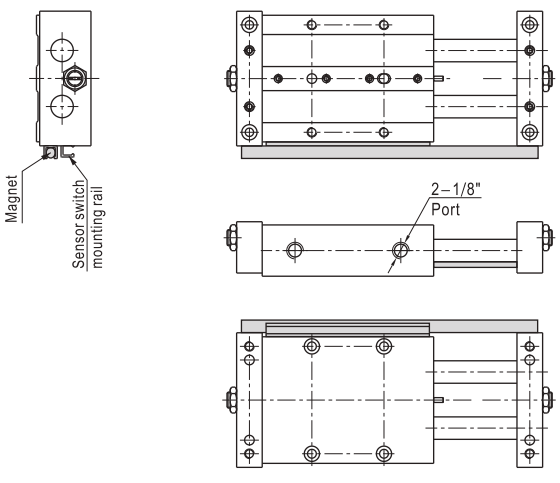

Stroke\Item	A	AB	AC	JB	KB	KC	PA
50	209	107	52	175	31	45	66
75	259	132	77	225	33.5	65	91
100	309	157	102	275	33.5	90	116
125	359	182	127	325	46	90	141
150	409	207	152	375	58.5	90	166
175	459	232	177	425	71	90	191
200	509	257	202	475	83.5	90	216

STW32 Stroke=25 50mm

A Type(Fixing plate mounted)

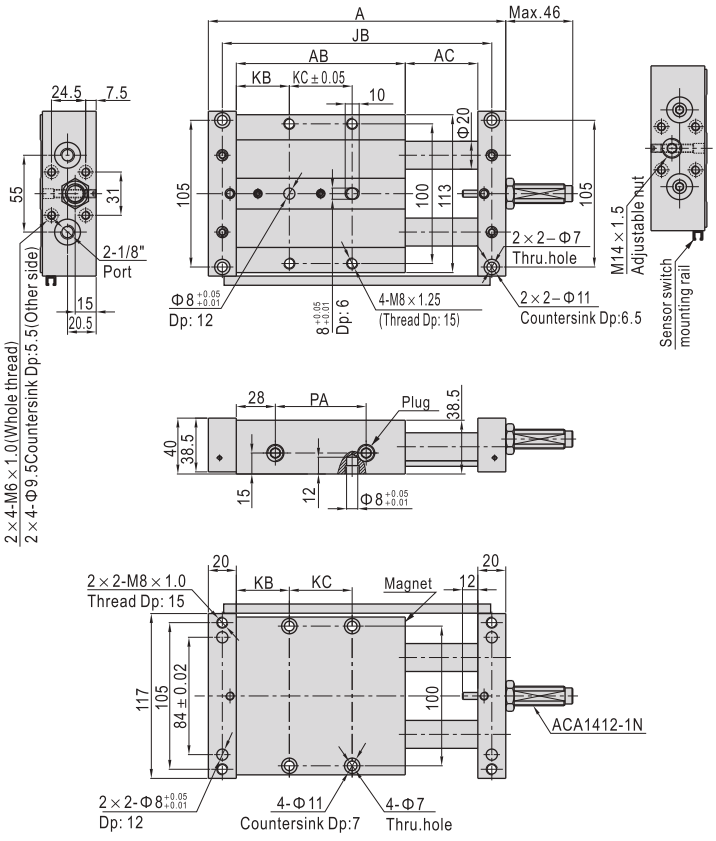

B Type(Body mounted)

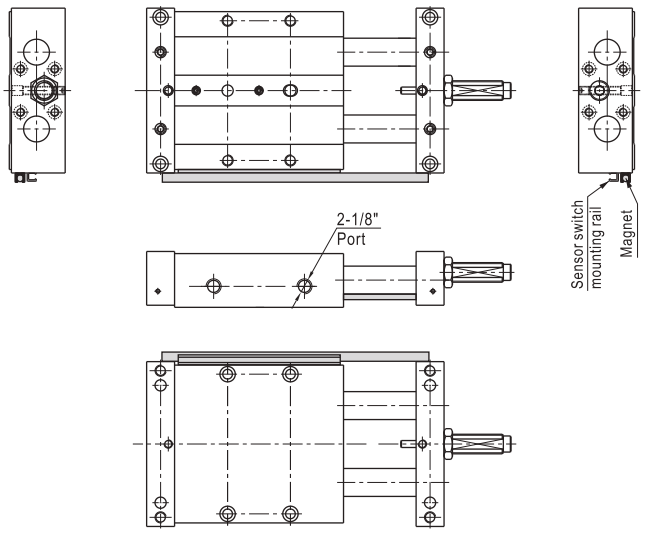

Stroke\Item	A	AB	AC	JB	KB	KC	PA
25	163	96	27	143	37	22	40
50	213	121	52	193	38	45	65

STW32 Stroke=75 100 125 150 175 200mm

A Type(Fixing plate mounted)

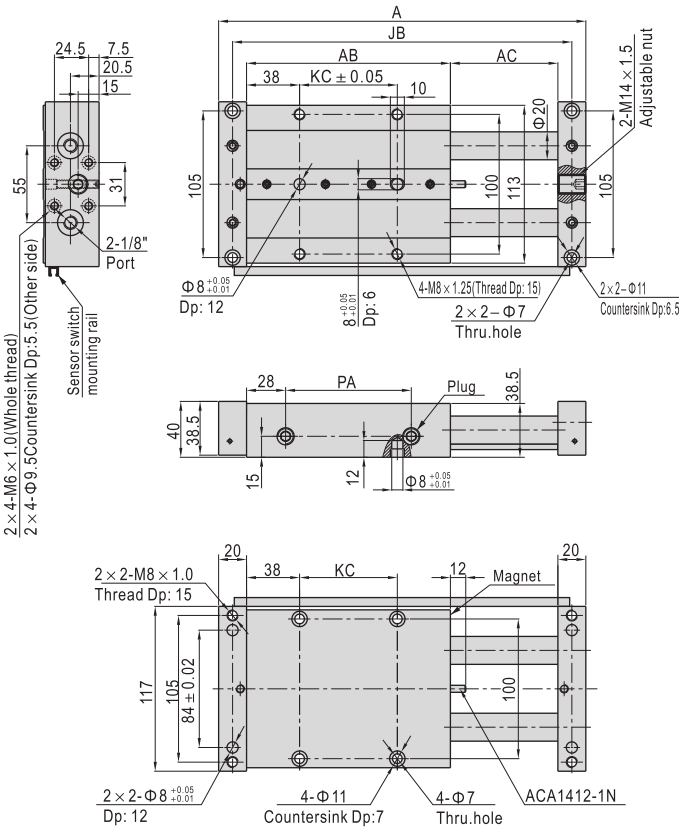

B Type(Body mounted)

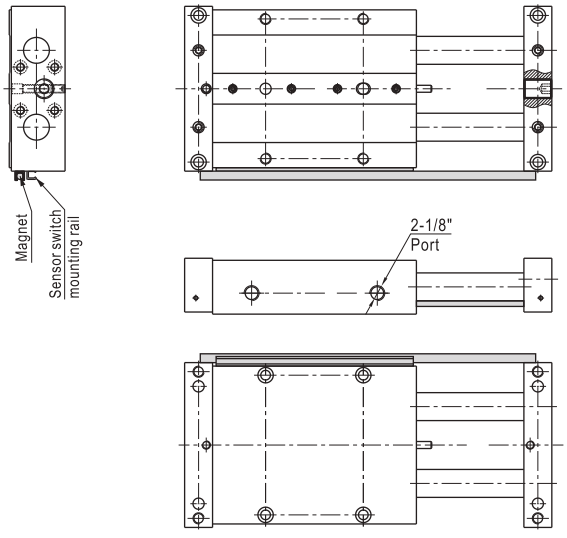

Stroke\Item	A	AB	AC	JB	KC	PA
75	263	146	77	243	70	90
100	313	171	102	293	95	115
125	363	196	127	343	120	140
150	413	221	152	393	145	165
175	463	246	177	443	170	190
200	513	271	202	493	195	215

Product series

Series name	Acting type	Bore size	Collocation of sensor switch DS1-H
HLH	Double acting	6 10 16 20	
Page: 260			381

Installation and application

1. Dirty substances in the pipe must be eliminated before cylinder is connected with pipeline to prevent the entrance of impurities into the cylinder.
2. The medium used by cylinder should be filtered to 40 μ m or below.
3. Anti-freezing measure shall be adopted under low temperature environment to prevent moisture freezing.
4. If the cylinder is dismantled and stored for a long time, pay attention to conduct anti-rust treatment to the surface. Anti-dust caps shall be added in air inlet and outlet ports.

Criteria for selection: Cylinder thrust

Unit: Newton(N)

Bore size (mm)	Rod size (mm)	Acting type		Pressure area (mm^2)	Operating pressure(MPa)						
					0.1	0.2	0.3	0.4	0.5	0.6	0.7
6	3	Double acting	Push side	28.3	-	5.7	8.5	11.3	14.2	17.0	19.8
			Pull side	21.2	-	4.2	6.4	8.5	10.6	12.7	14.8
10	4	Double acting	Push side	78.5	7.9	15.7	23.6	31.4	39.3	47.1	55.0
			Pull side	66.0	6.6	13.2	19.8	26.4	33.0	39.6	46.2
16	6	Double acting	Push side	201.0	20.1	40.2	60.3	80.4	100.5	120.6	140.7
			Pull side	172.7	17.3	34.5	51.8	69.1	86.4	103.6	120.9
20	8	Double acting	Push side	314.0	31.4	62.8	94.2	125.6	157.0	188.4	219.8
			Pull side	263.8	26.4	52.8	79.1	105.5	131.9	158.3	184.7

Specification

Bore size(mm)		6	10	16	20
Guide rail width mm		5	7	9	12
Acting type		Double acting			
Fluid		Air(to be filtered by 40 μ m filter element)			
Operating pressure	Φ6	0.15~0.7MPa(22~100psi)(1.5~7.0bar)			
	Others	0.06~0.7MPa(9~100psi)(0.6~7.0bar)			
Proof pressure		1.05MPa(150psi)(10.5bar)			
Temperature ℃		-20~70			
Speed range mm/s		50~500			
Allowable kinetic energy J		0.008	0.025	0.05	0.1
Stroke tolerance		$^{+1.0}_{0}$			
Cushion type		Bumper			
Sensor switches ①		DS1-H□N、DS1-H□P			
Port size		M5×0.8			

① Sensor switch should be ordered additionally, please refer to P381~402 for detail of sensor switch.

Stroke

Bore size (mm)	Standard stroke (mm)	Max. stroke
6	5 10 15 20 25 30	30
10	5 10 15 20 25 30 40 50	50
16, 20	5 10 15 20 25 30 40 50 60	60

Note) Consult us for non-standard stroke.

Symbol

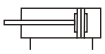

Product feature

1. Miniature linear roller ball bearing integrated wise cylinder.
2. With the excellent straightness and non-rotation precision, it is more suitable for precision assembly.
3. Mounting is possible from 4 directions.
4. Piping is possible from 3 directions.

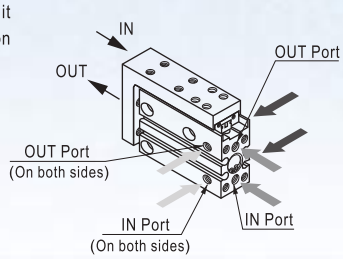

Ordering code

HLH 20 × 30 S

- **Model**: HLH: Compact slide cylinder(Double acting type)
- **Bore size**: 6, 10, 16, 20
- **Magnet**: S: With magnet
- **Stroke**: Refer to stroke table for details

Model Selection Method

1. Select the bore size according to the thrust and practicality. Refer to the table on page 259.
2. Determine the selection conditions in order, starting from the upper row in the table below, and choose one of the selection graphs to be used.

	Vertical			Horizontal								
Mounting position	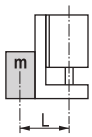			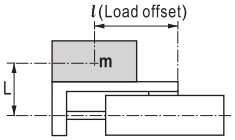								
Maximum speed(mm/s)	⩽100	⩽300	⩽500	⩽100			⩽300			⩽500		
Load offset *l* (mm)	–	–	–	50	100	200	50	100	200	50	100	200
Selection graph	(1)	(2)	(3)	(4)	(5)	(6)	(7)	(8)	(9)	(10)	(11)	(12)

L: Overhang
(the distance from the cylinder shaft centre to the load centre of gravity)

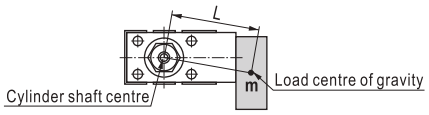

2.1) The relation between loading and overhang(Selection graphs)

Selection Graphs(1)
Maximum speed 100(mm/s) or less

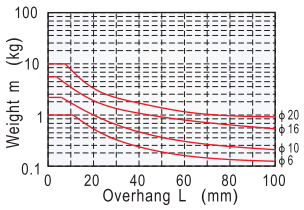

Selection Graphs(2)
Maximum speed 300(mm/s) or less

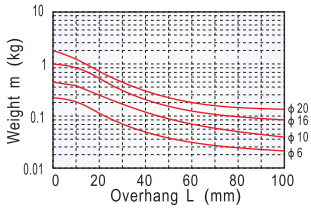

Selection Graphs(3)
Maximum speed 500(mm/s) or less

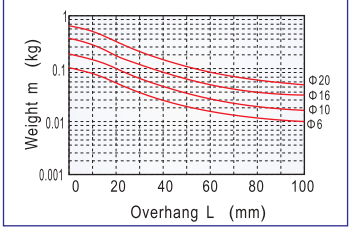

Selection Graphs(4)
Maximum speed 100(mm/s) or less
Load eccentricity 50mm

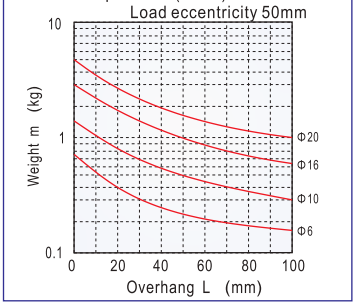

Selection Graphs(5)
Maximum speed 100(mm/s) or less
Load eccentricity 100mm

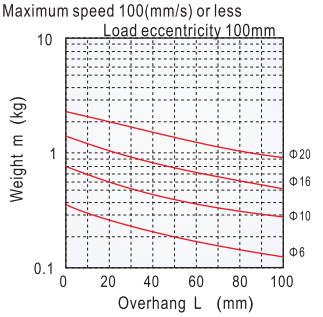

Selection Graphs(6)
Maximum speed 100(mm/s) or less
Load eccentricity 200mm

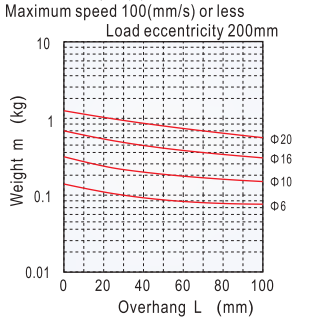

Selection Graphs(7)
Maximum speed 300(mm/s) or less
Load eccentricity 50mm

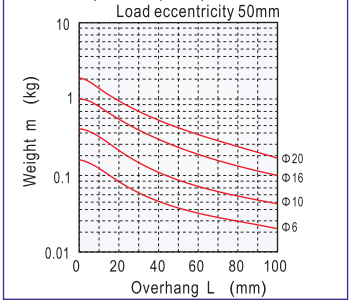

Selection Graphs(8)
Maximum speed 300(mm/s) or less
Load eccentricity 100mm

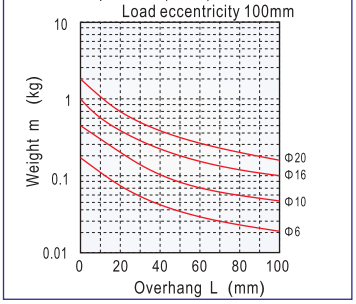

Selection Graphs(9)
Maximum speed 300(mm/s) or less
Load eccentricity 200mm

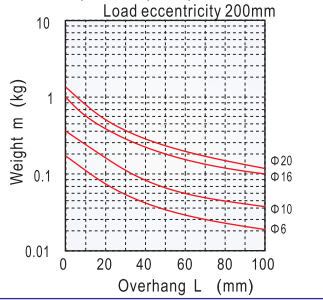

Selection Graphs(10)
Maximum speed 500(mm/s) or less
Load eccentricity 50mm

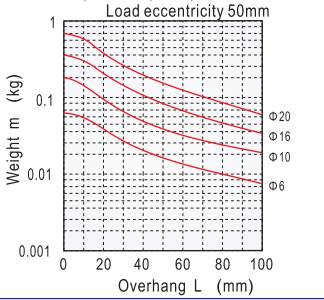

Selection Graphs(11)
Maximum speed 500(mm/s) or less
Load eccentricity 100mm

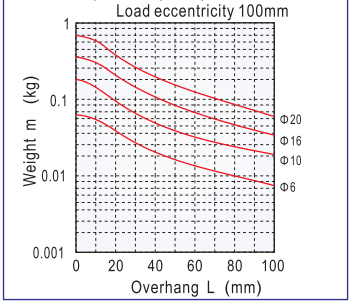

Selection Graphs(12)
Maximum speed 500(mm/s) or less
Load eccentricity 200mm

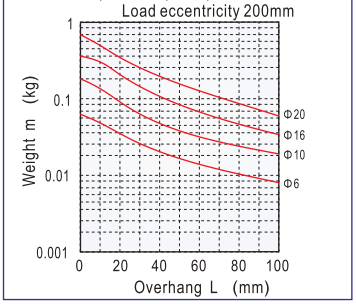

2.2) Selection Examples

Example ①: Mounting: Vertical
Maximum speed: 500mm/s
Overhang: 40mm
Load weight: 0.1Kg

Refer to Graph based on vertical mounting and a speed of 500mm/s. In Graph , find the intersection of a 40mm overhang and load weight of 0.1Kg, which results in a selection of ø20.

Example ②: Mounting: Horizontal
Maximum speed: 500mm/s
Load eccentricity: 50mm
Overhang: 30mm
Load weight: 0.1Kg

Refer to Graph based on horizontal mounting, a speed of 500mm/s and load eccentricity of 50mm.In Graph , find the intersection of a 30mm overhang and load weight of 0.1Kg, which results in a selection of ø16.

Installation and application

1. The actual loading and moment of cylinder must be less than it's allowable loading and moment:

1.1) The allowable moment of cylinder

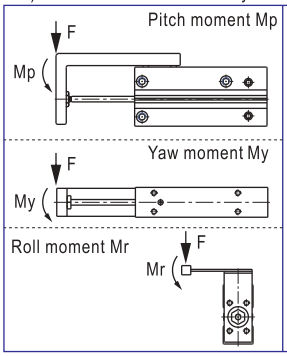

Model	Allowable torque (Nm)		
	Pitch moment Mp	Yaw moment My	Roll moment Mr
HLH6	0.25	0.25	0.41
HLH10	0.95	0.95	1.49
HLH16	3.28	3.28	3.45
HLH20	6.29	6.29	6.61

1.2) When the cylinder is subjected to different type of moment, there will be different degree of shift in performance, please refer to the following table for details.

Table deflection due to pitch moment

Table deflection (arrow) when a load acts upon the section marked with the arrow at the full stroke of the compact slide.

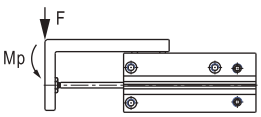

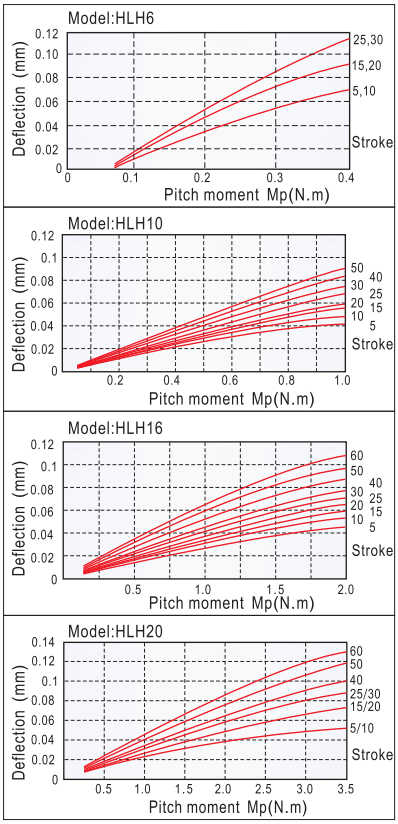

Table deflection due to yaw moment

Table deflection (arrow) when a load acts upon the section marked with the arrow at the full stroke of the compact slide.

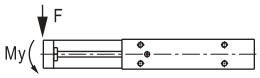

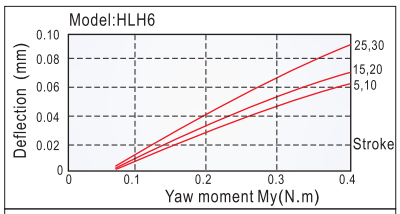

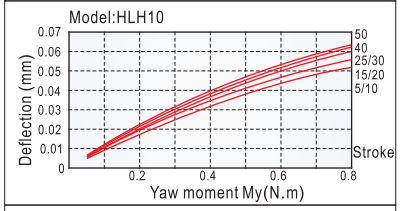

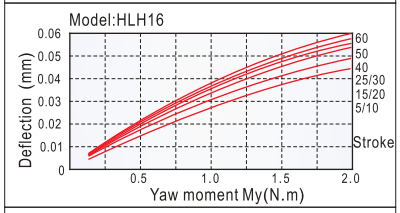

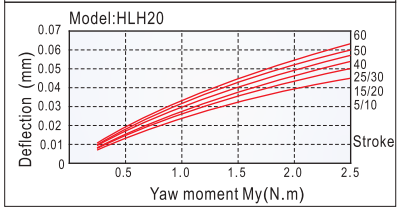

Table deflection due to roll moment

Table deflection(at A) when a load acts upon section F at the full stroke of the compact slide.

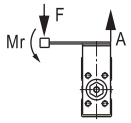

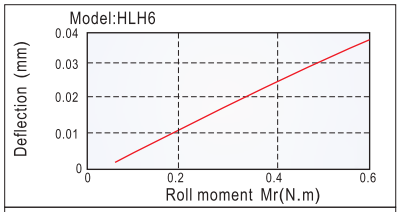

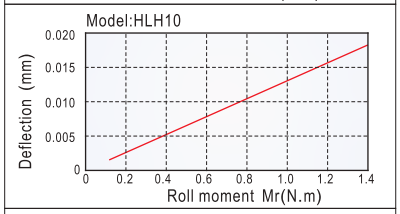

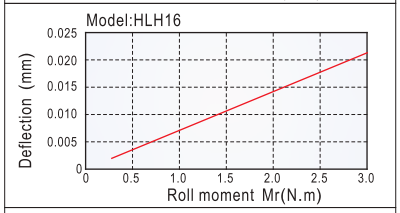

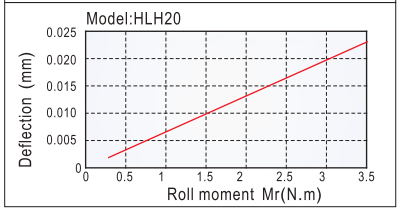

2. The compact slide can be piped from 3 directions. Confirm the pressure ports and operating direction. (See drawing right)

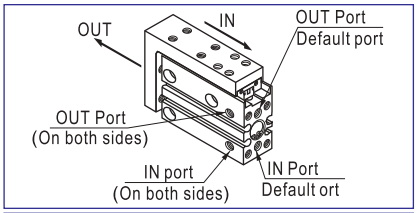

3. In compact slides with sensor switch, there is a danger of sensor switch malfunction if the mounting pitch is less than the dimensions shown in Table right. Be sure to allow at least the indicated interval.

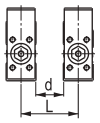

Model	At least indicated interval (mm)	
	d	L
HLH6	5	21
HLH10	5	25
HLH16	10	35
HLH20	15	47

4. When the output of the compact slide will be directly applied to the table, it should be applied along the rod axis. (See drawing below.)

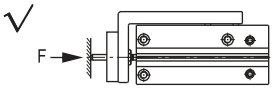

The loading and piston rod are coaxial

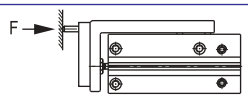

The loading and piston rod are offset

5. Be sure to use a flow control value, and adjust the speed to 500mm/s or less.

6. A compact slide can be mounted from 4 directions. Don't exceed the max.fastering torque then fightening the mounting bolts.

Lateral Mounting(Through Holes)

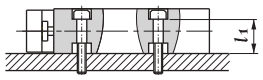

Model	Bolts	Max.fastening torque	L1
HLH6	M3 × 0.5	1.1(Nm)	12.7
HLH10	M4 × 0.7	2.5(Nm)	15.6
HLH16	M4 × 0.7	2.5(Nm)	20.6
HLH20	M5 × 0.8	5.1(Nm)	24.0

Lateral Mounting(Tapped Holes)

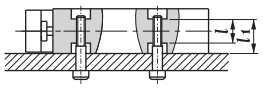

Model	Bolts	Max.fastening torque	L1	L
HLH6	M4 × 0.7	2.5(Nm)	12.7	9.4
HLH10	M5 × 0.8	5.1(Nm)	15.6	11.2
HLH16	M5 × 0.8	5.1(Nm)	20.6	16.2
HLH20	M6 × 1.0	8.1(Nm)	24.0	16.0

Vertical Mounting(Tapped Holes)

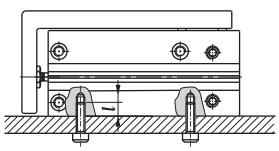

Model	Bolts	Max.fastening torque	L
HLH6	M3 × 0.5	1.1(Nm)	5
HLH10	M4 × 0.7	2.5(Nm)	6
HLH16	M4 × 0.7	2.5(Nm)	6
HLH20	M5 × 0.8	5.1(Nm)	8

Axial Mounting(Tapped Holes)

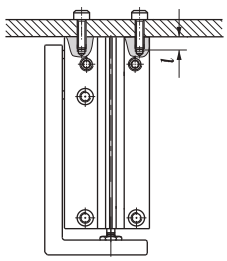

7. Work Piece Mounting

7.1) Work pieces can be mounted on 2 surfaces of the compact slide. When mounting a work piece, tighten the bolts properly at a torque value within the limiting range.

Front Mounting

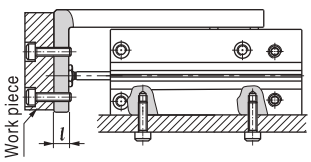

Model	Bolts	Max.fastening torque	L
HLH6	M3 × 0.5	1.1(Nm)	5.5
HLH10	M4 × 0.7	2.5(Nm)	7.5
HLH16	M4 × 0.7	2.5(Nm)	10
HLH20	M5 × 0.8	5.1(Nm)	11

Top Mounting

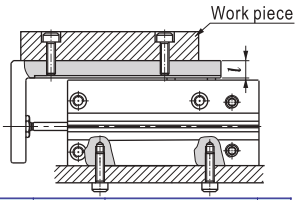

Model	Bolts	Max.fastening torque	L
HLH6	M3 × 0.5	1.1(Nm)	6.5
HLH10	M4 × 0.7	2.5(Nm)	8
HLH16	M4 × 0.7	2.5(Nm)	9
HLH20	M5 × 0.8	5.1(Nm)	9.5

7.2) Since the table is supported by the linear guide, take care not to apply strong impact or large moment to the guide section.
7.3) Hold the slide when fastening work pieces with bolts, If the body is held while tightening bolts, excessive moment may damage guide section.

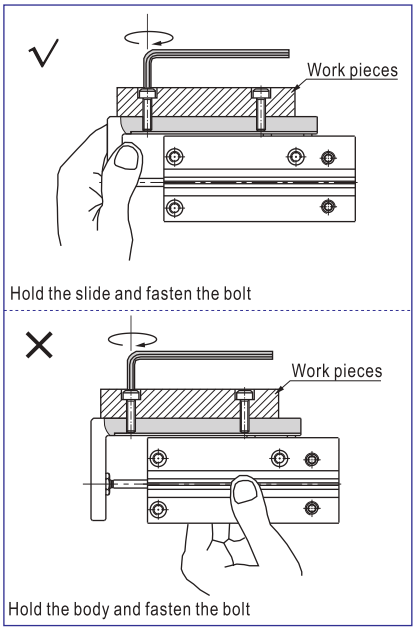

Inner structure

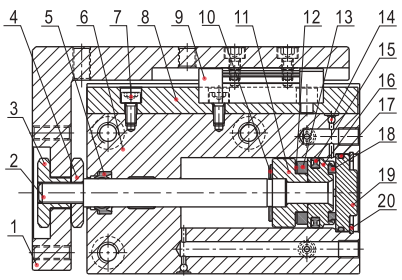

NO.	Item	Material
1	Slide table	Aluminum alloy
2	Piston rod	Stainless steel
3	Hexagon nut	Carbon steel
4	Hexagon nut	Carbon steel
5	Rod seal	NBR
6	Body	Aluminum alloy
7	Screw	Carbon steel
8	Linear guide	Stainless steel
9	Slide block	
10	Bumper	TPU
11	Magnet holder	Aluminum alloy
12	Magnet washer	NBR
13	Magnet	Sintered metal (Neodymium-iron-boron)
14	Steel ball	SUS304
15	Piston seal	NBR
16	Piston	Aluminum alloy
17	O-ring	NBR
18	Bumper	TPU
19	Back cover	Aluminum alloy
20	C clip	Spring steel

Dimensions

HLH6

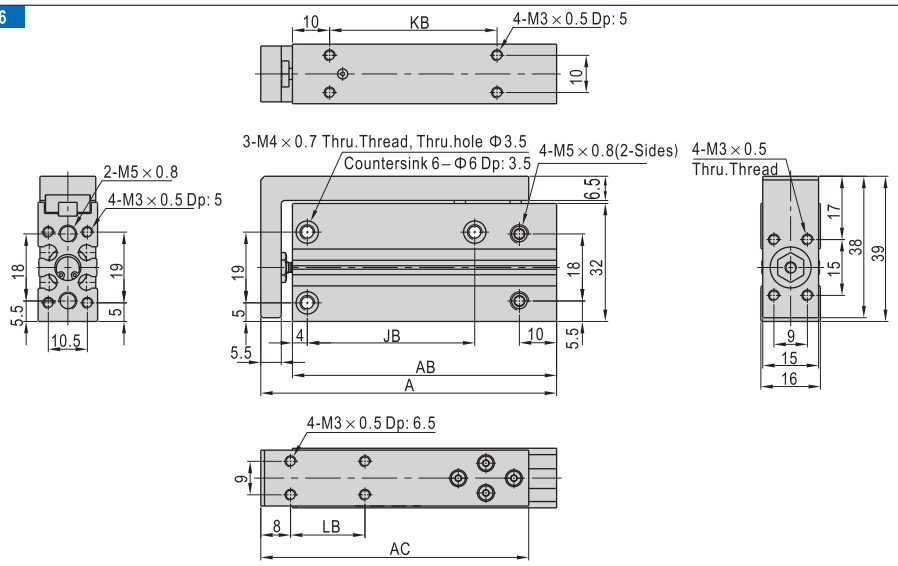

Stroke\Item	A	AB	AC	JB	KB	LB
5	44.5	36	42	14	10	10
10	49.5	41	42	14	15	10
15	54.5	46	52	24	20	20
20	59.5	51	52	24	25	20
25	64.5	56	62	30	30	30
30	69.5	61	62	30	35	30

HLH10

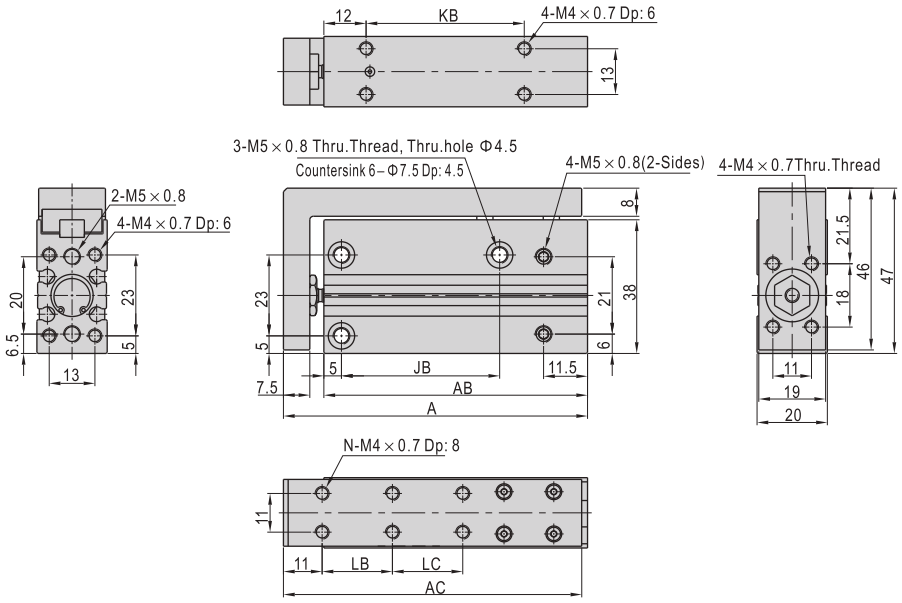

Stroke\Item	A	AB	AC	JB	KB	LB	LC	N
5	51.5	40	50	14	10	10	-	4
10	56.5	45	55	14	15	10	-	4
15	61.5	50	60.5	24	20	20	-	4
20	66.5	55	63	24	25	20	-	4
25	71.5	60	70.5	30	30	30	-	4
30	76.5	65	75.5	30	35	30	-	4
40	86.5	75	85.5	45	45	20	20	6
50	96.5	85	93	55	55	25	25	6

HLH16

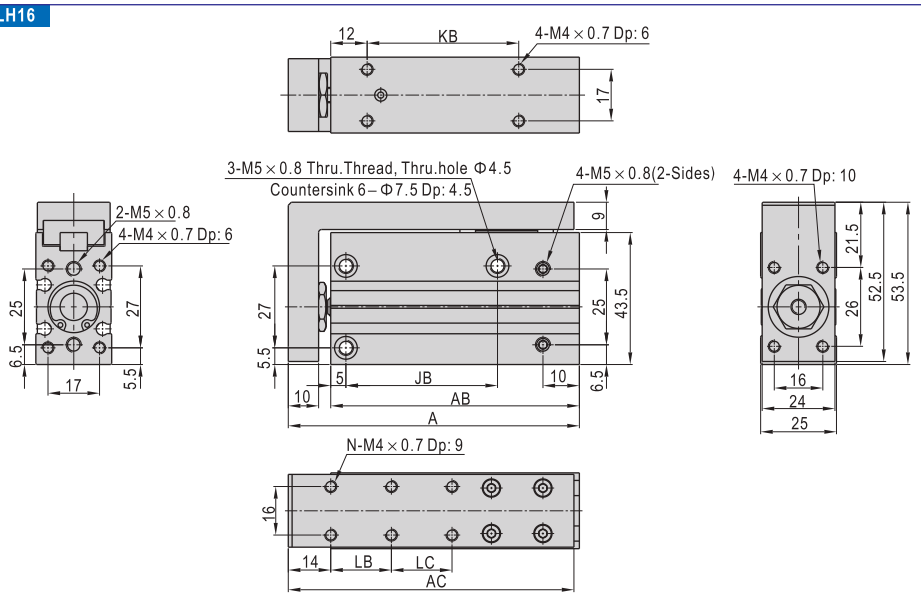

Stroke\Item	A	AB	AC	JB	KB	LB	LC	N
5	61	47	60	20	15	10	-	4
10	66	52	64.5	20	20	10	-	4
15	71	57	69.5	30	25	20	-	4
20	76	62	75	30	30	20	-	4
25	81	67	80	40	35	30	-	4
30	86	72	84.5	40	40	30	-	4
40	96	82	95	50	50	20	20	6
50	106	92	104.5	60	60	25	25	6
60	116	102	114.5	60	70	30	30	6

HLH20

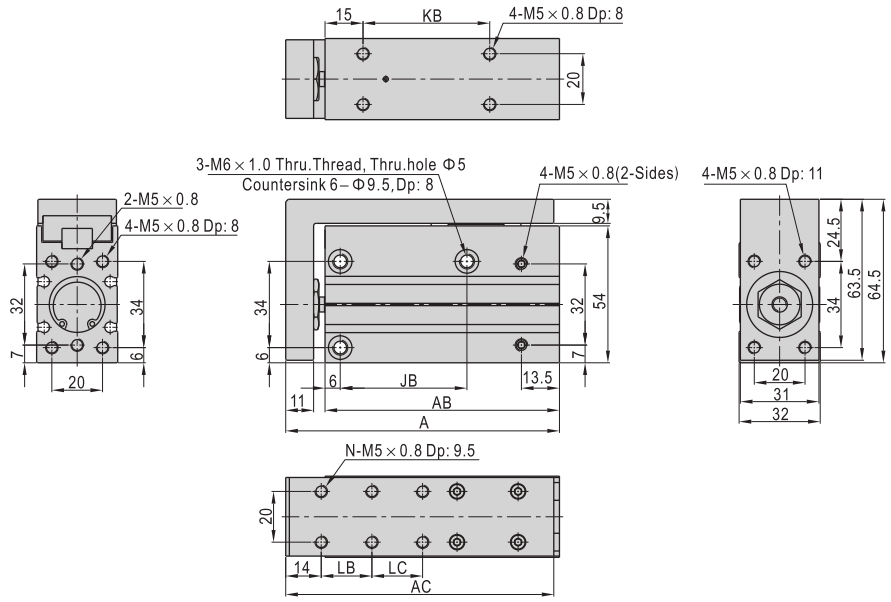

Stroke\Item	A	AB	AC	JB	KB	LB	LC	N
5	73	57.5	72	20	15	10	-	4
10	78	62.5	72	20	20	10	-	4
15	83	67.5	82	25	25	20	-	4
20	88	72.5	82	25	30	20	-	4
25	93	77.5	92	40	35	30	-	4
30	98	82.5	92	40	40	30	-	4
40	108	92.5	100	50	50	20	20	6
50	118	102.5	113.5	70	60	25	25	6
60	128	112.5	122.5	70	70	30	30	6

Product series

Series name	Acting type	Bore size	Collocation of sensor switch DS1-H
HLQ	Double acting	6 8 12 16 20 25	
Page 266			381

Installation and application

1. Dirty substances in the pipe must be eliminated before cylinder is connected with pipeline to prevent the entrance of impurities into the cylinder.
2. The medium used by cylinder should be filtered to 40 μ m or below.
3. Anti-freezing measure shall be adopted under low temperature environment to prevent moisture freezing.
4. If the cylinder is dismantled and stored for a long time, pay attention to conduct anti-rust treatment to the surface. Anti-dust caps shall be added in air inlet and outlet ports.

Criteria for selection: Cylinder thrust

Unit：Newton(N)

Bore size (mm)	Rod size (mm)	Acting type		Pressure area (mm^2)	Operating pressure(MPa)					
					0.2	0.3	0.4	0.5	0.6	0.7
6	3	Double acting	Push side	42	8	13	17	21	25	29
			Pull side	57	11	17	23	29	34	40
8	4	Double acting	Push side	75	15	23	30	38	45	53
			Pull side	101	20	30	40	51	61	71
12	6	Double acting	Push side	170	34	51	68	85	102	119
			Pull side	226	45	68	90	113	136	158
16	8	Double acting	Push side	302	60	91	121	151	181	211
			Pull side	402	80	121	161	201	241	281
20	10	Double acting	Push side	471	94	141	188	236	283	330
			Pull side	628	126	188	251	314	377	440
25	12	Double acting	Push side	756	151	227	302	378	454	529
			Pull side	982	186	295	393	491	589	687

Specification

Bore size(mm)	6	8	12	16	20	25
Guide rail width (mm)	10	10	7	9	9	12
Number of guide rail	Single guide rail		Double guide rail			
Acting type	Double acting					
Fluid	Air(to be filtered by 40 μ m filter element)					
Operating pressure	0.15~0.7MPa(22~100psi)(1.5~7.0bar)					
Proof pressure	1.05MPa(150psi)(10.5bar)					
Temperature ℃	-20~70					
Speed range mm/s	50~500					
Stroke tolerance	$0\sim100^{+1.0}_{0}$		$>100^{+1.5}_{0}$			
Cushion type	Bumper(Both ends), Shock absorber					
Sensor switches ①	DS1-H□N、DS1-H□P					
Port size	M5×0.8				1/8"	

① Sensor switch should be ordered additionally, please refer to P381~402 for detail of sensor switch.

Stroke

Bore size (mm)	Standard stroke (mm)	Max. stroke (mm)
6	10 20 30 40 50	50
8	10 20 30 40 50 75	75
12	10 20 30 40 50 75 100	100
16	10 20 30 40 50 75 100 125	125
20	10 20 30 40 50 75 100 125 150	150
25	10 20 30 40 50 75 100 125 150	150

Note) Consult us for non-standard stroke.

Symbol

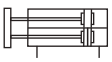

Product feature

1. Recirculating linear ball bearing, it achieves high precision, high rigidity, with antirust and dustproof function
2. Through hole for body mounting
3. Pin holes for positioning
   Improved repeatability of work mounting

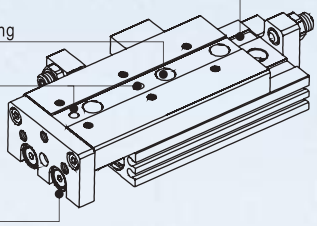

4. Floating joint design
   Piston rod needn't endure additional torque
5. Dual rod-doubles the output thrust
6. Pin holes for positioning
   Improved repeatability of body mounting
7. Body mounting holes provide 3 mounting positions

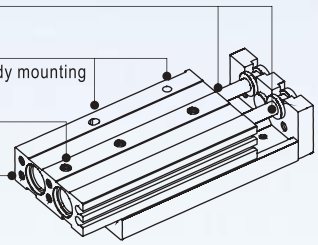

8. Two models (HLQ/HLQL) are available for choosing due to different designs of sensor slots and flexible cushioning elements.

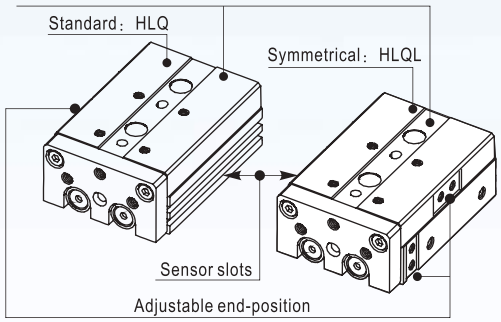

Ordering code

HLQ 20×30 S AS G

Model
- HLQ: Compact slide cylinder (Double acting type) (Recirculating linear ball bearing)
- HLQL: Symmetrical Compact slide cylinder (Double acting type) (Recirculating linear ball bearing)

Bore size
6, 8, 12, 16, 20, 25

Stroke
Refer to stroke table for details

Magnet
S: With magnet

Thread type ①
- G: G
- T: NPT

Adjuster option ②

Blank: Without adjuster(Basic type)

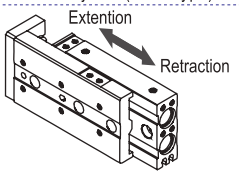

A: Adjustable rubber stopper(Both ends)

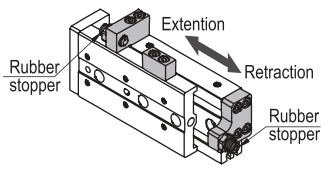

B: Shock absorber(Both ends)

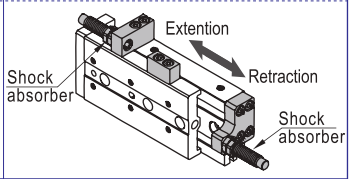

AS: Adjustable rubber stopper(Extention)

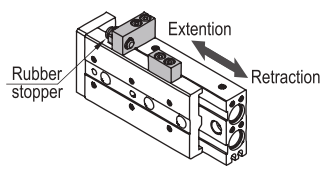

BS: Shock absorber(Extention)

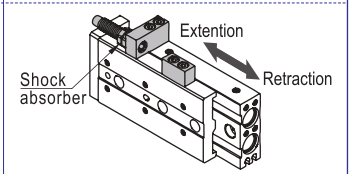

AF: Adjustable rubber stopper(Retraction)

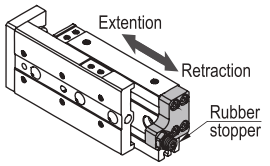

BF: Shock absorber(Retraction)

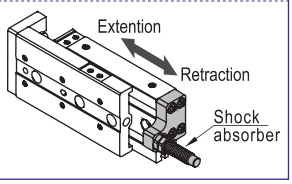

① When the thread is standard, the code is blank.
② B type, BS type, BF type are unavailable for bore size of Φ6.

Model Selection Method

Please select compact cylinder's type according to following procedure, and cross reference with data sheets.

1) Operating conditions(According to mounting position and work form)

1. Model used(Bore size, Stroke)
2. Type of cushion(Bumper, Shock absrober)
3. Mounting position of work(Top, front)
4. Mounting direction(Axial, Vertical)
5. Average speed Va(mm/s)
6. Applied load W(N) **Fig. 1**
7. Overhang L1, L2, L3(mm)

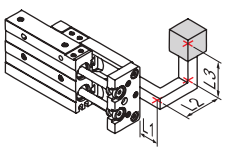

Explain: L1 is the distance of load's center beyond the end plank's plane. If load's center is not beyond the end plank's plane, L1 is negative.

Fig. 1: Applied load

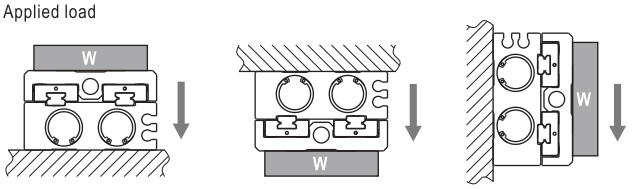

2) Kinetic energy check

Steps

1. Calculate kinetic energy of load E(J)

$$E=\frac{1}{2}\times\frac{W}{g}\times\left(\frac{1.4\times Va}{1000}\right)^2$$

2. Calculate allowable kinetic energy Ea(J)

$$Ea=K\times E_{max}$$

K:Mounting work coefficient (**Fig 2**)

E_{max}:Maximum allowable kinetic energy (**Table 1**)

3. Check that kinetic energy of load doesn't exceed allowable kinetic energy:

$$E\leqslant Ea$$

3) Load check

Steps

1. Calculate allowable applied load Wa (N)

$$Wa=K\times\beta\times W_{max}$$

K:Mounting work coefficient (**Fig 2**)

W_{max}:Maximum allowable applied load(**Table 1**)

β :Applied load coefficient (**Fig 3**)

2. Check that load(W) doesn't exceed allowable applied load(Wa):

$$W\leqslant Wa$$

Fig 2: Mounting work coefficient (K)

Top

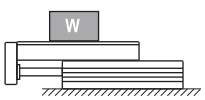

Mounting work coefficient K=1

Front

Mounting work coefficient K=0.6

Fig 3: Applied load coefficient (β)

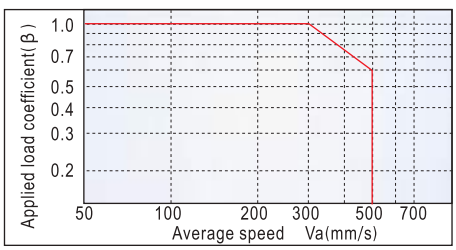

4) Moment check

Steps

Horizontal

1. Calculate actual moment: Mp、Mpo、My、Myo、Mr、Mro (Nm)

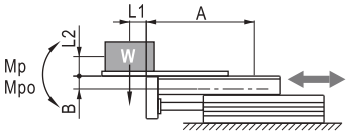

Dynamic moment:
$Mp=W\times(L1+A)/1000$

Static moment:
$Mpo=\frac{W\times(L1+A)}{1000}+\frac{W\times a\times(L2+B)}{1000\times g}$

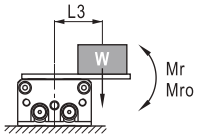

Dynamic moment:
$Mr=W\times L3/1000$

Static moment:
$Mro=(W\times a\times L3)/1000g$

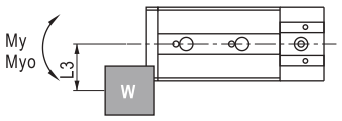

Dynamic moment:
$My=0$

Static moment:
$Myo=(W\times a\times L3)/1000g$

2. Check

Dynamic moment:	$\frac{Mp}{Mp_{max}}+\frac{My}{My_{max}}+\frac{Mr}{Mr_{max}}\leqslant 1$
Static moment:	$\frac{Mpo}{Mpo_{max}}+\frac{Myo}{Myo_{max}}+\frac{Mro}{Mro_{max}}\leqslant 1$

Vertical

1. Calculate actual moment: Mp、Mpo、My、Myo(Nm)

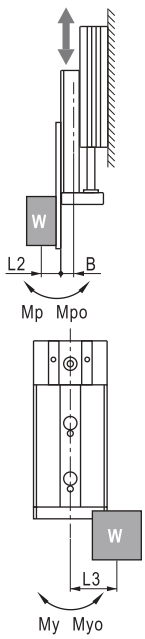

Dynamic moment:
$Mp=W\times(L2+B)/1000$

Static moment:
$Mpo=\frac{W\times(L2+B)}{1000}+\frac{W\times a\times(L2+B)}{1000\times g}$

Dynamic moment:
$My=W\times L3/1000$

Static moment:
$Myo=\frac{W\times a\times L3}{1000g}+\frac{W\times L3}{1000}$

2. Check

Dynamic moment:	$\frac{Mp}{Mp_{max}}+\frac{My}{My_{max}}\leqslant 1$
Static moment:	$\frac{Mpo}{Mpo_{max}}+\frac{Myo}{Myo_{max}}\leqslant 1$

Explain:
L1, L2, L3: The distance of load center to mount plane(Determined by actuality).
A, B: Correction value for center position distance of moment(Refer to table 2).
Mp_{max}, My_{max}, Mr_{max}, Mpo_{max}, Myo_{max}, Mro_{max}: Maximum allowable moment(Refer to table 2).
g: Acceleration of gravity($g=9.81m/s^2$).
a: Acceleration of inertia
(Bumper: $a=1600\times(Va/1000)^2$, Shock absorber: $a=400\times(Va/1000)^2$)
W: Load weight(Determined by actuality).

HLQ

Note: Symbol and unit

Symbol	Item	Unit
A, B	Correction value for center position distance of moment	mm
a	Acceleration of inertia	–
E	Kinetic energy	J
Ea	Allowable kinetic energy	J
Emax	Maximum allowable kinetic energy	J
g	Acceleration of gravity g=9.81	m/s^2
K	Mounting work coefficient	–
L1, L2, L3	Overhang	mm
Mp, My, Mr	Dynamic moment(Pitch、Yaw、Roll)	Nm
Mp_{max}, My_{max}, Mr_{max}	Maximum allowable dynamic moment(Pitch、Yaw、Roll)	Nm
Mpo, Myo, Mro	Static moment(Pitch、Yaw、Roll)	Nm
Mpo_{max}, Myo_{max}, Mro_{max}	Maximum allowable static moment(Pitch、Yaw、Roll)	Nm
Va	Average speed	mm/s
W	Applied load	N
Wmax	Maximum allowable applied load	N
β	Applied load coefficient	-

Table 1: Maximum allowable kinetic energy(Emax), Maximum allowable applied load(Wmax)

Model	Max. allowable kinetic energy Emax(J)			Max. allowable applied load Wmax(N)
	Basic type	Rubber stopper type	Shock absorber type	
HLQ6	0.01	0.01	–	4
HLQ8	0.024	0.024	0.048	8
HLQ12	0.05	0.05	0.1	15
HLQ16	0.1	0.1	0.2	30
HLQ20	0.13	0.13	0.26	40
HLQ25	0.22	0.22	0.44	70

Table 2: Maximum allowable moment(Nm), Correction value for center position distance of moment(mm)

Bore size	Stroke	Static moment			Dynamic moment			Correction value	
		Mpo_{max}	Myo_{max}	Mro_{max}	Mp_{max}	My_{max}	Mr_{max}	A	B
6	10	3.3	3.8	2.6	0.7	0.7	0.6	30	7
	20	3.3	3.8	2.6	0.7	0.8	0.6	40	
	30	3.3	3.8	2.6	0.7	0.8	0.6	50	
	40	7.2	7.9	3.6	1.3	1.3	0.6	60	
	50	12.4	12.7	4.7	1.8	1.8	0.6	70	
8	10	10.1	9.1	8.8	2.5	2.5	2.0	30	7
	20	10.1	9.1	8.8	2.6	2.6	2.0	40	
	30	10.1	9.1	8.8	2.8	2.8	2.0	50	
	40	12.4	10.8	10.1	3.4	3.4	2.3	60	
	50	23.6	24.8	13.9	4.4	4.4	2.1	70	
	75	32.8	35.3	16.4	4.6	4.6	1.8	95	
12	10	8.5	8.5	13.6	2.5	2.5	4	32	11
	20	8.5	8.5	13.6	2.5	2.5	4	44	
	30	8.5	8.5	13.6	2.5	2.5	4	54	
	40	8.5	8.5	13.6	2.5	2.5	4	62	
	50	8.5	8.5	13.6	2.5	2.5	4	72	
	75	52.3	52.3	85.6	18.9	18.9	13	115	
	100	53.9	53.9	86.9	19.5	19.5	13	142	
16	10	33.6	33.6	35.2	8.4	8.4	8.8	49	12
	20	33.6	33.6	35.2	8.4	8.4	8.8	49	
	30	33.6	33.6	35.2	8.4	8.4	8.8	59	
	40	33.6	33.6	35.2	8.4	8.4	8.8	69	
	50	33.6	33.6	35.2	8.4	8.4	8.8	79	
	75	70.2	70.2	62.5	28.1	28.1	25	120	
	100	76.6	76.6	62.5	38.3	38.3	25	150	
	125	78	78	62.5	39	39	25	175	
20	10	34.8	34.8	36.8	8.7	8.7	9.2	53	14
	20	34.8	34.8	36.8	8.7	8.7	9.2	53	
	30	34.8	34.8	36.8	8.7	8.7	9.2	63	
	40	34.8	34.8	36.8	8.7	8.7	9.2	73	
	50	34.8	34.8	36.8	8.7	8.7	9.2	83	
	75	70.2	70.2	74.5	28.1	28.1	29.7	123	
	100	76.6	76.6	74.5	38.3	38.3	29.7	157	
	125	78	78	74.5	39	39	29.7	178	
	150	98.4	98.4	74.5	49.2	49.2	29.7	210	
25	10	56.7	56.7	51	16.2	16.2	17	60	17
	20	56.7	56.7	51	16.2	16.2	17	60	
	30	56.7	56.7	51	16.2	16.2	17	70	
	40	56.7	56.7	51	16.2	16.2	17	80	
	50	56.7	56.7	51	16.2	16.2	17	90	
	75	122.5	122.5	138.5	49	49	55.4	130	
	100	173.8	173.8	138.5	79	79	55.4	168	
	125	217	217	138.5	108.6	108.6	55.4	205	
	150	221.8	221.8	138.5	110.9	110.9	55.4	230	

Inner structure

Basic type

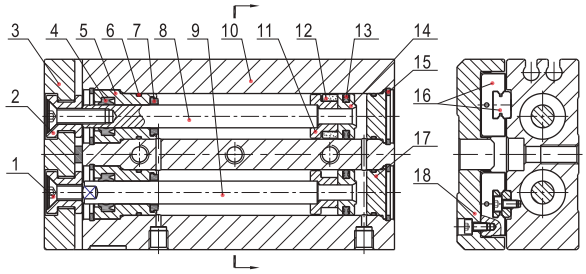

NO.	Item	Material
1	Screw	Carbon steel
2	Floating joint	Carbon steel
3	Fixing plate	Aluminum alloy
4	Rod seal	NBR
5	Front cover	Aluminum alloy
6	O–ring	NBR
7	Bumper	TPU
8	Piston rod A	Stainless steel
9	Piston rod B	Carbon steel
10	Body	Aluminum alloy
11	Magnet holder	Brass
12	Magnet	Sintered metal(Neodymium-iron-boron)
13	Piston seal	NBR
14	Piston	Brass
15	C clip	Spring steel
16	Linear guide combination	
17	Back cover	Brass
18	Slide table	Aluminum alloy

HLQ

Installation and application

1. How to mount cylinder:

1.1) Cylinder can to be mounted from 3 directions

Vertical Mounting(Body thread holes)

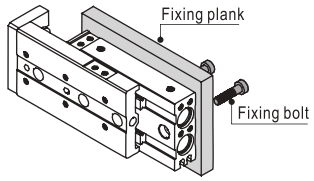

Axial Mounting(Body thread holes)

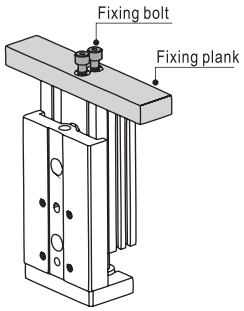

Vertical Mounting(Body through holes)

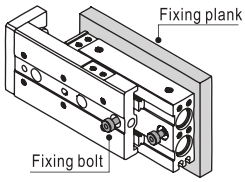

1.2) When mounting an compact slide cylinder, screws of appropriate length should be used and tightened properly within the maximum tightening torque. If screws are tightened beyond designed limits, malfunction may occur. If they are tightened insufficiently, it may result in sliding of falling off from its position.

Vertical Mounting(Body thread holes)

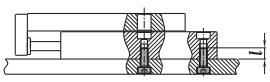

Model	Bolt used	Max. tightening torque (Nm)	Max. screw–in depth(mm)
HLQ6	M4 × 0.7	2.1	8
HLQ8	M4 × 0.7	2.1	8
HLQ12	M5 × 0.8	4.4	10
HLQ16	M6 × 1.0	4.4	10
HLQ20	M6 × 1.0	7.4	12
HLQ25	M8 × 1.25	18.0	16

Vertical Mounting(Body through holes)

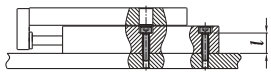

Model	Bolt used	Max. tightening torque (Nm)	Max. screw–in depth(mm)
HLQ6	M3 × 0.5	1.2	8.0
HLQ8	M3 × 0.5	1.2	9.6
HLQ12	M4 × 0.7	2.8	13.4
HLQ16	M5 × 0.8	5.7	16.7
HLQ20	M5 × 0.8	5.7	22.0
HLQ25	M6 × 1.0	10.0	27.0

Axial Mounting(Body thread holes)

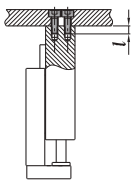

Model	Bolt used	Max. tightening torque (Nm)	Max. screw–in depth(mm)
HLQ6	M2.5 × 0.45	0.5	3.5
HLQ8	M3 × 0.5	0.9	4.0
HLQ12	M4 × 0.7	2.1	6.0
HLQ16	M5 × 0.8	4.4	7.0
HLQ20	M5 × 0.8	4.4	8.0
HLQ25	M6 × 1.0	7.4	10.0

2. Work Piece Mounting:

2.1) Work pieces can be mounted on 2 surfaces of the compact slide.

Front Mounting

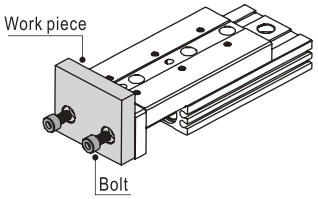

Top Mounting

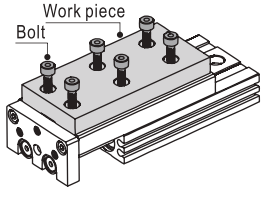

2.2) When mounting a work piece, tighten the bolts properly at a torque value within the limiting range. Use blots at least 0.5mm shorter than maximum thread depth to prevent bolts from contacting the guide block. If the bolts are too long, they hit the guide block and cause damage.

Front Mounting

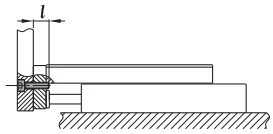

Model	Bolt used	Max. tightening torque (Nm)	Max. screw–in depth(mm)
HLQ6	M3 × 0.4	0.9	5
HLQ8	M4 × 0.7	2.1	6
HLQ12	M5 × 0.8	4.4	8
HLQ16	M6 × 1.0	7.4	10
HLQ20	M6 × 1.0	7.4	13
HLQ25	M8 × 1.25	18.0	15

Top Mounting

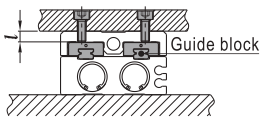

Model	Bolt used	Max. tightening torque (Nm)	Max. screw–in depth(mm)
HLQ6	M3 × 0.5	0.9	4.7
HLQ8	M3 × 0.5	0.9	4.7
HLQ12	M4 × 0.7	2.1	5.0
HLQ16	M5 × 0.8	4.4	5.0
HLQ20	M5 × 0.8	4.4	8.0
HLQ25	M6 × 1.0	7.4	9.0

2.3) Since the table is supported by the linear guide, take care not to apply strong impact or large moment to the guide section.

2.4) Hold the slide when fastening work pieces to it with bolts, If the body is held while tightening bolts, excessive moment may damage guide section.

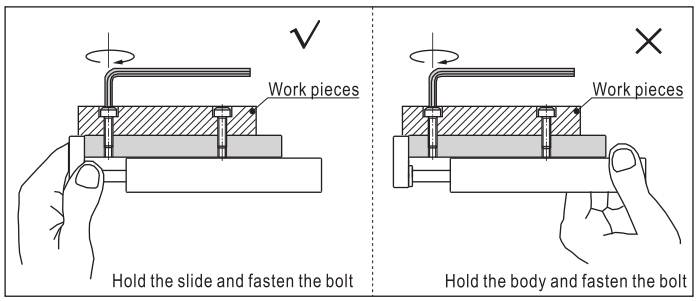

3. About shock absorber:

3.1) Shock absorbers are expendable. Promptly replace them when energy absorbing capacity decreases.

3.2) Never turn or adjust the screws on bottom of the shock absorber body. The screws are not for adjusting. Otherwise would cause oil leakage.

3.3) Follow the table for tightening torque of shock absorber to lock nuts.

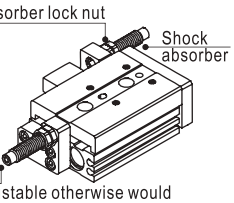

Model	Shock absorber	Tightening torque
HLQ6	Without shock absorber	
HLQ8	ACA0806-1N	1.67(Nm)
HLQ12	ACA0806-1N	1.67(Nm)
HLQ16	ACA1007-1N	3.14(Nm)
HLQ20	ACA1210-1N	3.14(Nm)
HLQ25	ACA1412-1N	10.8(Nm)

4. How to mount sensor switch:

4.1) HLQ Series are all with magnet. The matching sensor switches are DS1–H, DS1–HL series. Please refer to page 381~402 for details.

4.2) Maintain a minimum spacing of at least 3mm if two compact cylinders are used side by side in order to avoid malfunction.

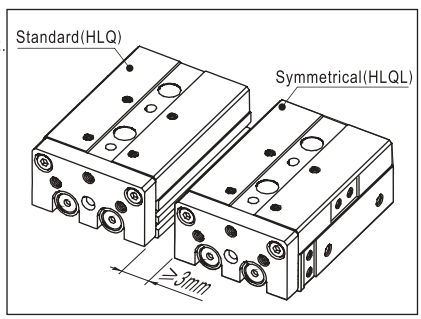

5. Make sure to connect the compact cylinder to speed controller at the meter–out side, and the speed of compact cylinder must below 500mm/s.

6. Don't apply a load beyond the range of the operation limits. Different load or torque will cause different deflection to table, please see below for details.

HLQ

6.1) Table deflection due to pitch moment:

Table deflection (arrow) when a load acts upon the section marked with the arrow at the full stroke of the compact slide.

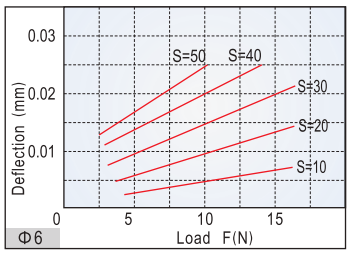

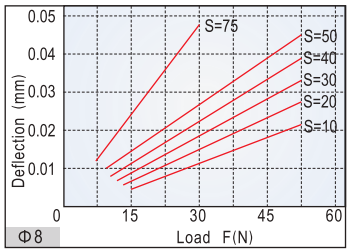

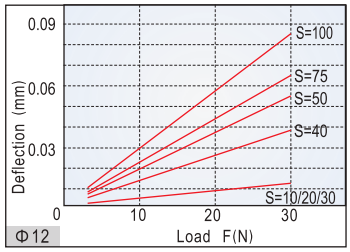

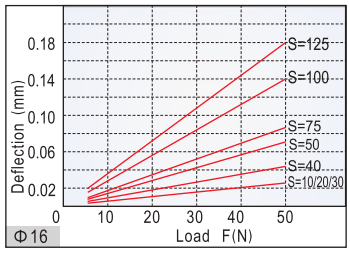

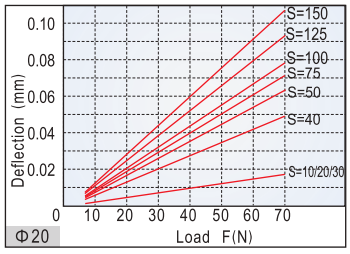

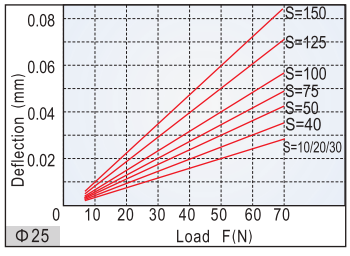

6.2) Table deflection due to yaw moment:

Table deflection (arrow) when a load acts upon the section marked with the arrow at the full stroke of the compact slide.

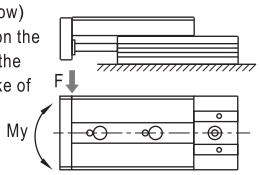

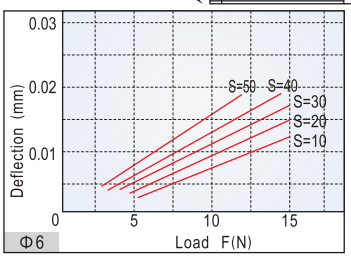

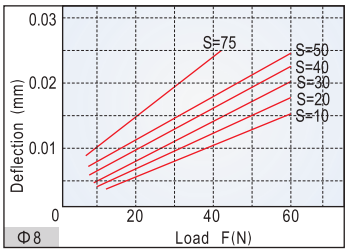

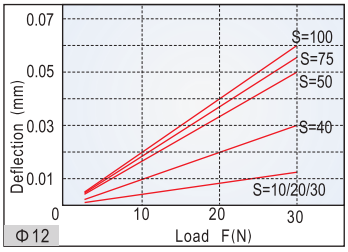

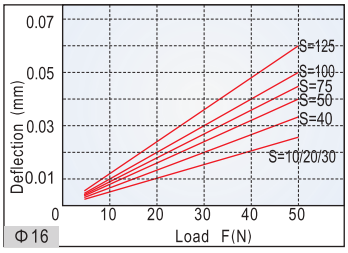

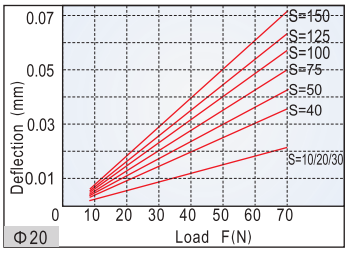

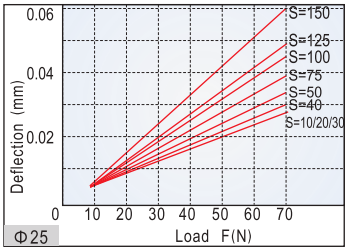

6.3) Table deflection due to roll moment:

Table deflects (A) when a load acts upon section F at the full stroke of the compact slide.

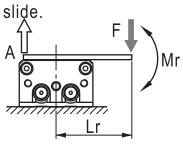

Lr=70mm

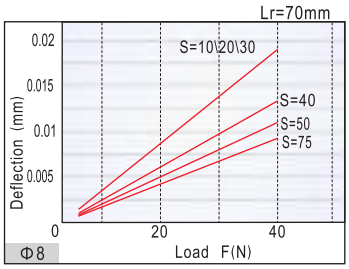

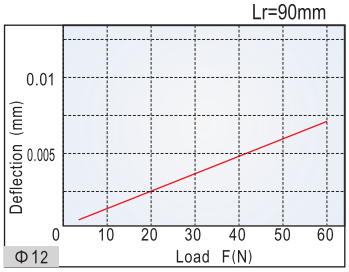

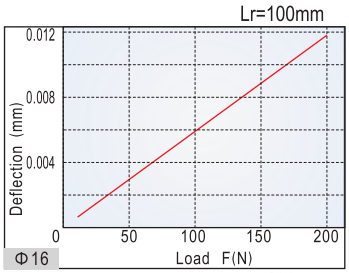

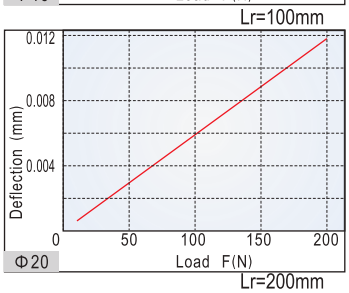

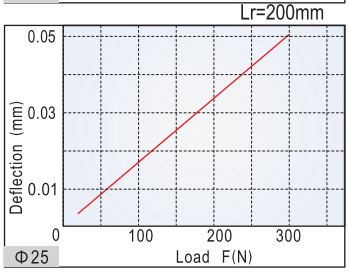

HLQ

Dimensions

HLQ6

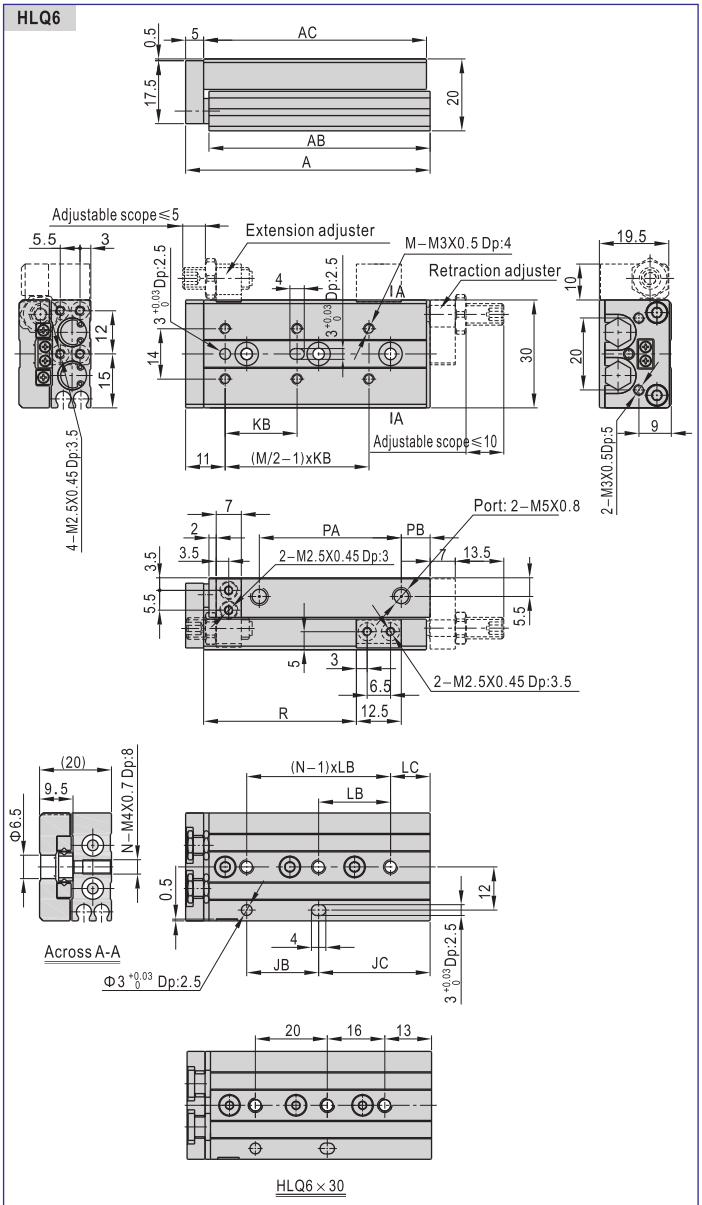

Stroke\Item	A	AB	AC	JB	JC	KB	LB	LC	M	N	PA	PB	R
10	48	41.5	42	16	13	22	23	6	4	2	16	9	21.5
20	58	51.5	52	26	13	25	26	13	4	2	26	9	31.5
30	68	61.5	62	20	29	21	–	–	6	3	36	9	41.5
40	86	79.5	80	28	39	26	28	11	6	3	47	16	51.5
50	96	89.5	90	28	49	27	28	21	6	3	64	9	61.5

HLQL6

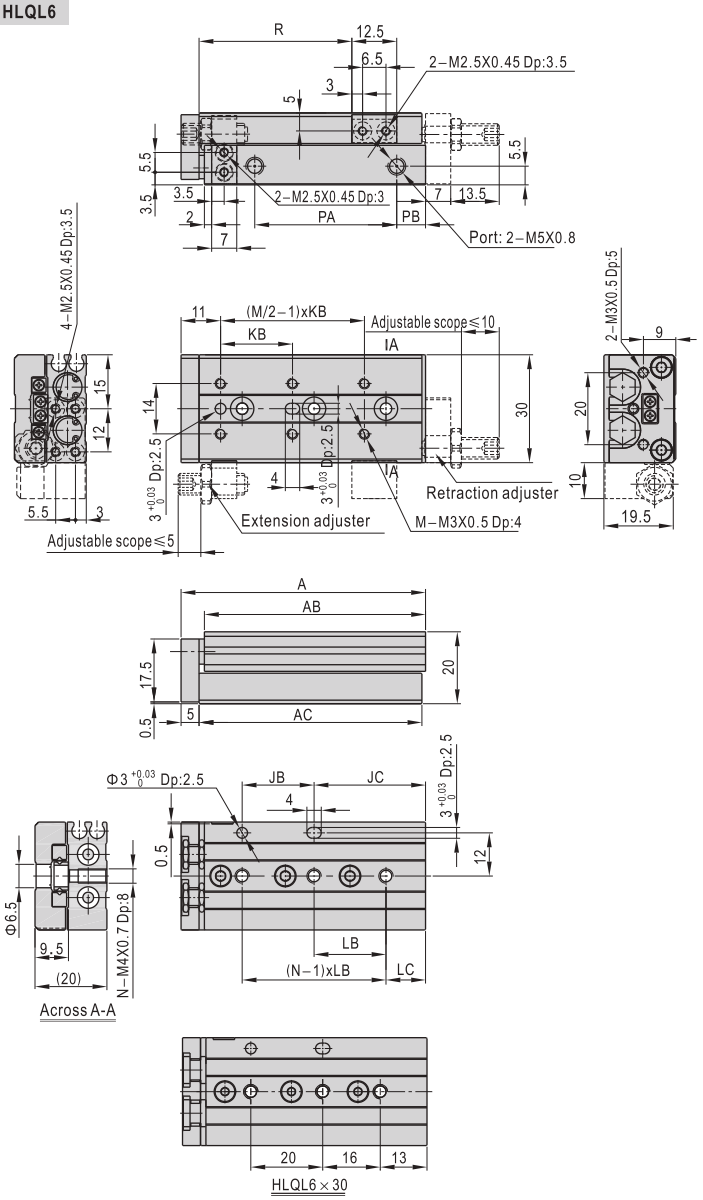

Stroke\Item	A	AB	AC	JB	JC	KB	LB	LC	M	N	PA	PB	R
10	48	41.5	42	16	13	22	23	6	4	2	16	9	21.5
20	58	51.5	52	26	13	25	26	13	4	2	26	9	31.5
30	68	61.5	62	20	29	21	–	–	6	3	36	9	41.5
40	86	79.5	80	28	39	26	28	11	6	3	47	16	51.5
50	96	89.5	90	28	49	27	28	21	6	3	64	9	61.5

HLQ Series

HLQ8

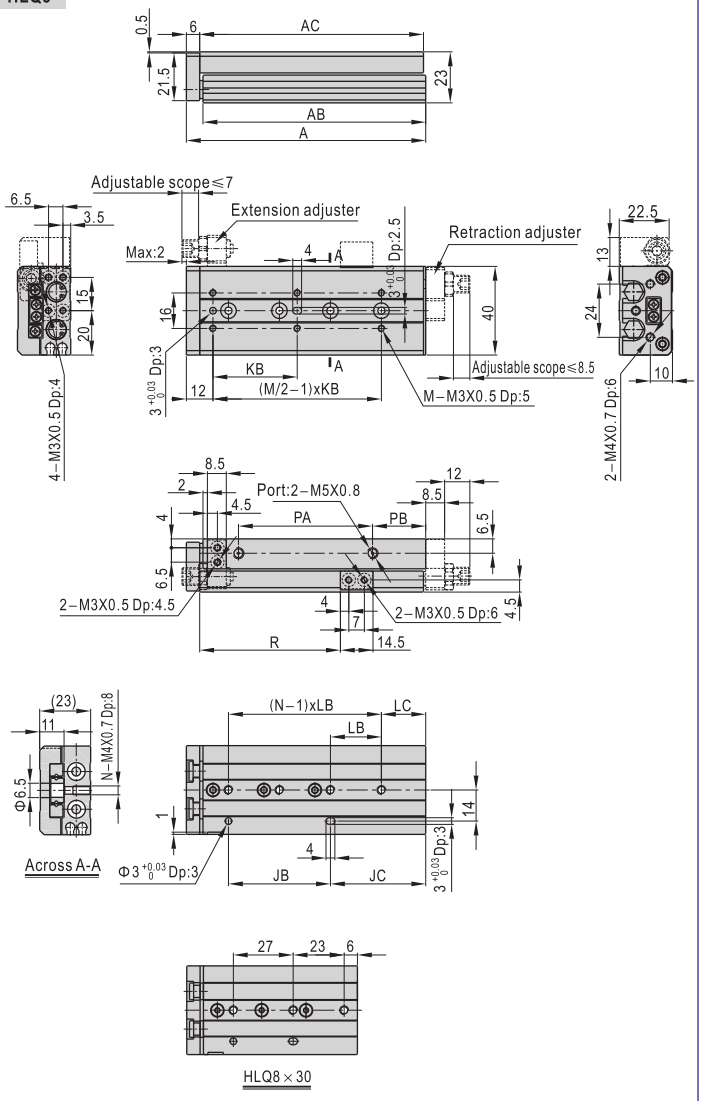

Stroke\Item	A	AB	AC	JB	JC	KB	LB	LC	M	N	PA	PB	R
10	53	45.5	46	19	13	25	25	7	4	2	18	10	23.5
20	63	55.5	56	28	14	25	28	14	4	2	28	10	33.5
30	77	69.5	70	27	29	26	–	–	6	3	42	10	43.5
40	91	83.5	84	31	39	32	31	8	6	3	54	12	53.5
50	116	108.5	109	58	37	46	29	8	6	4	79	12	63.5
75	144	136.5	137	60	61	50	30	31	6	4	107	10	88.5

HLQL8

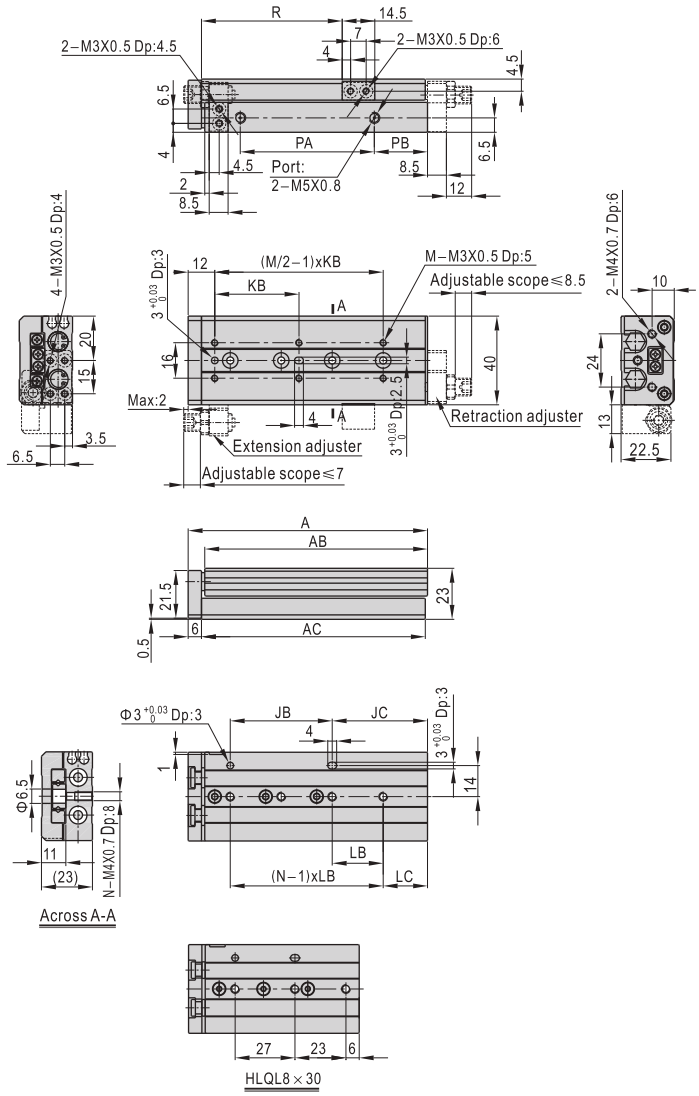

Stroke\Item	A	AB	AC	JB	JC	KB	LB	LC	M	N	PA	PB	R
10	53	45.5	46	19	13	25	25	7	4	2	18	10	23.5
20	63	55.5	56	28	14	25	28	14	4	2	28	10	33.5
30	77	69.5	70	27	29	26	–	–	6	3	42	10	43.5
40	91	83.5	84	31	39	32	31	8	6	3	54	12	53.5
50	116	108.5	109	58	37	46	29	8	6	4	79	12	63.5
75	144	136.5	137	60	61	50	30	31	6	4	107	10	88.5

HLQ8(With shock absorber)

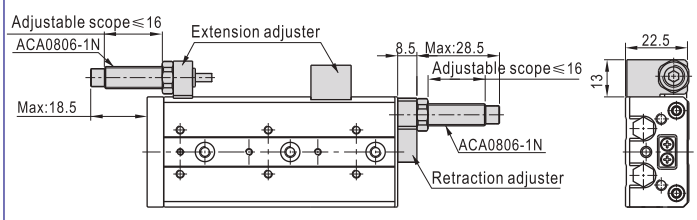

HLQL8(With shock absorber)

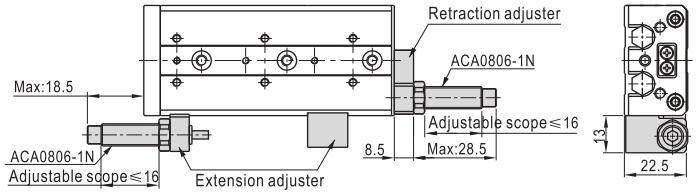

HLQ12

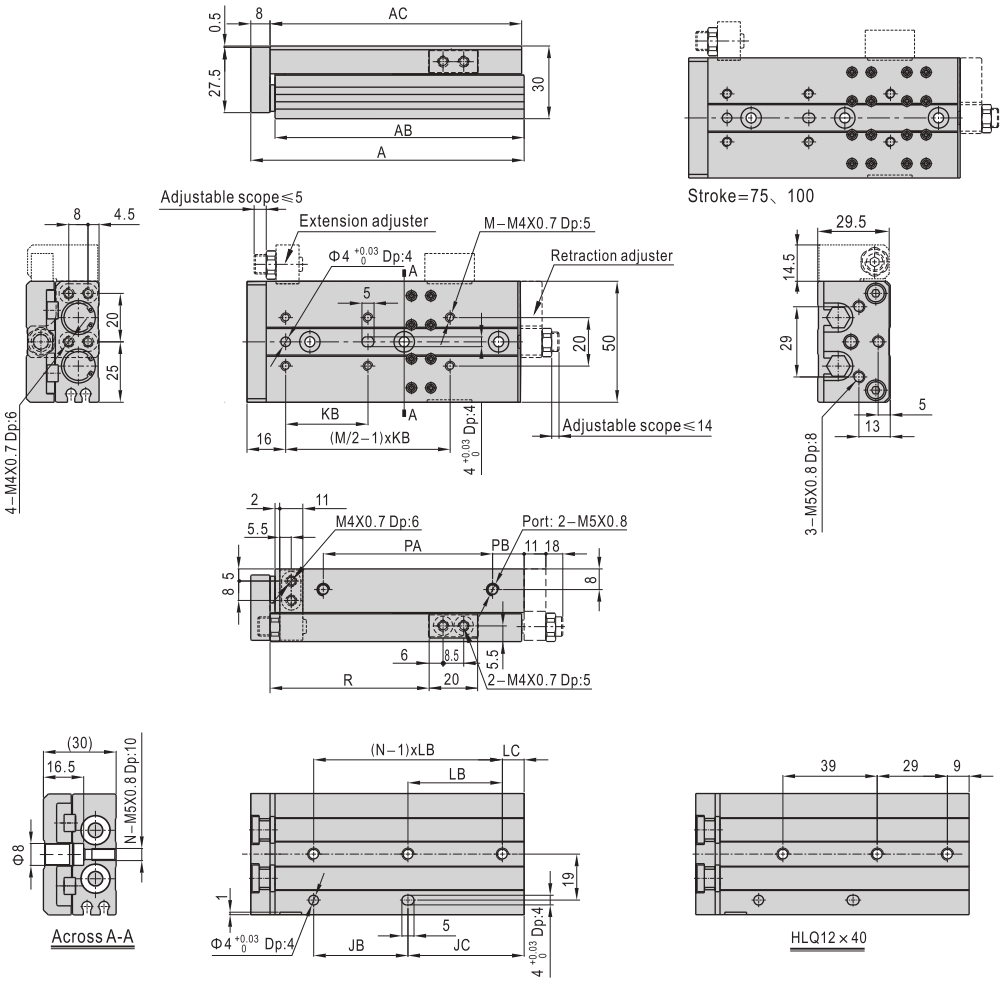

Stroke\Item	A	AB	AC	JB	JC	KB	LB	LC	M	N	PA	PB	R
10	76	66	67	32	18	28	32	18	4	2	32.5	13	35
20	76	66	67	32	18	28	32	18	4	2	32.5	13	45
30	86	76	77	40	20	38	40	20	4	2	42.5	13	55
40	103	93	94	39	38	34	–	–	6	3	59.5	13	65
50	113	103	104	39	48	34	39	9	6	3	69.5	13	75
75	157	147	148	72	59	36	36	23	8	4	113.5	13	99
100	182	172	173	72	84	36	36	12	10	5	134.5	17	124

HLQ12(With shock absorber)

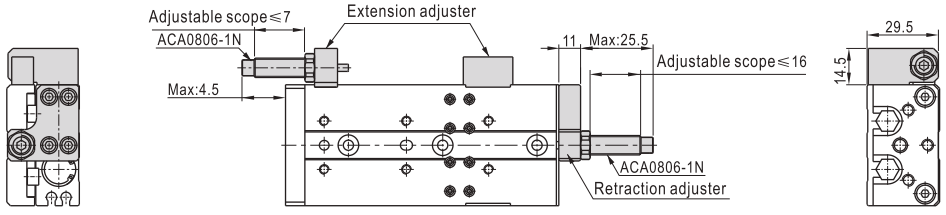

HLQL12

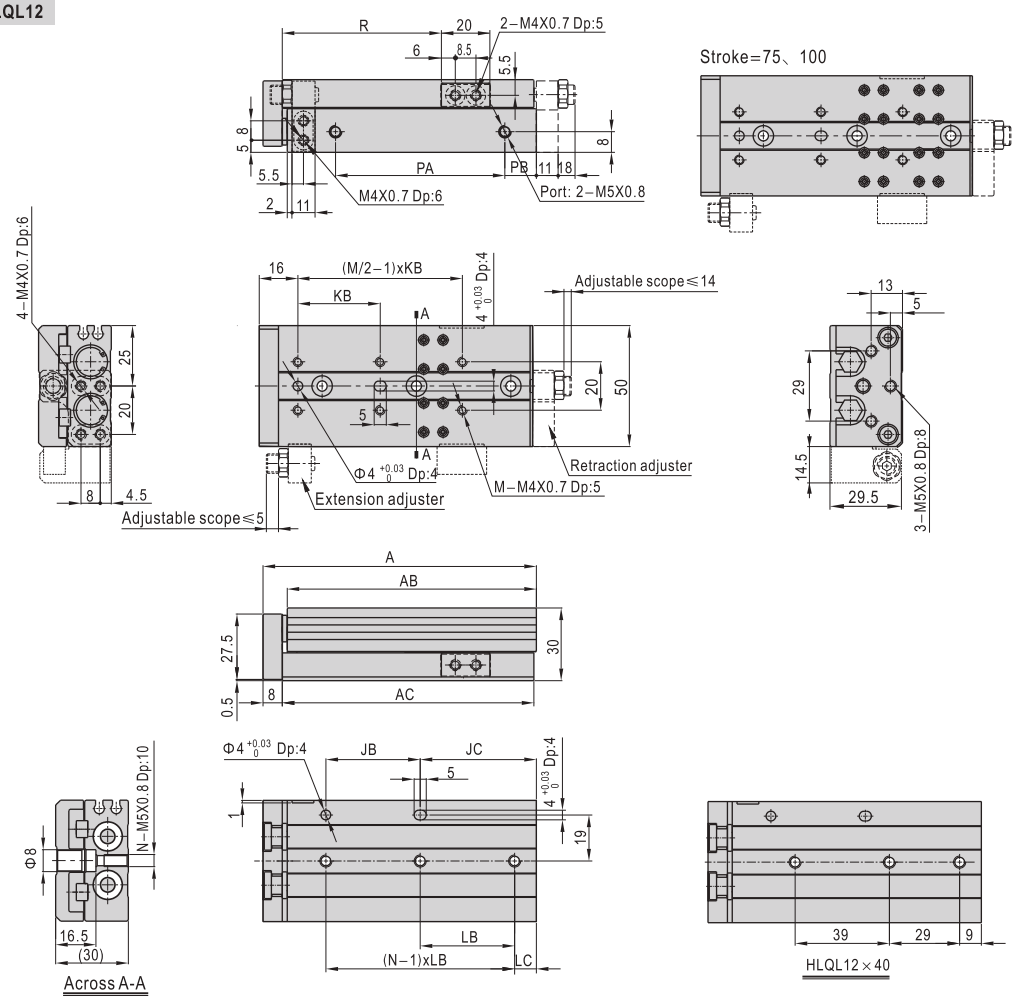

Stroke\Item	A	AB	AC	JB	JC	KB	LB	LC	M	N	PA	PB	R
10	76	66	67	32	18	28	32	18	4	2	32.5	13	35
20	76	66	67	32	18	28	32	18	4	2	32.5	13	45
30	86	76	77	40	20	38	40	20	4	2	42.5	13	55
40	103	93	94	39	38	34	–	–	6	3	59.5	13	65
50	113	103	104	39	48	34	39	9	6	3	69.5	13	75
75	157	147	148	72	59	36	36	23	8	4	113.5	13	99
100	182	172	173	72	84	36	36	12	10	5	134.5	17	124

HLQL12(With shock absorber)

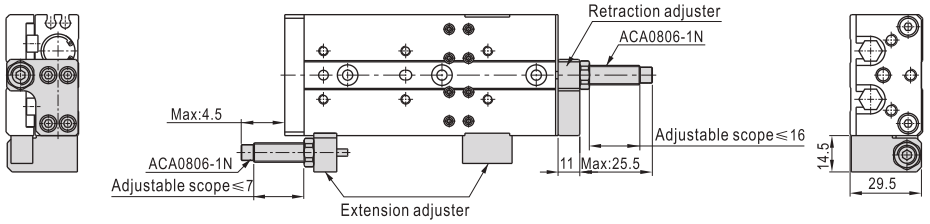

HLQ16

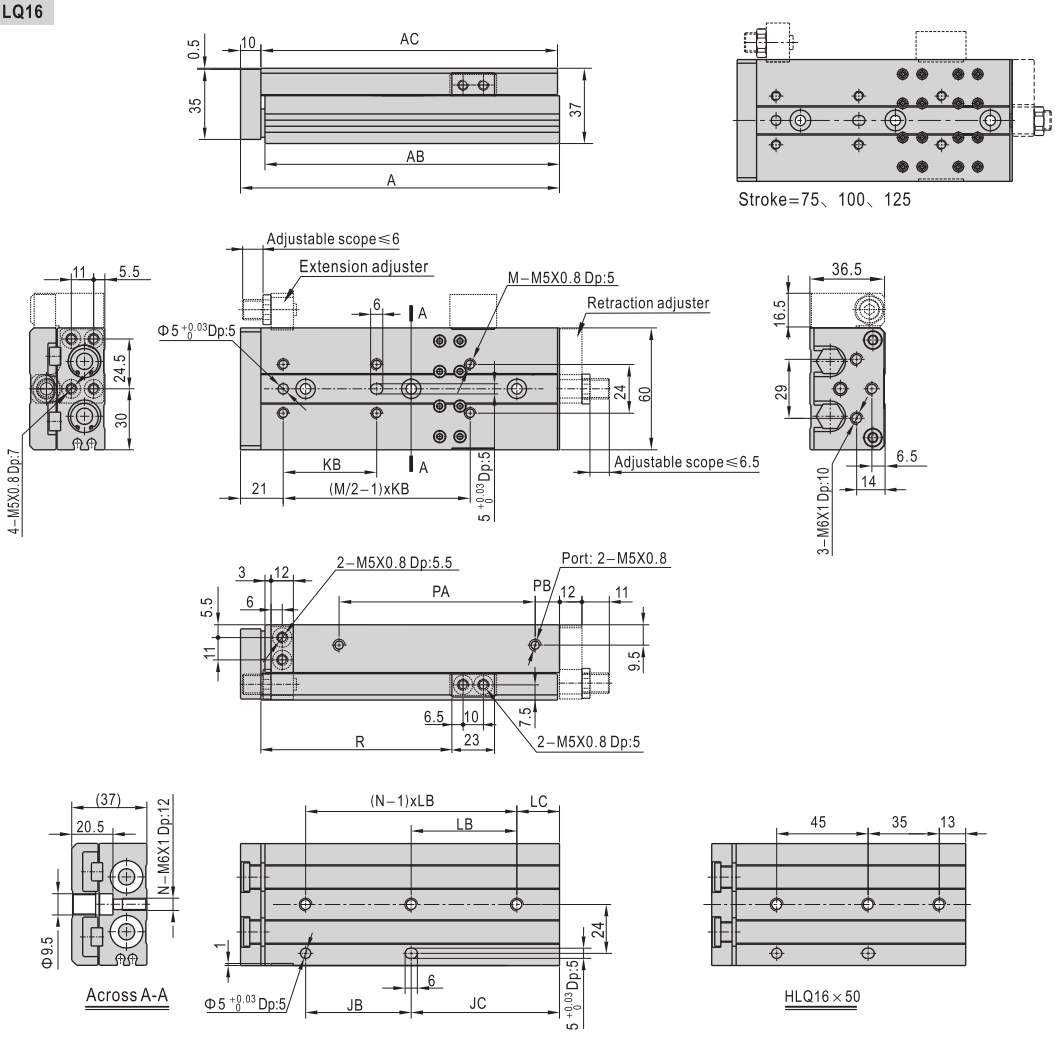

Stroke\Item	A	AB	AC	JB	JC	KB	LB	LC	M	N	PA	PB	R
10	89	77	78	39	18	38	39	18	4	2	40.5	12	28.5
20	89	77	78	39	18	38	39	18	4	2	40.5	12	38.5
30	99	87	88	48	19	48	48	19	4	2	50.5	12	48.5
40	109	97	98	58	19	58	58	19	4	2	60.5	12	58.5
50	125	113	114	45	48	40	–	–	6	3	70.5	18	68.5
75	157	145	146	52	73	46	52	21	6	3	108.5	12	93.5
100	200	188	189	88	80	44	44	36	8	4	151.5	12	118.5
125	225	213	214	88	105	44	44	17	10	5	176.5	12	143.5

HLQ16(With shock absorber)

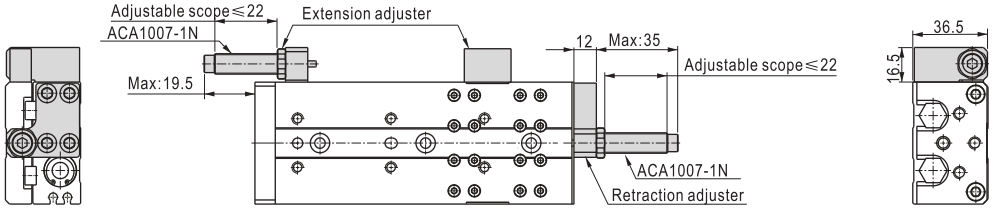

HLQL16

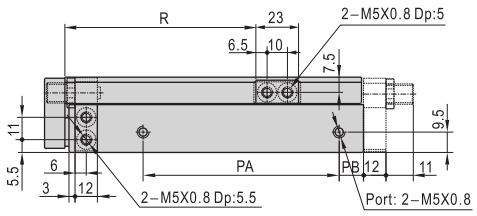

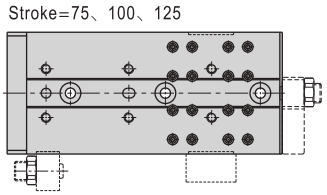

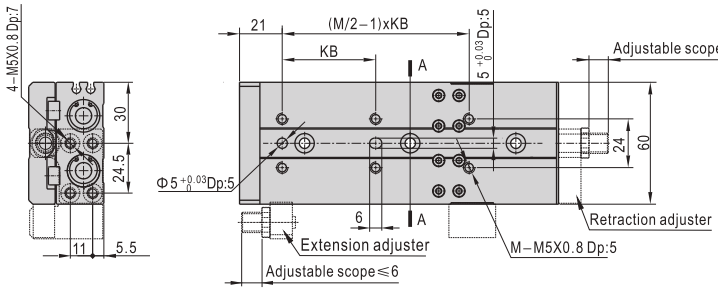

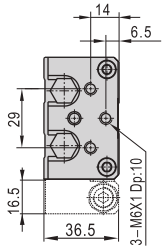

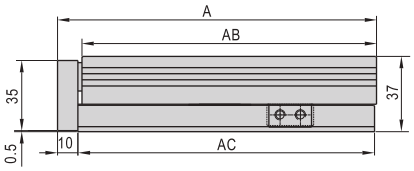

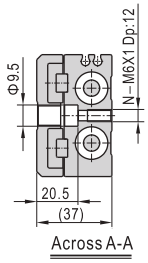

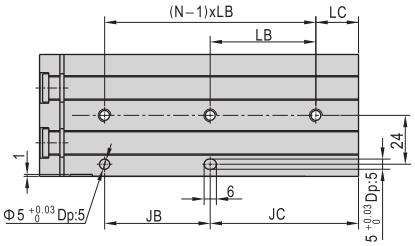

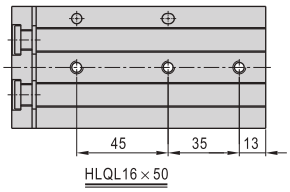

Stroke\Item	A	AB	AC	JB	JC	KB	LB	LC	M	N	PA	PB	R
10	89	77	78	39	18	38	39	18	4	2	40.5	12	28.5
20	89	77	78	39	18	38	39	18	4	2	40.5	12	38.5
30	99	87	88	48	19	48	48	19	4	2	50.5	12	48.5
40	109	97	98	58	19	58	58	19	4	2	60.5	12	58.5
50	125	113	114	45	48	40	–	–	6	3	70.5	18	68.5
75	157	145	146	52	73	46	52	21	6	3	108.5	12	93.5
100	200	188	189	88	80	44	44	36	8	4	151.5	12	118.5
125	225	213	214	88	105	44	44	17	10	5	176.5	12	143.5

HLQL16(With shock absorber)

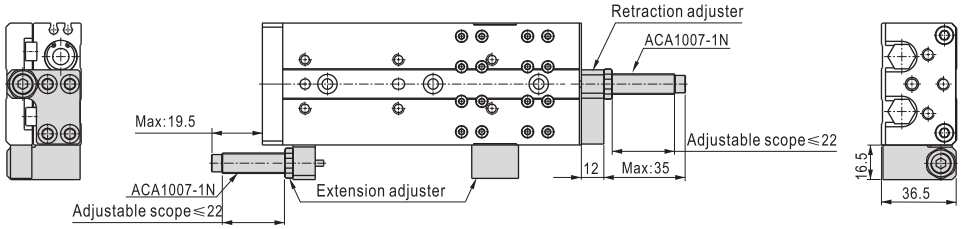

HLQ20

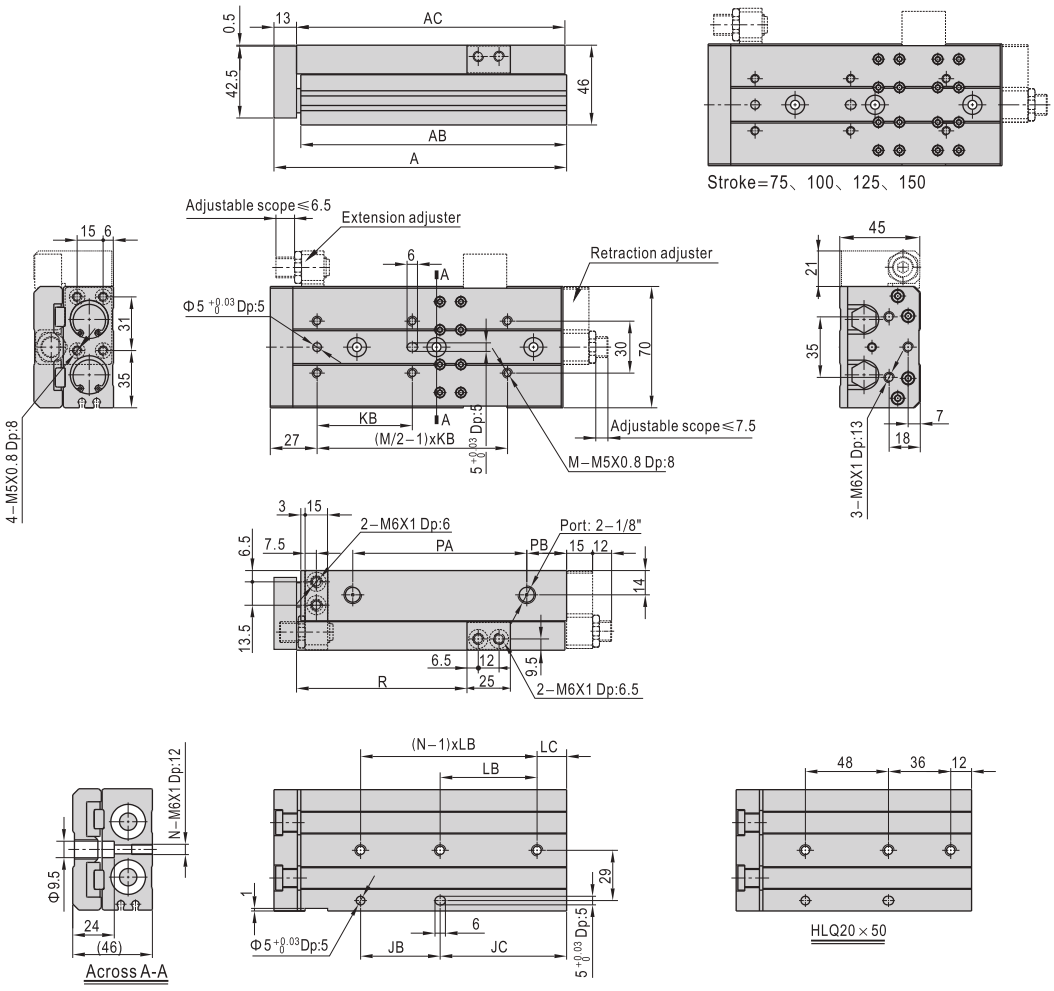

Stroke\Item	A	AB	AC	JB	JC	KB	LB	LC	M	N	PA	PB	R
10	108	92.5	94	50	18	45	46	22	4	2	46.5	16	32.5
20	108	92.5	94	50	18	40	46	22	4	2	46.5	16	42.5
30	108	92.5	94	50	18	48	46	22	4	2	46.5	16	52.5
40	118	102.5	104	56	22	58	56	22	4	2	56.5	16	62.5
50	136	120.5	122	48	48	42	–	–	6	3	72.5	18	72.5
75	169	153.5	155	56	73	55	56	17	6	3	98.5	25	97.5
100	226	210.5	212	112	74	50	56	18	8	4	155.5	25	122.5
125	254	238.5	240	118	96	55	59	37	8	4	183.5	25	147.5
150	282	266.5	268	124	118	62	62	56	8	4	211.5	25	172.5

HLQ20(With shock absorber)

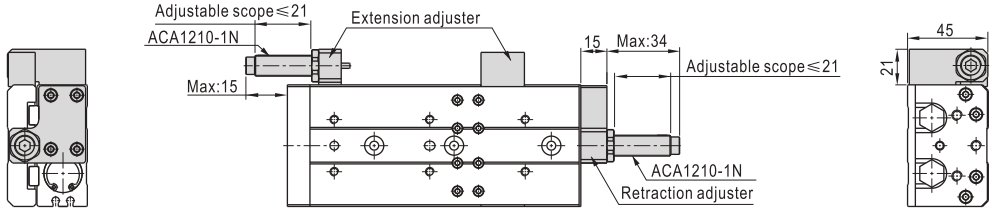

HLQL20

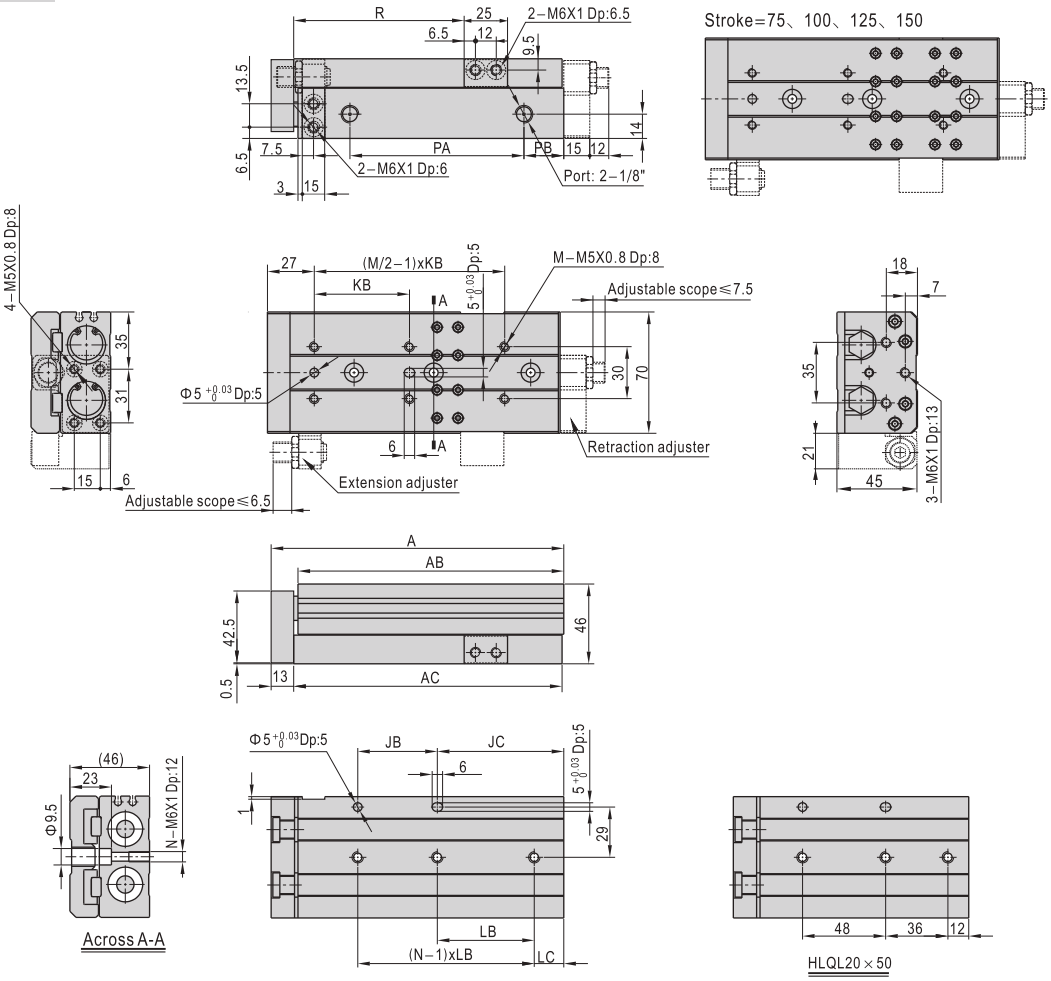

Stroke\Item	A	AB	AC	JB	JC	KB	LB	LC	M	N	PA	PB	R
10	108	92.5	94	50	18	45	46	22	4	2	46.5	16	32.5
20	108	92.5	94	50	18	40	46	22	4	2	46.5	16	42.5
30	108	92.5	94	50	18	48	46	22	4	2	46.5	16	52.5
40	118	102.5	104	56	22	58	56	22	4	2	56.5	16	62.5
50	136	120.5	122	48	48	42	–	–	6	3	72.5	18	72.5
75	169	153.5	155	56	73	55	56	17	6	3	98.5	25	97.5
100	226	210.5	212	112	74	50	56	18	8	4	155.5	25	122.5
125	254	238.5	240	118	96	55	59	37	8	4	183.5	25	147.5
150	282	266.5	268	124	118	62	62	56	8	4	211.5	25	172.5

HLQL20(With shock absorber)

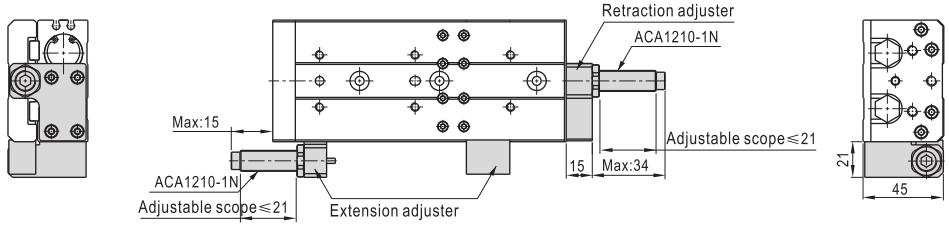

HLQ25

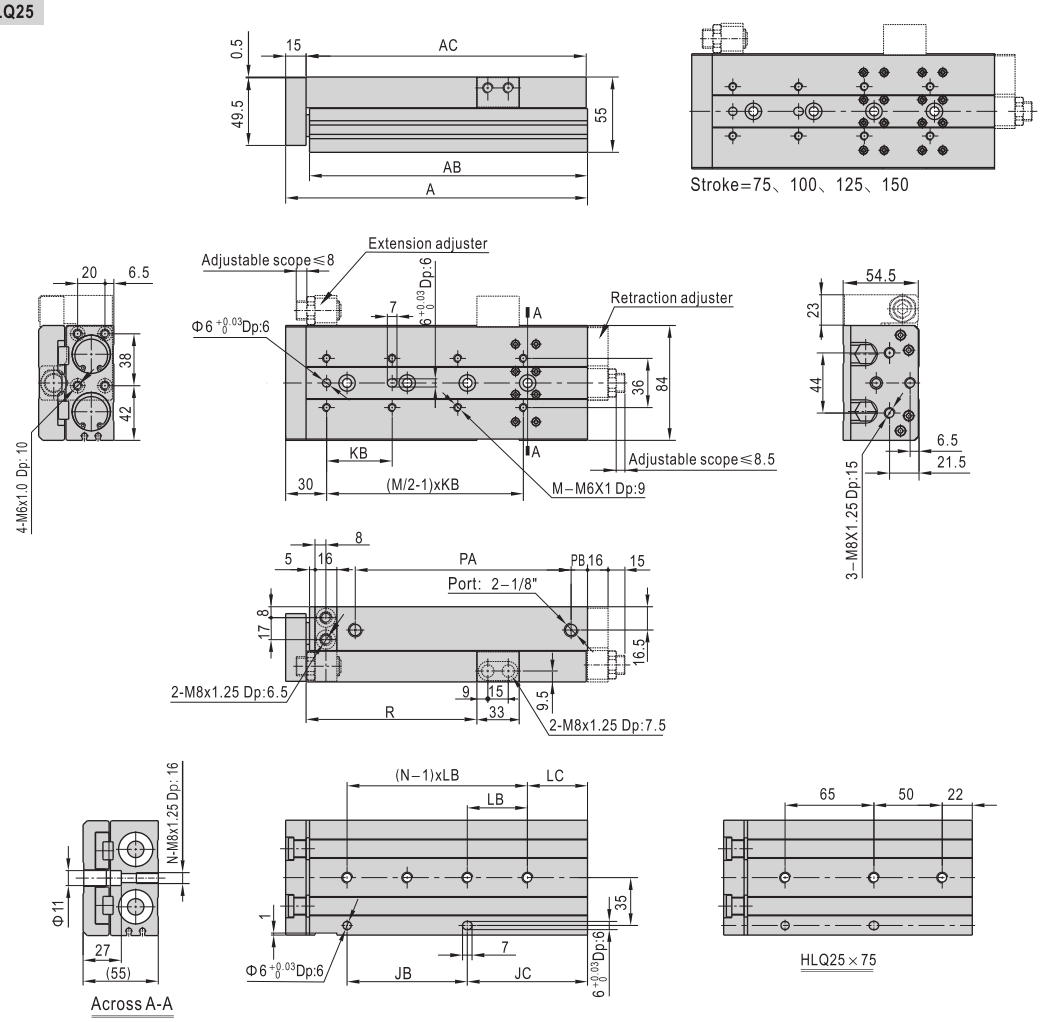

Stroke\Item	A	AB	AC	JB	JC	KB	LB	LC	M	N	PA	PB	R
10	123	105.5	107	55	23	55	55	23	4	2	58	12	35
20	123	105.5	107	55	23	46	55	23	4	2	58	12	45
30	123	105.5	107	55	23	55	55	23	4	2	58	12	55
40	133	115.5	117	65	23	65	65	23	4	2	68	12	65
50	157	139.5	141	80	32	75	80	32	4	2	92	14	75
75	182	164.5	166	65	72	60	–	–	6	3	117	12	100
100	221	203.5	205	88	88	48	44	44	8	4	156	12	125
125	274	256.5	258	132	97	60	66	31	8	4	209	12	150
150	299	281.5	283	132	122	65	66	56	8	4	234	12	175

HLQ25(With shock absorber)

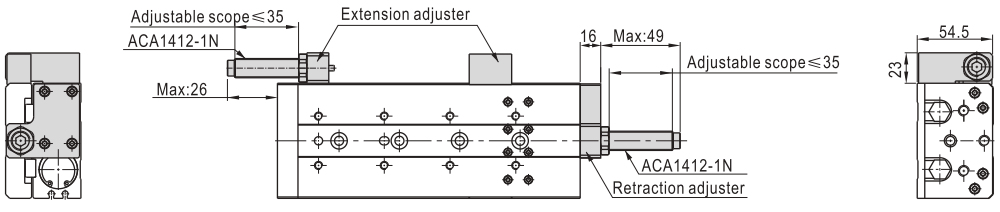

HLQL25

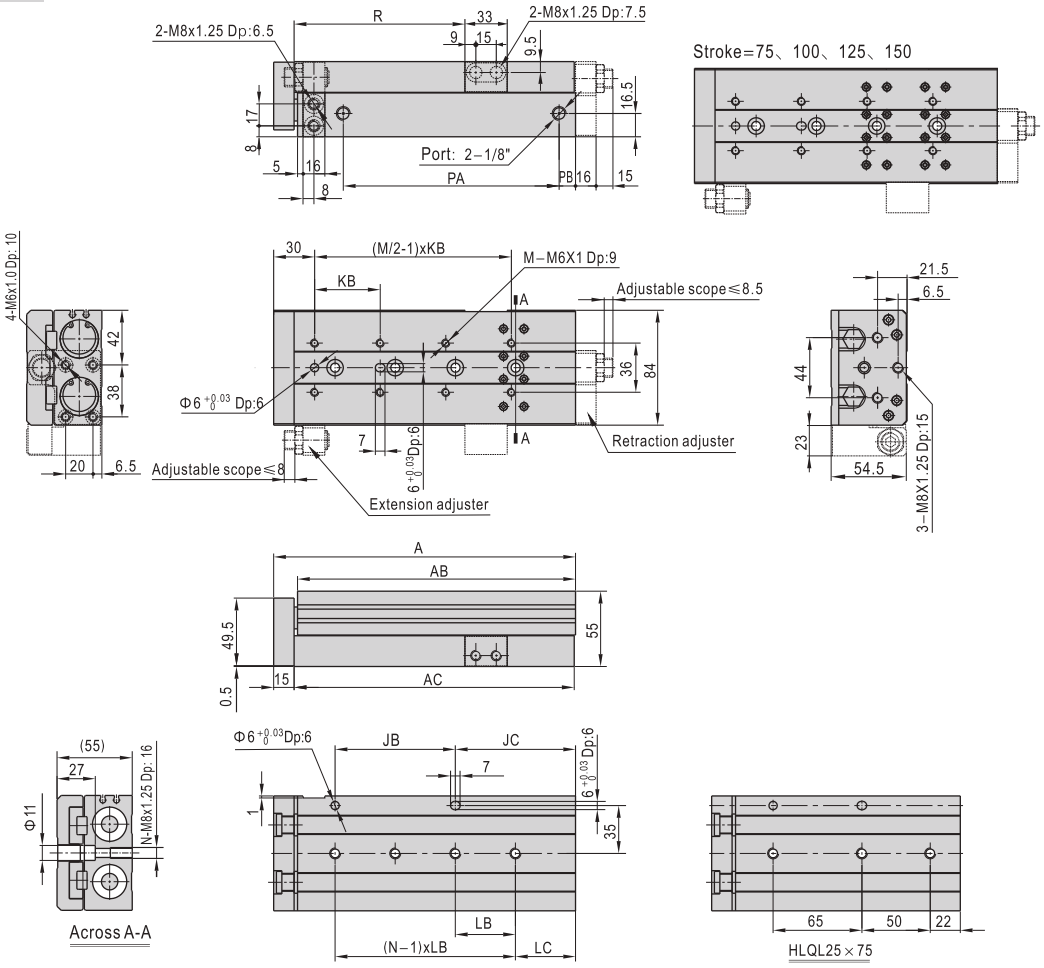

Stroke\Item	A	AB	AC	JB	JC	KB	LB	LC	M	N	PA	PB	R
10	123	105.5	107	55	23	55	55	23	4	2	58	12	35
20	123	105.5	107	55	23	46	55	23	4	2	58	12	45
30	123	105.5	107	55	23	55	55	23	4	2	58	12	55
40	133	115.5	117	65	23	65	65	23	4	2	68	12	65
50	157	139.5	141	80	32	75	80	32	4	2	92	14	75
75	182	164.5	166	65	72	60	–	–	6	3	117	12	100
100	221	203.5	205	88	88	48	44	44	8	4	156	12	125
125	274	256.5	258	132	97	60	66	31	8	4	209	12	150
150	299	281.5	283	132	122	65	66	56	8	4	234	12	175

HLQL25(With shock absorber)

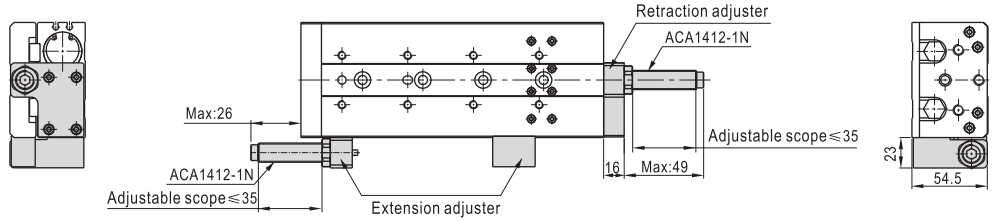

Ordering code

F–HLQ 20 AS

Accessory

Model

HLQ: Standard
HLQL: Symmetrical

Bore size

Accessory type

A: Adjustable rubber stopper(Both ends)
AS: Adjustable rubber stopper(Extention)
AF: Adjustable rubber stopper(Retraction)
B: Shock absorber(Both ends)
BS: Shock absorber(Extention)
BF: Shock absorber(Retraction)

Accessory selection

	Accessories\Bore size		6	8	12
HLQ: Standard	Both ends	A(Adjustable rubber stopper)	F-HLQ6A	F-HLQ8A	F-HLQ12A
		B(Shock absorber)	×	F-HLQ8B	F-HLQ12B
	Extention	AS(Adjustable rubber stopper)	F-HLQ6AS	F-HLQ8AS	F-HLQ12AS
		BS(Shock absorber)	×	F-HLQ8BS	F-HLQ12BS
	Retraction	AF(Adjustable rubber stopper)	F-HLQ6AF	F-HLQ8AF	F-HLQ12AF
		BF(Shock absorber)	×	F-HLQ8BF	F-HLQ12BF

	Accessories\Bore size		16	20	25
HLQ: Standard	Both ends	A(Adjustable rubber stopper)	F-HLQ16A	F-HLQ20A	F-HLQ25A
		B(Shock absorber)	F-HLQ16B	F-HLQ20B	F-HLQ25B
	Extention	AS(Adjustable rubber stopper)	F-HLQ16AS	F-HLQ20AS	F-HLQ25AS
		BS(Shock absorber)	F-HLQ16BS	F-HLQ20BS	F-HLQ25BS
	Retraction	AF(Adjustable rubber stopper)	F-HLQ16AF	F-HLQ20AF	F-HLQ25AF
		BF(Shock absorber)	F-HLQ16BF	F-HLQ20BF	F-HLQ25BF

	Accessories\Bore size		6	8	12
HLQL: Symmetrical	Both ends	A(Adjustable rubber stopper)	F-HLQL6A	F-HLQL8A	F-HLQL12A
		B(Shock absorber)	×	F-HLQL8B	F-HLQL12B
	Extention	AS(Adjustable rubber stopper)	F-HLQ6AS	F-HLQ8AS	F-HLQ12AS
		BS(Shock absorber)	×	F-HLQ8BS	F-HLQ12BS
	Retraction	AF(Adjustable rubber stopper)	F-HLQL6AF	F-HLQL8AF	F-HLQL12AF
		BF(Shock absorber)	×	F-HLQL8BF	F-HLQL12BF

	Accessories\Bore size		16	20	25
HLQL: Symmetrical	Both ends	A(Adjustable rubber stopper)	F-HLQL16A	F-HLQL20A	F-HLQL25A
		B(Shock absorber)	F-HLQL16B	F-HLQL20B	F-HLQL25B
	Extention	AS(Adjustable rubber stopper)	F-HLQ16AS	F-HLQ20AS	F-HLQ25AS
		BS(Shock absorber)	F-HLQ16BS	F-HLQ20BS	F-HLQ25BS
	Retraction	AF(Adjustable rubber stopper)	F-HLQL16AF	F-HLQL20AF	F-HLQL25AF
		BF(Shock absorber)	F-HLQL16BF	F-HLQL20BF	F-HLQL25BF

Note): A=AS+AF; B=BS+BF.

Dimensions

AS: Adjustable rubber stopper(Extention)

Body Mounting

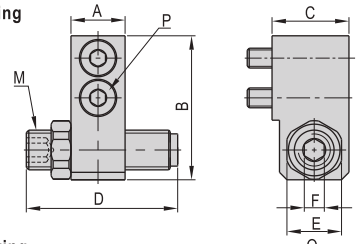

Table Mounting

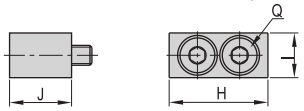

Bore size\Item	Adjusting stroke range	A	B	C	D	E	F
6	5	7	19	10.5	16.5	8	3
8	5	8.5	22	14	21.5	11	4
12	5	11	29	15.5	30.5	11	4
16	5	12	36	17.5	24	14	5
20	5	15	44.5	22	28	17	6
25	5	16	54	24	32	19	6

Bore size\Item	M	P	H	I	J	Q
6	M6 × 1.0	M2.5 length :10	12.5	6.5	10.5	M2.5 length :10
8	M8 × 1.0	M3 length :14	14.5	8	12	M3 length :14
12	M8 × 1.0	M4 length :16	20	9	12.5	M4 length :12
16	M10 × 1.0	M5 length :16	23	10.5	17	M5 length :16
20	M12 × 1.0	M6 length :20	25	12.5	21	M6 length :20
25	M14 × 1.5	M8 length :20	33	16.5	23	M8 length :20

BS: Shock absorber(Extention)

Body Mounting

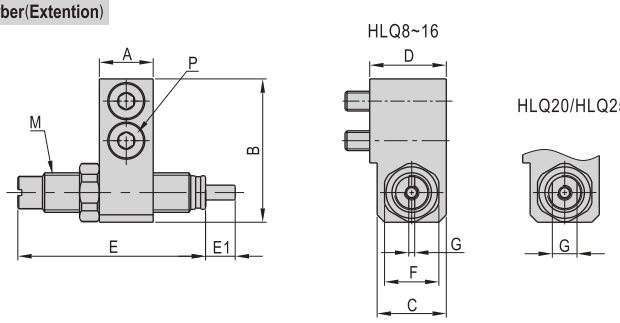

Table Mounting

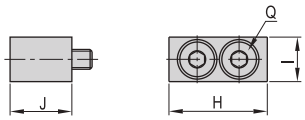

Bore size\Item	A	B	C	D	E	E1	F	G	M	P	H	I	J	Q
8	8.5	22	12.5	14	38	6	11	1.2	M8 × 1.0	M3 length :14	14.5	8	12	M3 length :14
12	11	29	14	15.5	38	6	11	1.2	M8 × 1.0	M4 length :16	20	9	12.5	M4 length :12
16	12	36	16	17.5	48	7	14	1.2	M10 × 1.0	M5 length :16	23	10.5	17	M5 length :16
20	15	44.5	20	22	50	10	17	11	M12 × 1.0	M6 length :20	25	12.5	21	M6 length :20
25	16	54	22	24	66	12	19	12	M14 × 1.5	M8 length :20	33	16.5	23	M8 length :20

AF: Adjustable rubber stopper(Retraction, for standard)

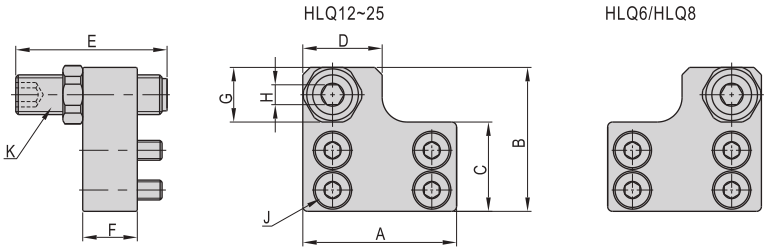

Bore size\Item	Adjusting stroke range	A	B	C	D	E	F	G	H	J	K
6	5	18	19	11	8	21.5	7	8	3	M2.5 length :6	M6 × 1.0
8	5	24	22.2	13	14	21.5	8.5	8	3	M3 length :8	M6 × 1.0
12	5	31	29	18	16	30.5	11	11	4	M4 length :12	M8 × 1.0
16	5	37	36	21.5	18	24	12	14	5	M5 length :12	M10 × 1.0
20	5	45.5	44	25.5	23	28	15	17	6	M5 length :16	M12 × 1.0
25	5	54	53.6	31.6	28	32	16	19	6	M6 length :18	M14 × 1.5

AF: Adjustable rubber stopper(Retraction, for symmetrical)

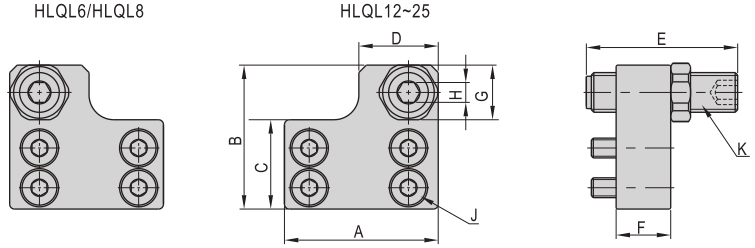

Bore size\Item	Adjusting stroke range	A	B	C	D	E	F	G	H	J	K
6	5	18	19	11	8	21.5	7	8	3	M2.5 length :6	M6 × 1.0
8	5	24	22.2	13	14	21.5	8.5	8	3	M3 length :8	M6 × 1.0
12	5	31	29	18	16	30.5	11	11	4	M4 length :12	M8 × 1.0
16	5	37	36	21.5	18	24	12	14	5	M5 length :12	M10 × 1.0
20	5	45.5	44	25.5	23	28	15	17	6	M5 length :16	M12 × 1.0
25	5	54	53.6	31.6	28	32	16	19	6	M6 length :18	M14 × 1.5

BF: Shock absorber(Retraction, for standard)

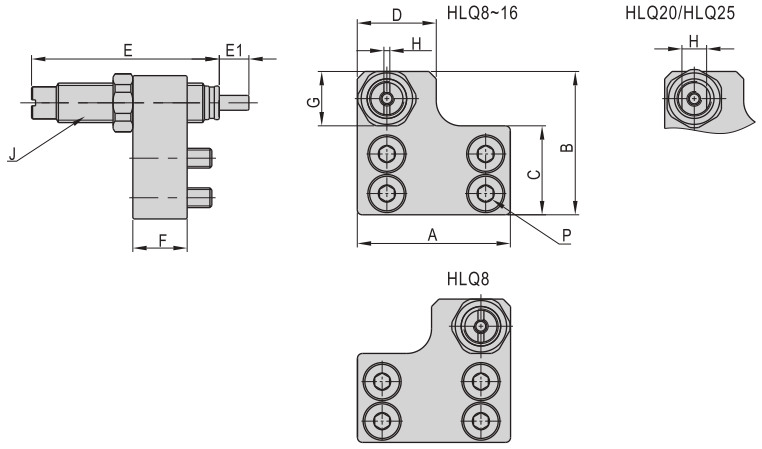

Bore size\Item	A	B	C	D	E	E1	F	G	H	J	P
8	24	23.5	13	14	38	6	8.5	11	1.2	M8 × 1.0	M3 length :8
12	31	29	18	16	38	6	11	11	1.2	M8 × 1.0	M4 length :12
16	37	36	21.5	18	48	7	12	14	1.2	M10 × 1.0	M5 length :12
20	45.5	44	25.5	23	50	10	15	17	11	M12 × 1.0	M5 length :16
25	54	53.6	31.6	28	66	12	16	19	12	M14 × 1.5	M6 length :18

BF: Shock absorber(Retraction, for symmetrical)

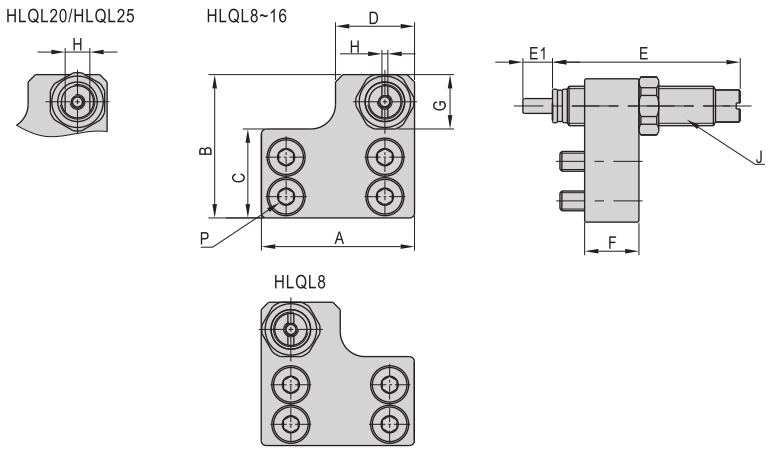

Bore size\Item	A	B	C	D	E	E1	F	G	H	J	P
8	24	23.5	13	14	38	6	8.5	11	1.2	M8 × 1.0	M3 length :8
12	31	29	18	16	38	6	11	11	1.2	M8 × 1.0	M4 length :12
16	37	36	21.5	18	48	7	12	14	1.2	M10 × 1.0	M5 length :12
20	45.5	44	25.5	23	50	10	15	17	11	M12 × 1.0	M5 length :16
25	54	53.6	31.6	28	66	12	16	19	12	M14 × 1.5	M6 length :18

Product series

Series name	Acting type	Bore size	Collocation of sensor switch DS1-H
	Double acting	6 8 12 16 20 25	
Page 284			381

Installation and application

1. Dirty substances in the pipe must be eliminated before cylinder is connected with pipeline to prevent the entrance of impurities into the cylinder.
2. The medium used by cylinder should be filtered to 40 μ m or below .
3. Anti-freezing measure shall be adopted under low temperature environment to prevent moisture freezing.
4. If the cylinder is dismantled and stored for a long time, pay attention to conduct anti-rust treatment to the surface. Anti-dust caps shall be added in air inlet and outlet ports.

Criteria for selection: Cylinder thrust

Unit：Newton(N)

Bore size (mm)	Rod size (mm)	Acting type		Pressure area (mm^2)	Operating pressure(MPa)					
					0.2	0.3	0.4	0.5	0.6	0.7
6	3	Double acting	Push side	42	8	13	17	21	25	29
			Pull side	57	11	17	23	29	34	40
8	4	Double acting	Push side	75	15	23	30	38	45	53
			Pull side	101	20	30	40	51	61	71
12	6	Double acting	Push side	170	34	51	68	85	102	119
			Pull side	226	45	68	90	113	136	158
16	8	Double acting	Push side	302	60	91	121	151	181	211
			Pull side	402	80	121	161	201	241	281
20	10	Double acting	Push side	471	94	141	188	236	283	330
			Pull side	628	126	188	251	314	377	440
25	12	Double acting	Push side	756	151	227	302	378	454	529
			Pull side	982	186	295	393	491	589	687

Specification

Bore size(mm)	6	8	12	16	20	25
Acting type	Double acting					
Fluid	Air(to be filtered by 40 μ m filter element)					
Operating pressure	0.15~0.7MPa(22~100psi)(1.5~7.0bar)					
Proof pressure	1.05MPa(150psi)(10.5bar)					
Temperature ℃	-20~70					
Speed range mm/s	50~500					
Stroke tolerance	$0\sim100^{+1.0}_{0}$ $>100^{+1.5}_{0}$					
Cushion type	Bumper(Both ends), Shock absorber					
Sensor switches ①	DS1−H□N、DS1−H□P					
Port size	M5×0.8					1/8"

① Sensor switch should be ordered additionally, please refer to P381~402 for detail of sensor switch.

Stroke

Bore size (mm)	Standard stroke (mm)	Max. stroke (mm)
6	10 20 30 40 50	50
8	10 20 30 40 50 75	75
12	10 20 30 40 50 75 100	100
16	10 20 30 40 50 75 100 125	125
20	10 20 30 40 50 75 100 125 150	150
25	10 20 30 40 50 75 100 125 150	150

Note) Consult us for non−standard stroke.

Symbol

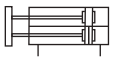

Product feature

1. Roller bearing incorporating the cylinder, it achieves high precision, high rigidity, high load, excellent linearity and non-rotate tolerance. So it can be used in precision assemblage condition.

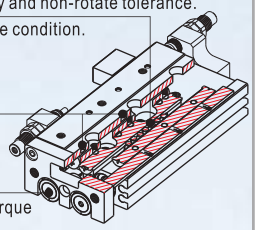

2. Pin holes for positioning improved repeatability of work mounting
3. Floating jointer design
   Piston rod needn't endure additional torque
4. Dual rod, doubles the output thrust

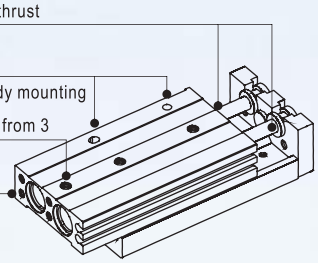

5. Pin holes for positioning
   Improved repeatability of body mounting
6. Body mounting tap Mounting from 3 direction available
7. Two models (HLS/HLSL) are available for choosing due to different designs of sensor slots and flexible cushioning elements.

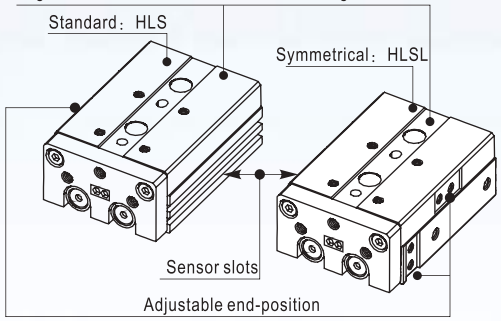

Ordering code

HLS 20×30 S AS G

Model
HLS: Compact slide cylinder (Double acting type)(Roller bearing)
HLSL: Symmetrical Compact slide cylinder (Double acting type)(Roller bearing)

Bore size
6, 8, 12, 16, 20, 25

Stroke
Refer to stroke table for details

Magnet
S: With magnet

Thread type ①
G: G
T: NPT

Adjuster option ②

Blank: Without adjuster(Basic type)

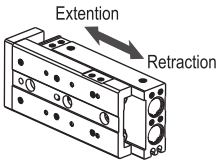

A: Adjustable rubber stopper(Both ends)

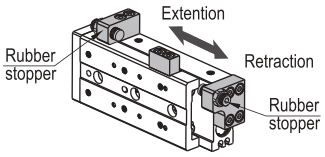

B: Shock absorber(Both ends)

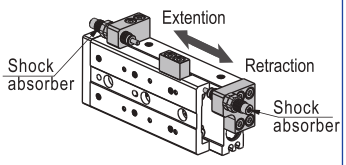

AS: Adjustable rubber stopper(Extention)

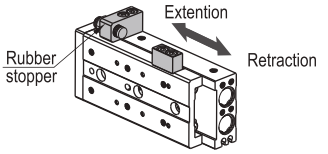

BS: Shock absorber(Extention)

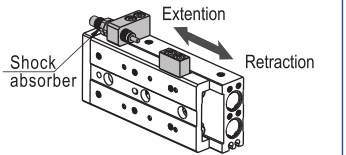

AF: Adjustable rubber stopper(Retraction)

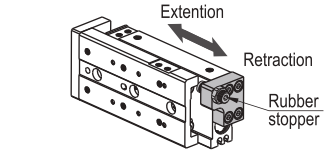

BF: Shock absorber(Retraction)

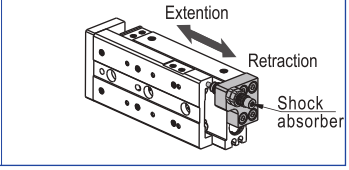

① When the thread is standard, the code is blank.
② B type, BS type, BF type are unavailable for bore size of Φ6.

Model Selection Method

Please select compact cylinder's type according to following procedure, and cross reference with data sheets.

1) Operating conditions(According to mounting position and work form)

1. Model used(Bore size, Stroke)
2. Type of cushion(Bumper, Shock absrober)
3. Mounting position of work(Top, front)
4. Mounting direction(Axial, Vertical)
5. Average speed Va(mm/s)
6. Applied load W(N) **Fig. 1**
7. Overhang L1, L2, L3(mm)

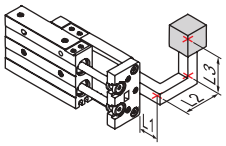

Explain: L1 is the distance of load's center beyond the end plank's plane. If load's center is not beyond the end plank's plane, L1 is negative.

Fig. 1: Applied load

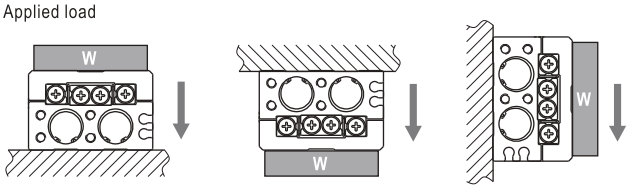

2) Kinetic energy check

Steps

1. Calculate kinetic energy of load E(J)

$$E=\frac{1}{2}\times\frac{W}{g}\times\left(\frac{1.4\times Va}{1000}\right)^2$$

2. Calculate allowable kinetic energy Ea(J)

$$Ea = K \times E_{max}$$

K:Mounting work coefficient (**Fig 2**)

E_{max}:Maximum allowable kinetic energy (**Table 1**)

3. Check that kinetic energy of load doesn't exceed allowable kinetic energy:

$$E \leqslant Ea$$

3) Load check

Steps

1. Calculate allowable applied load Wa (N)

$$Wa = K \times \beta \times W_{max}$$

K:Mounting work coefficient (**Fig 2**)

W_{max}:Maximum allowable applied load(**Table 1**)

β :Applied load coefficient (**Fig 3**)

2. Check that load(W) doesn't exceed allowable applied load(Wa):

$$W \leqslant Wa$$

Fig 2: Mounting work coefficient (K)

Top

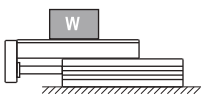

Mounting work coefficient K=1

Front

Mounting work coefficient K=0.6

Fig 3: Applied load coefficient (β)

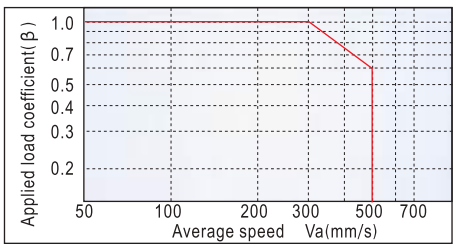

4) Moment check

Steps

Horizontal

1. Calculate actual moment: Mp、Mpo、My、Myo、Mr、Mro (Nm)

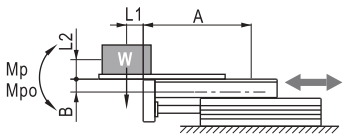

Dynamic moment:
$Mp=W\times(L1+A)/1000$

Static moment:
$Mpo=\frac{W\times(L1+A)}{1000}+\frac{W\times a\times(L2+B)}{1000\times g}$

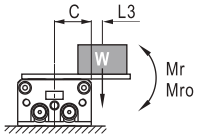

Dynamic moment:
$Mr=W\times(C+L3)/1000$

Static moment:
$Mro=(W\times a\times(C+L3))/1000g$

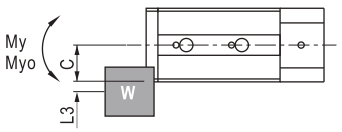

Dynamic moment:
$My=0$

Static moment:
$Myo=(W\times a\times(C+L3))/1000g$

2. Check

Dynamic moment:	$\frac{Mp}{Mp_{max}}+\frac{My}{My_{max}}+\frac{Mr}{Mr_{max}}\leqslant 1$
Static moment:	$\frac{Mpo}{Mpo_{max}}+\frac{Myo}{Myo_{max}}+\frac{Mro}{Mro_{max}}\leqslant 1$

Vertical

1. Calculate actual moment: Mp、Mpo、My、Myo(Nm)

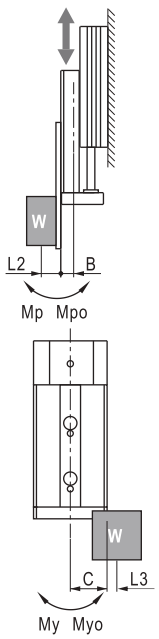

Dynamic moment:
$Mp=W\times(L2+B)/1000$

Static moment:
$Mpo=\frac{W\times(L2+B)}{1000}+\frac{W\times a\times(L2+B)}{1000\times g}$

Dynamic moment:
$My=W\times(C+L3)/1000$

Static moment:
$Myo=\frac{W\times a\times(C+L3)}{1000g}+\frac{W\times(C+L3)}{1000}$

2. Check

Dynamic moment:	$\frac{Mp}{Mp_{max}}+\frac{My}{My_{max}}\leqslant 1$
Static moment:	$\frac{Mpo}{Mpo_{max}}+\frac{Myo}{Myo_{max}}\leqslant 1$

Explain:
L1, L2, L3: The distance of load center to mount plane(Determined by actuality).
A, B, C: Correction value for center position distance of moment(Refer to table 2).
Mp_{max}, My_{max}, Mr_{max}, Mpo_{max}, Myo_{max}, Mro_{max}: Maximum allowable moment(Refer to table 2).
g: Acceleration of gravity($g=9.81m/s^2$).
a: Acceleration of inertia
(Bumper: $a=1600\times(Va/1000)^2$, Shock absorber: $a=400\times(Va/1000)^2$)
W: Load weight(Determined by actuality).

HLS

Note: Symbol and unit

Symbol	Item	Unit
A, B, C	Correction value for center position distance of moment	mm
a	Acceleration of inertia	–
E	Kinetic energy	J
Ea	Allowable kinetic energy	J
Emax	Maximum allowable kinetic energy	J
g	Acceleration of gravity g=9.81	m/s^2
K	Mounting work coefficient	–
L1, L2, L3	Overhang	mm
Mp, My, Mr	Dynamic moment(Pitch、Yaw、Roll)	Nm
Mp_{max}, My_{max}, Mr_{max}	Maximum allowable dynamic moment(Pitch、Yaw、Roll)	Nm
Mpo, Myo, Mro	Static moment(Pitch、Yaw、Roll)	Nm
Mpo_{max}, Myo_{max}, Mro_{max}	Maximum allowable static moment(Pitch、Yaw、Roll)	Nm
Va	Average speed	mm/s
W	Applied load	N
Wmax	Maximum allowable applied load	N
β	Applied load coefficient	-

Table 1: Maximum allowable kinetic energy(Emax), Maximum allowable applied load(Wmax)

Model	Max. allowable kinetic energy Emax(J)			Max. allowable
	Basic type	Rubber stopper type	Shock absorber type	
HLS6	0.01	0.01	–	4
HLS8	0.024	0.024	0.048	8
HLS12	0.05	0.05	0.1	15
HLS16	0.1	0.1	0.2	30
HLS20	0.13	0.13	0.26	40
HLS25	0.22	0.22	0.44	70

Table 2: Maximum allowable moment(Nm), Correction value for center position distance of moment(mm)

Bore size	Stroke	Static moment			Dynamic moment			Correction value		
		Mpo_{max}	Myo_{max}	Mro_{max}	Mp_{max}	My_{max}	Mr_{max}	A	B	C
6	10	3.3	3.8	2.6	0.7	0.7	0.6	27	7.3	16
	20	3.3	3.8	2.6	0.7	0.8	0.6	42		
	30	3.3	3.8	2.6	0.7	0.8	0.6	52		
	40	7.2	7.9	3.6	1.3	1.3	0.6	72		
	50	12.4	12.7	4.7	1.8	1.8	0.6	87		
8	10	10.1	9.1	8.8	2.5	2.5	2.0	32	8.5	20
	20	10.1	9.1	8.8	2.6	2.6	2.0	42		
	30	10.1	9.1	8.8	2.8	2.8	2.0	57		
	40	12.4	10.8	10.1	3.4	3.4	2.3	72		
	50	23.6	24.8	13.9	4.4	4.4	2.1	92		
	75	32.8	35.3	16.4	4.6	4.6	1.8	132		
12	10	33.0	34.3	30.9	7.3	7.3	5.8	48	10	25
	20	33.0	34.3	30.9	7.6	7.6	5.8	58		
	30	33.0	34.3	30.9	7.8	7.8	5.8	68		
	40	33.0	34.3	30.9	8.0	8.0	5.8	78		
	50	53.4	49.6	39.7	9.8	9.8	5.8	88		
	75	78.8	71.9	48.6	14.2	14.2	6.8	125		
	100	78.8	71.9	48.6	14.7	14.7	6.8	160		
16	10	33.0	34.3	30.9	8.8	8.8	7.6	43	11	30
	20	33.0	34.3	30.9	9.2	9.2	7.6	53		
	30	33.0	34.3	30.9	9.5	9.5	7.6	63		
	40	33.0	34.3	30.9	10.0	10.0	7.6	78		
	50	53.4	49.6	39.7	12.2	12.2	7.6	93		
	75	78.8	71.9	48.6	17.6	17.6	8.9	130		
	100	78.8	71.9	48.6	18.2	18.2	8.9	165		
	125	143.7	144.5	53.3	24.8	24.8	7.8	204		
20	10	60.1	50.5	72.8	14.5	14.5	15.2	47	16.5	35
	20	60.1	50.5	72.8	15.2	15.2	15.2	57		
	30	60.1	50.5	72.8	15.7	15.7	15.2	67		
	40	60.1	50.5	72.8	16.3	16.3	15.2	82		
	50	60.1	50.5	72.8	16.6	16.6	15.2	92		
	75	169.3	154.3	114.4	41.2	41.2	22.0	136		
	100	169.3	154.3	114.4	42.8	42.8	22.0	176		
	125	169.3	154.3	114.4	43.6	43.6	22.0	205		
	150	267.5	286.6	145.6	49.0	49.0	20.5	249		
25	10	60.1	50.5	72.8	16.3	16.3	17.6	52	20.3	42
	20	60.1	50.5	72.8	17.0	17.0	17.6	62		
	30	60.1	50.5	72.8	17.4	17.4	17.6	72		
	40	60.1	50.5	72.8	17.8	17.8	17.6	82		
	50	60.1	50.5	72.8	18.2	18.2	17.6	96		
	75	169.3	154.3	114.4	45.2	45.2	25.3	141		
	100	169.3	154.3	114.4	46.2	46.2	25.3	165		
	125	169.3	154.3	114.4	48.0	48.0	25.3	210		
	150	267.5	286.6	145.6	65.0	65.0	28.3	254		

Inner structure

Basic type

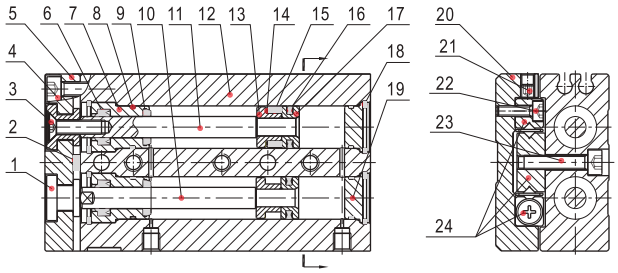

NO.	Item	Material	NO.	Item	Material
1	Floating joint	Carbon steel	13	Magnet holder	Brass
2	Bumper	TPU	14	Magnet washer	NBR
3	Screw	Carbon steel	15	Magnet	Sintered metal (Neodymium-iron-boron)
4	Screw	Carbon steel	16	Piston seal	NBR
5	Fixing plate	Aluminum alloy	17	Piston	Brass
6	Rod seal	NBR	18	C clip	Spring steel
7	Front cover	Aluminum alloy	19	Back cover	Aluminum alloy
8	O–ring	NBR	20	Slide table	Aluminum alloy
9	Bumper	TPU	21	Nut	Carbon steel
10	Piston rod A	Carbon steel	22	Screw	Carbon steel
11	Piston rod B	Stainless steel	23	Screw	Carbon steel
12	Body	Aluminum alloy	24	Slide guide combination	subassembly

Installation and application

1. How to mount cylinder:

1.1) Cylinder can to be mounted from 3 directions

Vertical Mounting(Body thread holes)

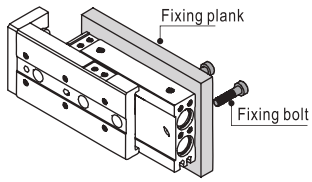

Axial Mounting(Body thread holes)

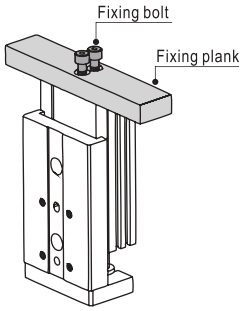

Vertical Mounting(Body through holes)

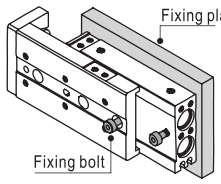

1.2) When mounting an compact slide cylinder, screws of appropriate length should be used and tightened properly within the maximum tightening torque. If screws are tightened beyond designed limits, malfunction may occur. If they are tightened insufficiently, it may result in sliding of falling off from its position.

Vertical Mounting(Body thread holes)

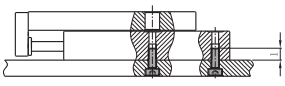

Model	Bolt used	Max. tightening torque (Nm)	Max. screw–in depth(mm)
HLS6	M4 × 0.7	2.1	8.0
HLS8	M4 × 0.7	2.1	8.0
HLS12	M5 × 0.8	4.4	10.0
HLS16	M6 × 1.0	4.4	10.0
HLS20	M6 × 1.0	7.4	12.0
HLS25	M8 × 1.25	18.0	16.0

Vertical Mounting(Body through holes)

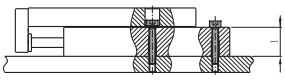

Model	Bolt used	Max. tightening torque (Nm)	Body depth L (mm)
HLS6	M3 × 0.5	1.2	11.0
HLS8	M3 × 0.5	1.2	12.5
HLS12	M4 × 0.7	2.8	18.0
HLS16	M5 × 0.8	5.7	25.0
HLS20	M5 × 0.8	5.7	28.0
HLS25	M6 × 1.0	10.0	36.2

Axial Mounting(Body thread holes)

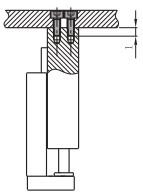

Model	Bolt used	Max. tightening torque (Nm)	Max. screw–in depth(mm)
HLS6	M2.5 × 0.45	0.5	3.5
HLS8	M3 × 0.5	0.9	4.0
HLS12	M4 × 0.7	2.1	6.0
HLS16	M5 × 0.8	4.4	7.0
HLS20	M5 × 0.8	4.4	8.0
HLS25	M6 × 1.0	7.4	10.0

2. Work Piece Mounting:

2.1) Work pieces can be mounted on 2 surfaces of the compact slide.

Front Mounting

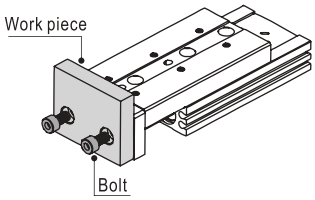

Top Mounting

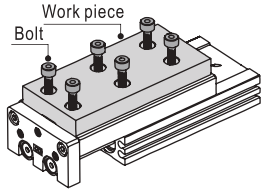

2.2) When mounting a work piece, tighten the bolts properly at a torque value within the limiting range. Use blots at least 0.5mm shorter than maximum thread depth to prevent bolts from contacting the guide block. If the bolts are too long, they hit the guide block and cause damage.

Front Mounting

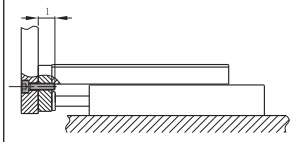

Model	Bolt used	Max. tightening torque (Nm)	Max. screw–in depth(mm)
HLQS	M3 × 0.4	0.9	5.0
HLS8	M4 × 0.7	2.1	6.0
HLS12	M5 × 0.8	4.4	8.0
HLS16	M6 × 1.0	7.4	10.0
HLS20	M6 × 1.0	7.4	13.0
HLS25	M8 × 1.25	18.0	15.0

Top Mounting

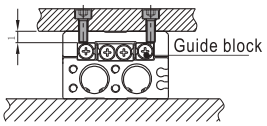

Model	Bolt used	Max. tightening torque (Nm)	Max. screw–in depth(mm)
HLS6	M3 × 0.5	0.9	4.0
HLS8	M3 × 0.5	0.9	5.0
HLS12	M4 × 0.7	2.1	5.5
HLS16	M5 × 0.8	4.4	6.0
HLS20	M5 × 0.8	4.4	10.0
HLS25	M6 × 1.0	7.4	13.0

2.3) Since the table is supported by the linear guide, take care not to apply strong impact or large moment to the guide section.

2.4) Hold the slide when fastening work pieces to it with bolts, If the body is held while tightening bolts, excessive moment may damage guide section.

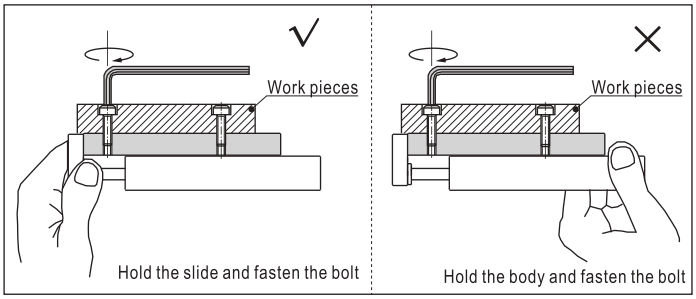

3. About shock absorber:

3.1) Shock absorbers are expendable parts. Promptly replace them when energy absorbing capacity decreases.

3.2) Never turn or adjust the screws on bottom of the shock absorber body. The screws are not for adjusting. Otherwise would cause oil leakage.

3.3) Follow the table for tightening torque of shock absorber to lock nuts.

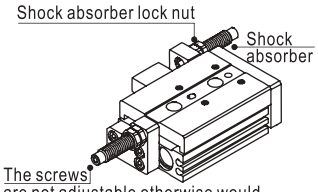

Model	Shock absorber	Tightening torque
HLS6	Without shock absorber	
HLS8	ACA0806-1N	1.67(Nm)
HLS12	ACA0806-1N	1.67(Nm)
HLS16	ACA1007-1N	3.14(Nm)
HLS20	ACA1210-1N	3.14(Nm)
HLS25	ACA1412-1N	10.8(Nm)

4. How to mount sensor switch:

4.1) HLS Series are all with magnet. The matching sensor switches are DS1–H, DS1–HL series. Please refer to page 381~402 for details.

4.2) Maintain a minimum spacing of at least 3mm if two compact cylinders are used side by side in order to avoid malfunction.

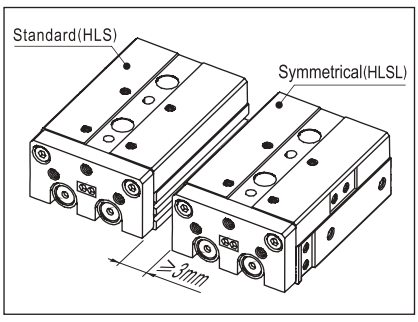

5. Make sure to connect the compact cylinder to speed controller at the meter–out side, and the speed of compact cylinder must below 500mm/s.

6. Don't apply a load beyond the range of the operation limits. Different load or torque will cause different deflection to table, please see below for details.

HLS

6.1) Table deflection due to pitch moment:
Table deflection (arrow) when a load acts upon the section marked with the arrow at the full stroke of the compact slide.

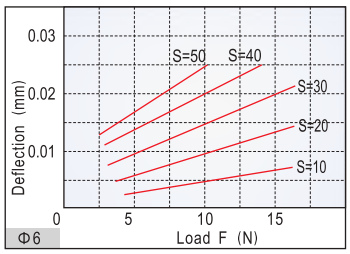

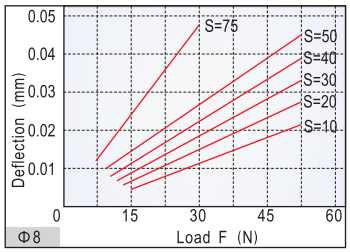

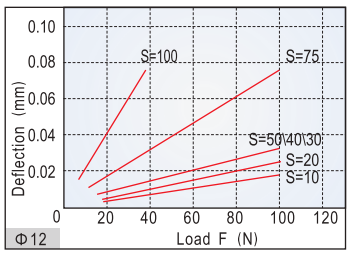

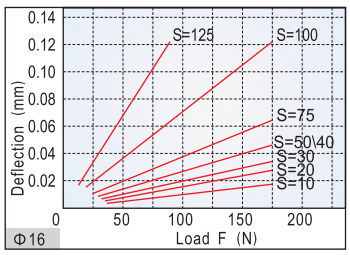

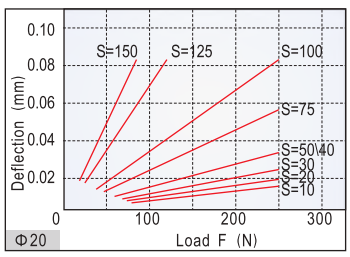

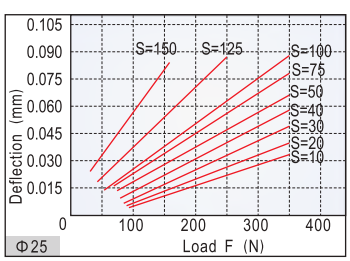

6.2) Table deflection due to yaw moment:
Table deflection (arrow) when a load acts upon the section marked with the arrow at the full stroke of the compact slide.

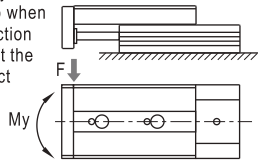

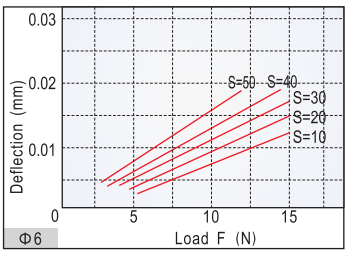

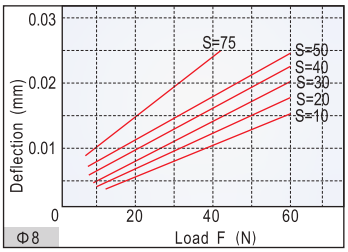

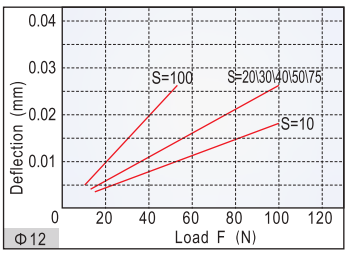

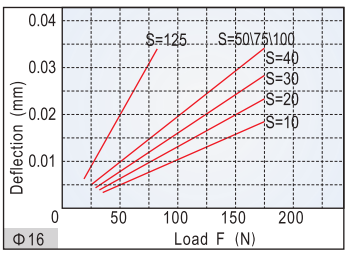

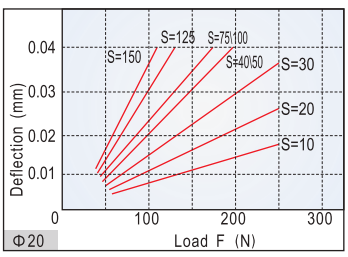

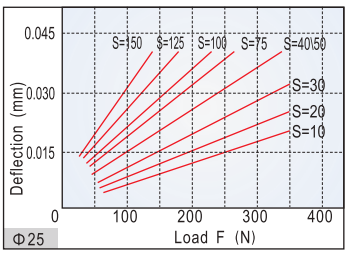

6.3) Table deflection due to roll moment:
Table deflect at A when a load acts upon section F at the full stroke of the compact slide.

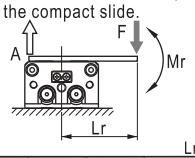

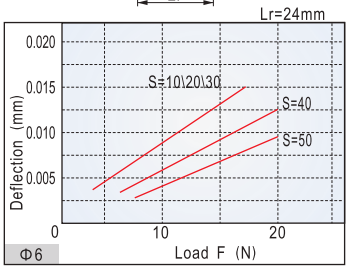

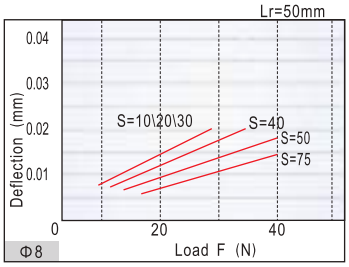

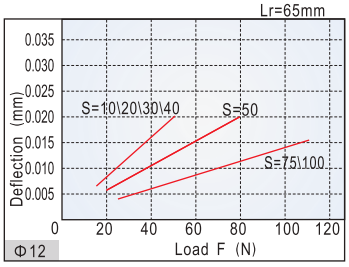

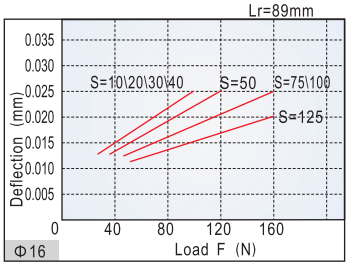

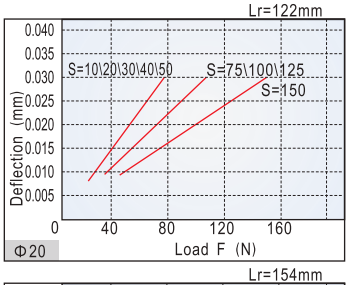

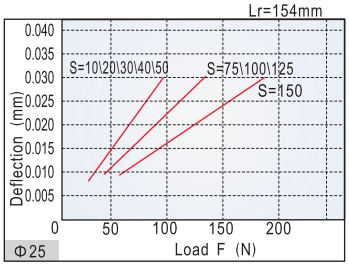

Dimensions

HLS6

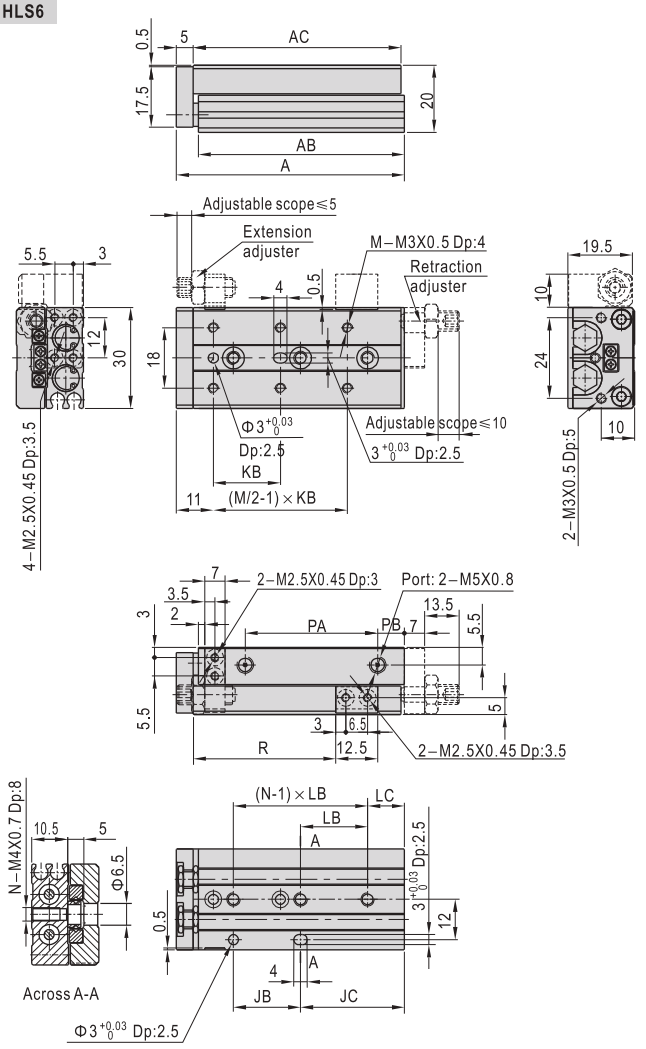

Stroke\Item	A	AB	AC	JB	JC	KB	LB	LC	M	N	PA	PB	R
10	48	41.5	42	20	11	20	25	6	4	2	19	8	21.5
20	58	51.5	52	20	21	30	35	6	4	2	28	9	31.5
30	68	61.5	62	20	31	20	20	11	6	3	39	8	41.5
40	90	83.5	84	30	43	28	30	13	6	3	51	18	51.5
50	106	99.5	100	48	41	38	24	17	6	4	61	24	61.5

HLSL6

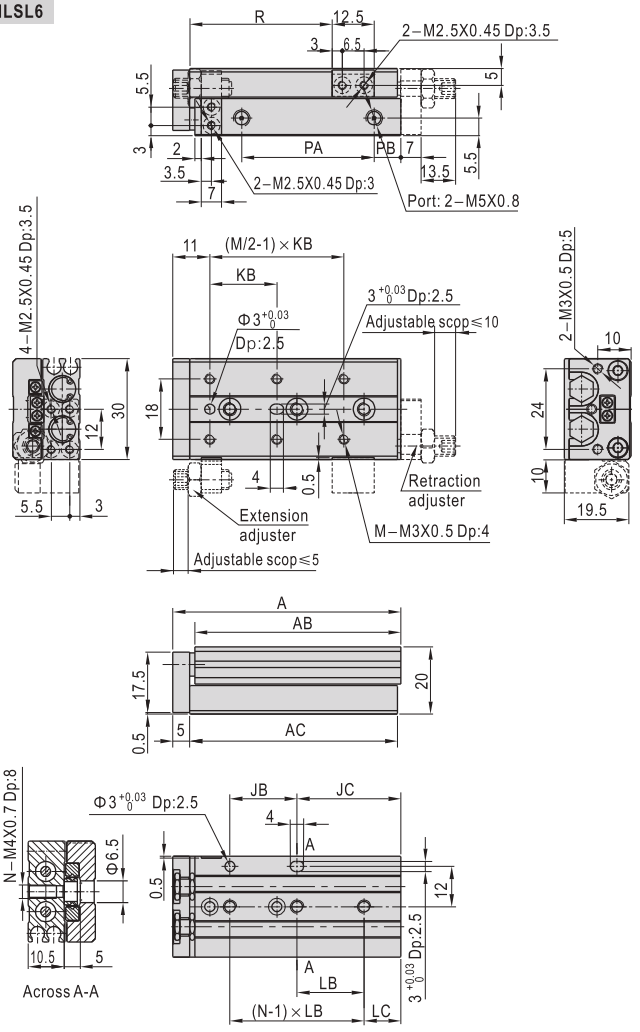

Stroke\Item	A	AB	AC	JB	JC	KB	LB	LC	M	N	PA	PB	R
10	48	41.5	42	20	11	20	25	6	4	2	19	8	21.5
20	58	51.5	52	20	21	30	35	6	4	2	28	9	31.5
30	68	61.5	62	20	31	20	20	11	6	3	39	8	41.5
40	90	83.5	84	30	43	28	30	13	6	3	51	18	51.5
50	106	99.5	100	48	41	38	24	17	6	4	61	24	61.5

HLS8

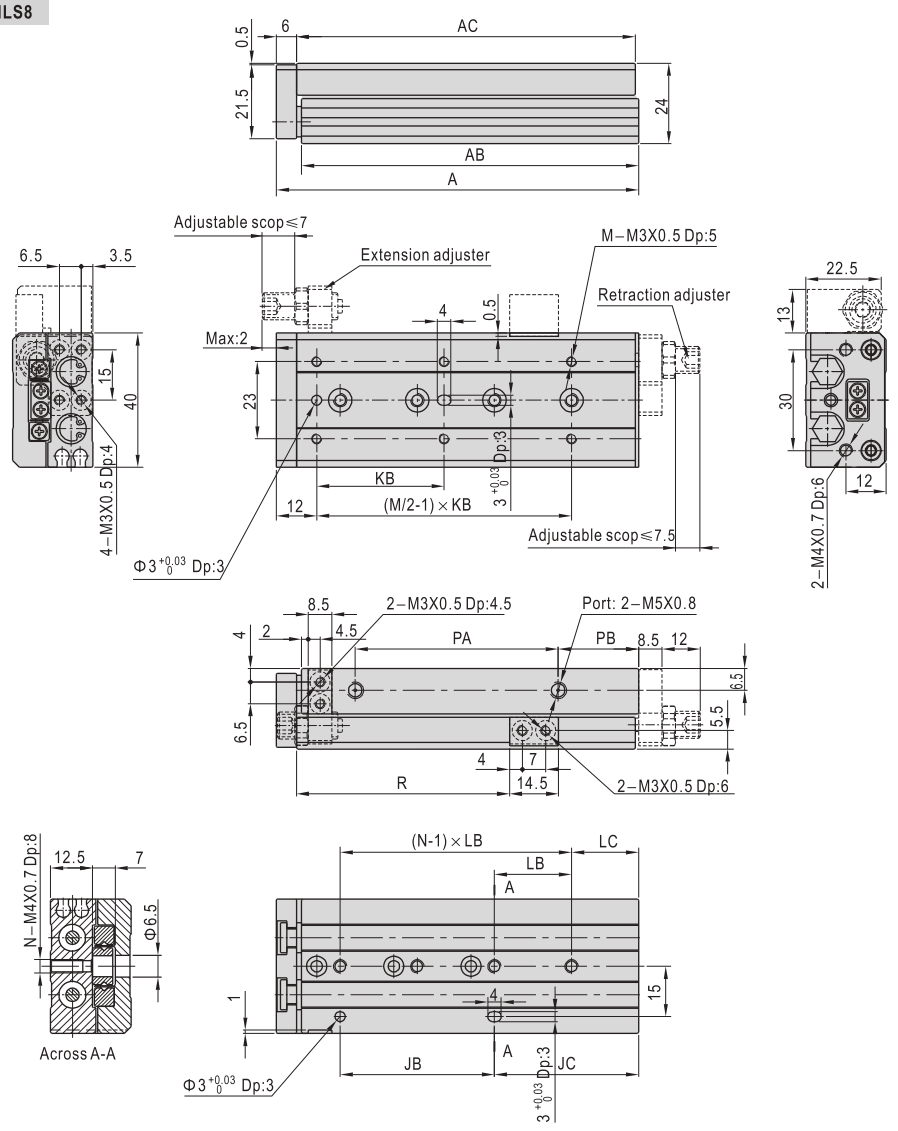

Stroke\Item	A	AB	AC	JB	JC	KB	LB	LC	M	N	PA	PB	R
10	56	48.5	49	20	17	25	28	9	4	2	20	12	23.5
20	61	53.5	54	30	12	25	30	12	4	2	30	7	33.5
30	72	64.5	65	20	33	40	20	13	4	3	41	7	43.5
40	90	82.5	83	28	43	50	28	15	4	3	56	10	53.5
50	108	100.5	101	46	43	38	23	20	6	4	61	23	63.5
75	158	150.5	151	56	83	50	28	27	6	5	94	40	88.5

HLS8(With shock absorber)

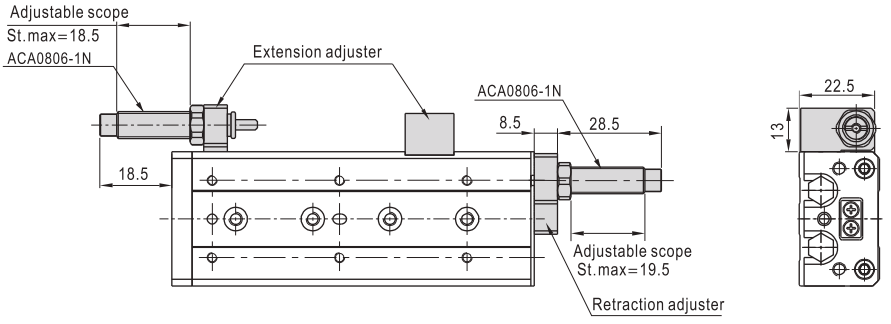

HLSL8

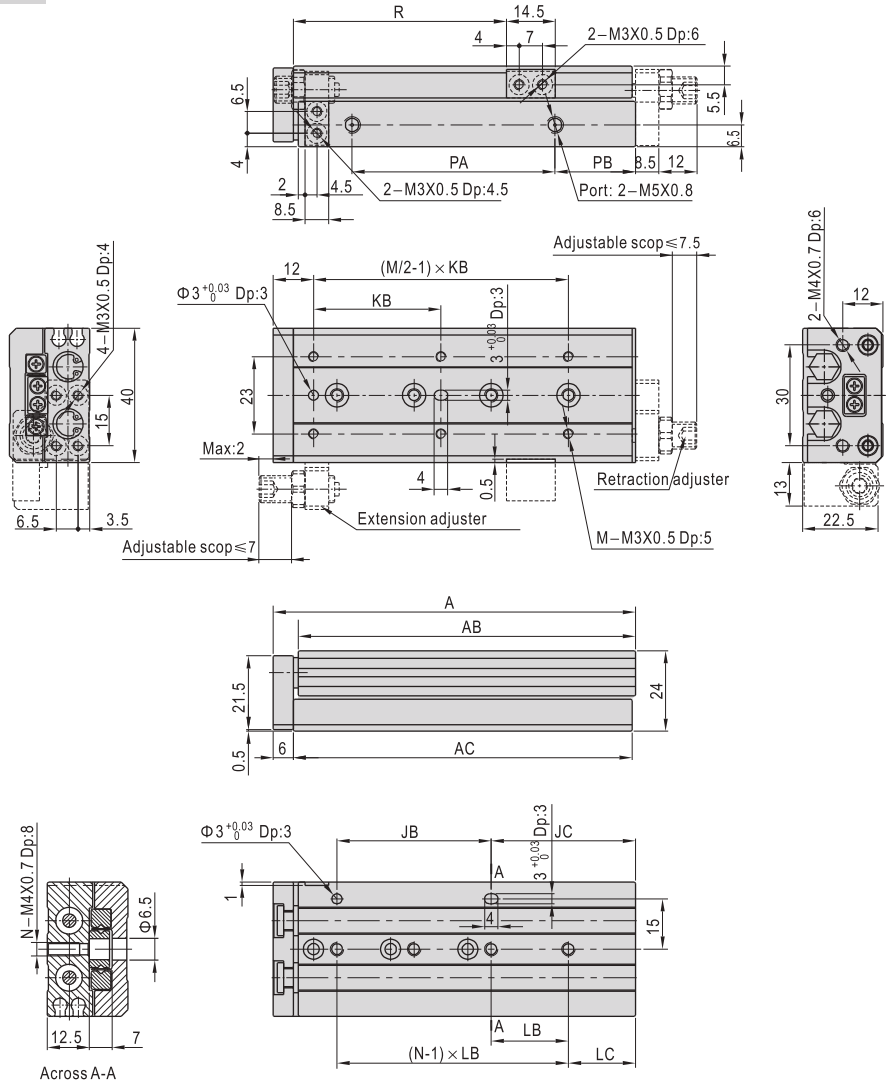

Stroke\Item	A	AB	AC	JB	JC	KB	LB	LC	M	N	PA	PB	R
10	56	48.5	49	20	17	25	28	9	4	2	20	12	23.5
20	61	53.5	54	30	12	25	30	12	4	2	30	7	33.5
30	72	64.5	65	20	33	40	20	13	4	3	41	7	43.5
40	90	82.5	83	28	43	50	28	15	4	3	56	10	53.5
50	108	100.5	101	46	43	38	23	20	6	4	61	23	63.5
75	158	150.5	151	56	83	50	28	27	6	5	94	40	88.5

HLSL8(With shock absorber)

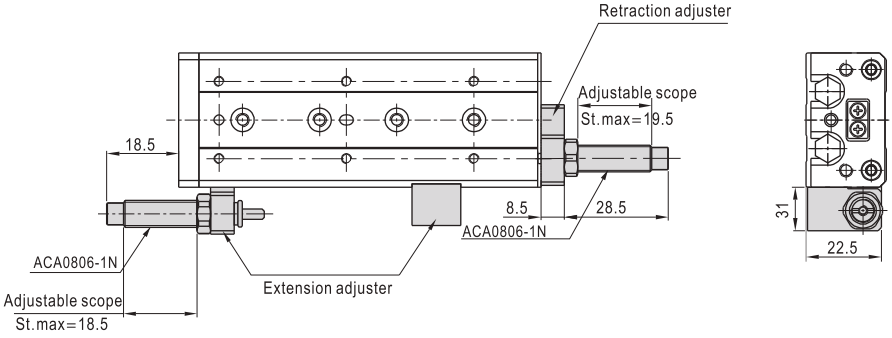

HLS12

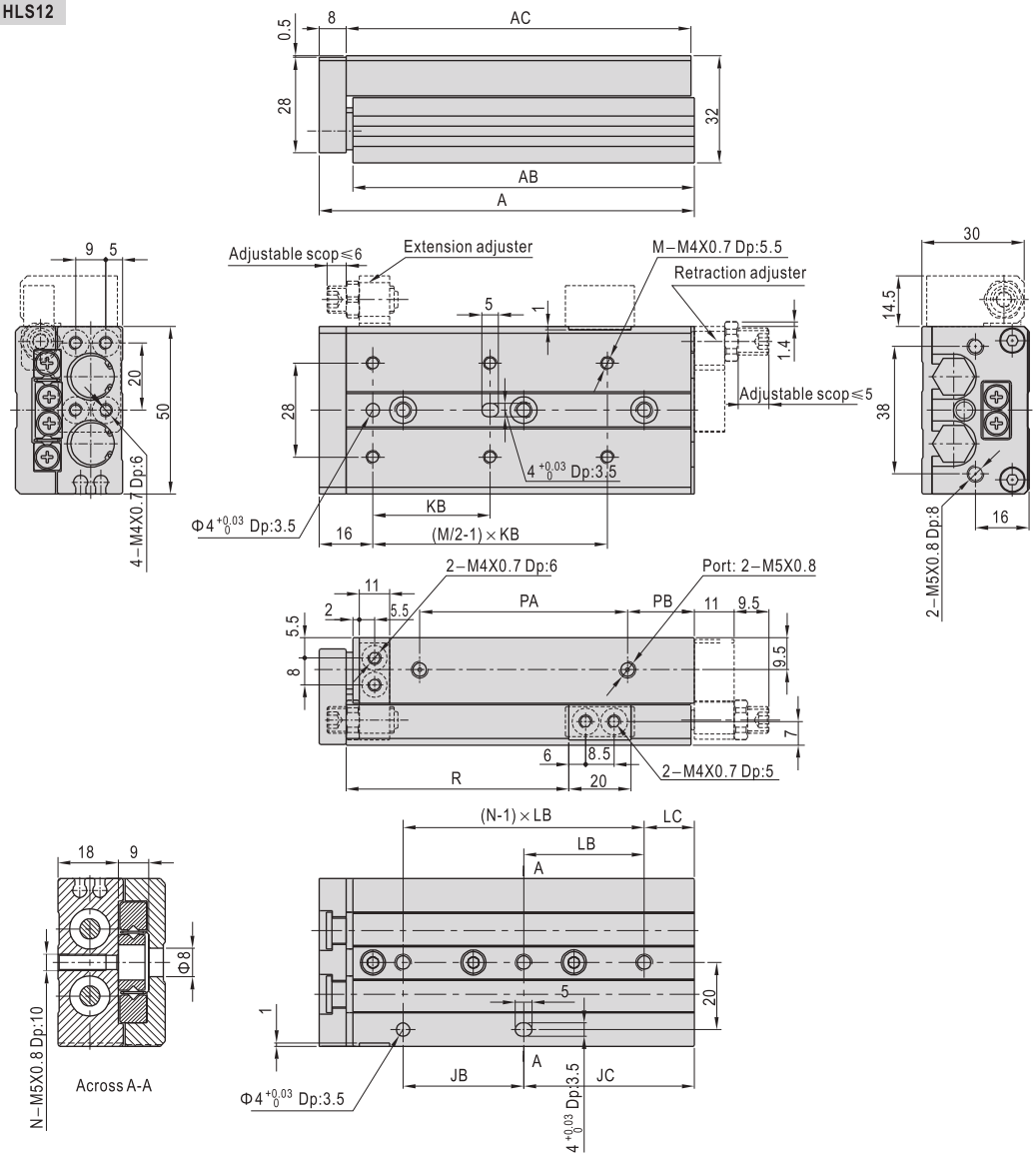

Stroke\Item	A	AB	AC	JB	JC	KB	LB	LC	M	N	PA	PB	R
10	80	70	71	40	15	35	40	15	4	2	39.5	10	25
20	80	70	71	40	15	35	40	15	4	2	39.5	10	35
30	80	70	71	40	15	35	40	15	4	2	39.5	10	45
40	92	82	83	25	42	50	25	17	4	3	51.5	10	55
50	112	102	103	36	51	35	36	15	6	3	61.5	20	65
75	158	148	149	72	61	55	36	25	6	4	87.5	40	90
100	212	202	203	76	111	65	38	35	6	5	131.5	50	115

HLS12(With shock absorber)

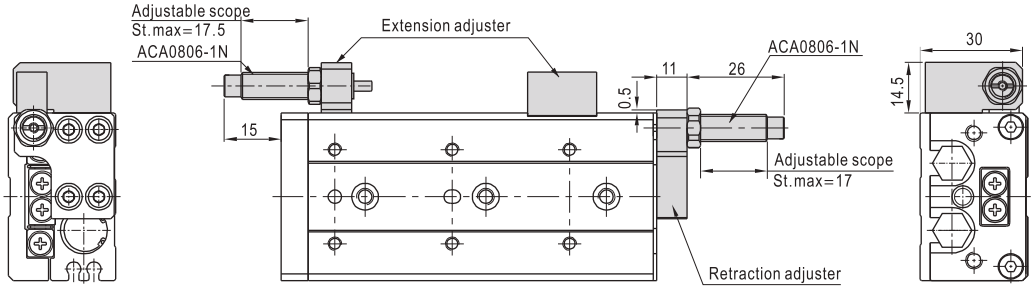

HLSL12

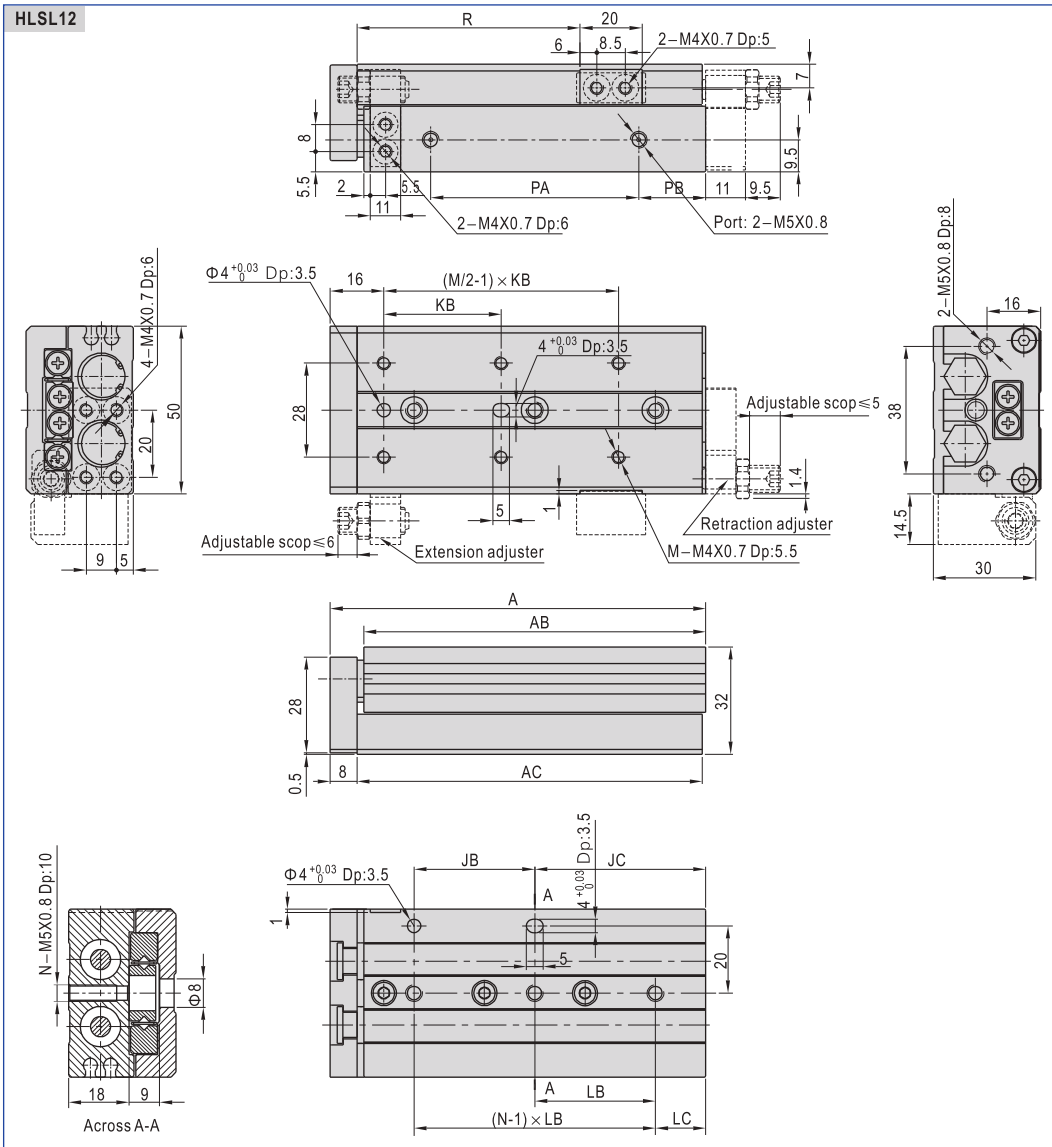

Stroke\Item	A	AB	AC	JB	JC	KB	LB	LC	M	N	PA	PB	R
10	80	70	71	40	15	35	40	15	4	2	39.5	10	25
20	80	70	71	40	15	35	40	15	4	2	39.5	10	35
30	80	70	71	40	15	35	40	15	4	2	39.5	10	45
40	92	82	83	25	42	50	25	17	4	3	51.5	10	55
50	112	102	103	36	51	35	36	15	6	3	61.5	20	65
75	158	148	149	72	61	55	36	25	6	4	87.5	40	90
100	212	202	203	76	111	65	38	35	6	5	131.5	50	115

HLSL12(With shock absorber)

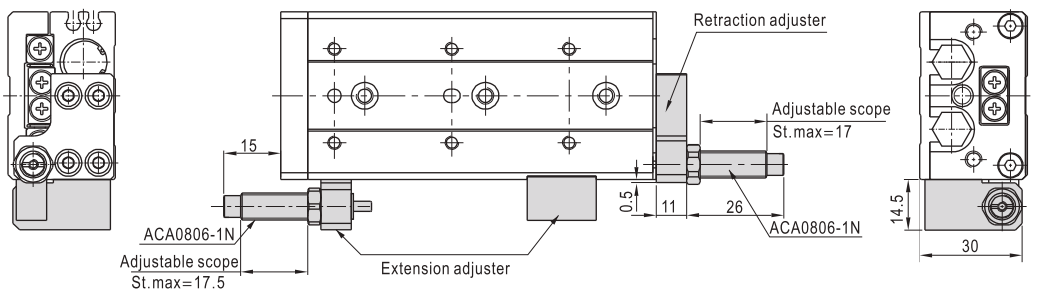

HLS16

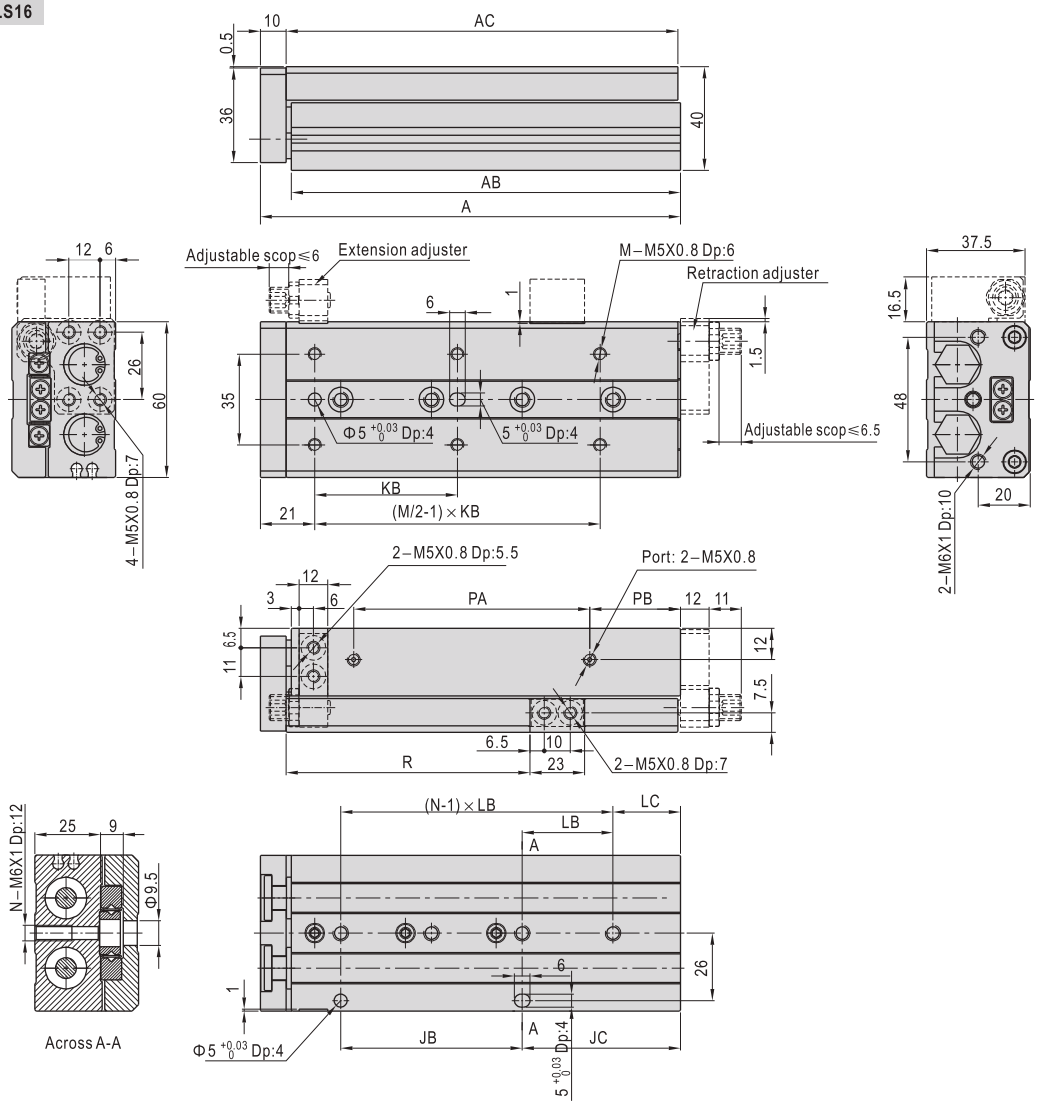

Stroke\Item	A	AB	AC	JB	JC	KB	LB	LC	M	N	PA	PB	R
10	87	75	76	40	16	35	40	16	4	2	42.5	8	28.5
20	87	75	76	40	16	35	40	16	4	2	42.5	8	38.5
30	87	75	76	40	16	35	40	16	4	2	42.5	8	48.5
40	97	85	86	50	16	40	50	16	4	2	52.5	8	58.5
50	112	100	101	30	51	30	30	21	6	3	63.5	12	68.5
75	162	150	151	70	61	55	35	26	6	4	90.5	35	93.5
100	210	198	199	70	109	65	35	39	6	5	118.5	55	118.8
125	260	248	249	70	159	70	35	19	8	7	153.5	70	143.5

HLS16(With shock absorber)

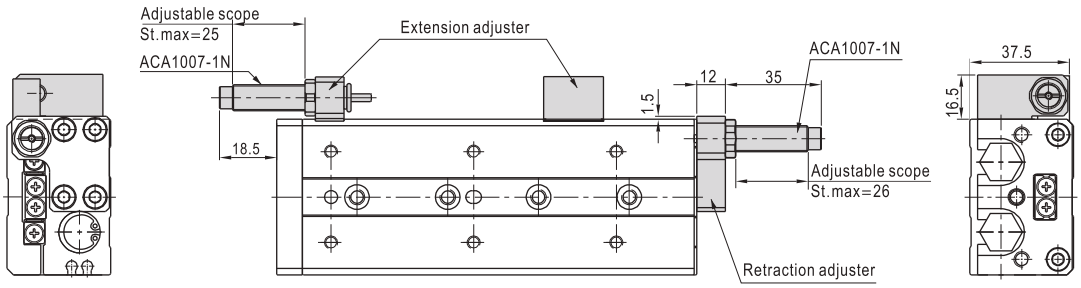

HLSL16

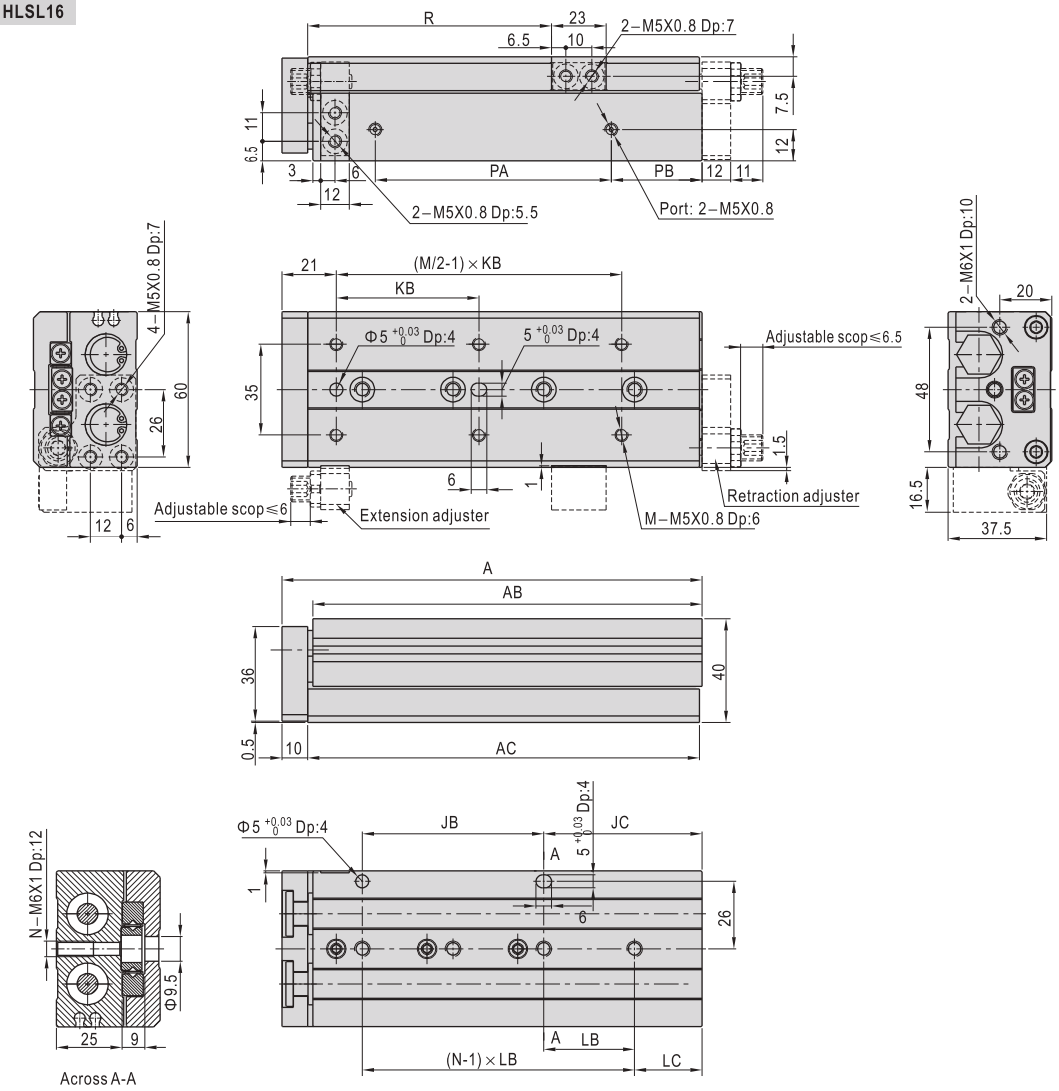

Stroke\Item	A	AB	AC	JB	JC	KB	LB	LC	M	N	PA	PB	R
10	87	75	76	40	16	35	40	16	4	2	42.5	8	28.5
20	87	75	76	40	16	35	40	16	4	2	42.5	8	38.5
30	87	75	76	40	16	35	40	16	4	2	42.5	8	48.5
40	97	85	86	50	16	40	50	16	4	2	52.5	8	58.5
50	112	100	101	30	51	30	30	21	6	3	63.5	12	68.5
75	162	150	151	70	61	55	35	26	6	4	90.5	35	93.5
100	210	198	199	70	109	65	35	39	6	5	118.5	55	118.8
125	260	248	249	70	159	70	35	19	8	7	153.5	70	143.5

HLSL16(With shock absorber)

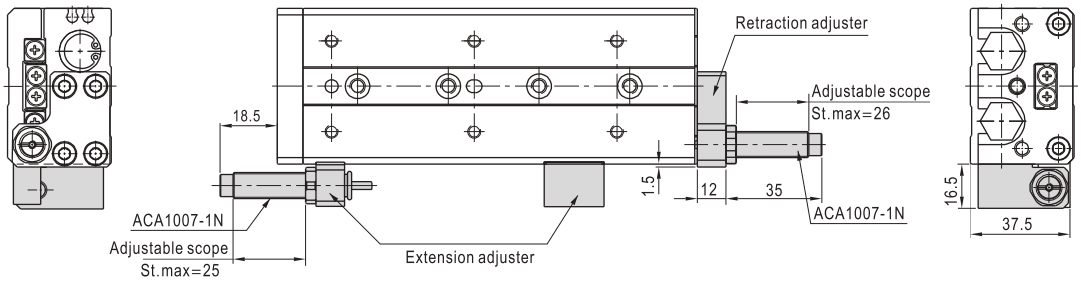

HLS20

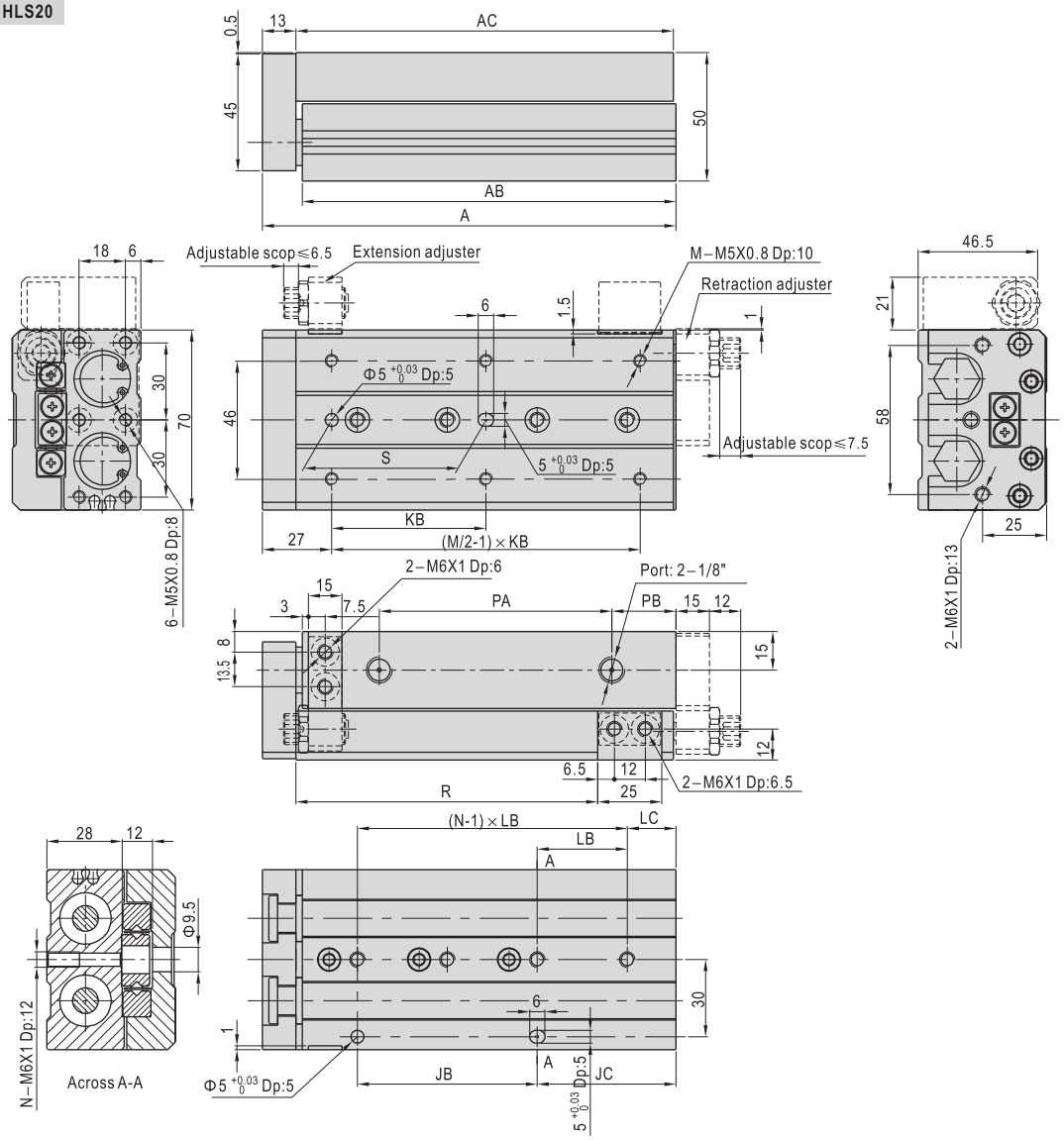

Stroke\Item	A	AB	AC	JB	JC	KB	LB	LC	M	N	S	PA	PB	R
10	97	81.5	83	35	25	50	45	15	4	2	40	43.5	10	32.5
20	97	81.5	83	35	25	50	45	15	4	2	40	43.5	10	42.5
30	97	81.5	83	35	25	50	45	15	4	2	40	43.5	10	52.5
40	107	91.5	93	35	35	60	55	15	4	2	50	53.5	10	62.5
50	122	106.	108	35	50	35	35	15	6	3	35	68.5	10	72.5
75	161	145.	147	70	54	60	35	19	6	4	60	107.5	10	97.5
100	214	198.	200	70	107	70	35	37	6	5	70	115.5	55	122.5
125	268	252.	254	76	155	70	38	41	8	6	70	154.5	70	147.5
150	320	304.	306	88	195	80	44	19	8	7	80	186.5	90	172.5

HLS20(With shock absorber)

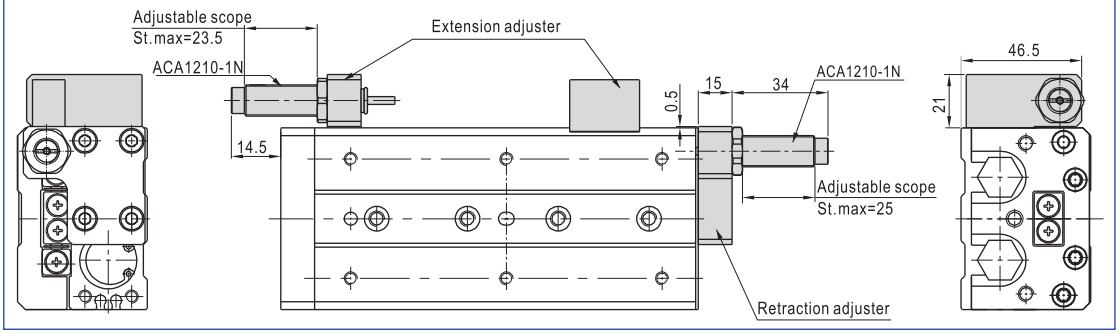

HLSL20

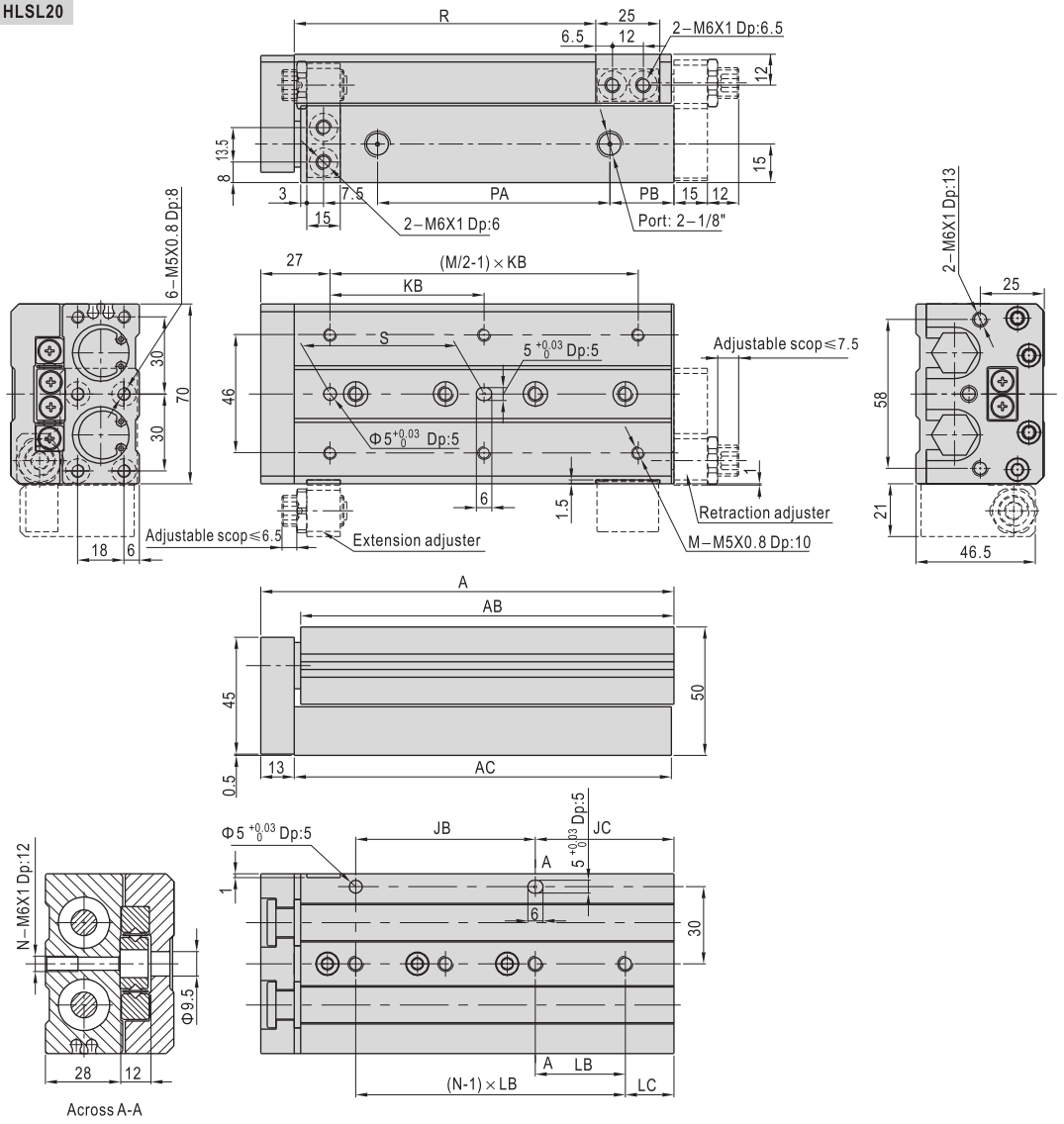

Stroke\Item	A	AB	AC	JB	JC	KB	LB	LC	M	N	S	PA	PB	R
10	97	81.5	83	35	25	50	45	15	4	2	40	43.5	10	32.5
20	97	81.5	83	35	25	50	45	15	4	2	40	43.5	10	42.5
30	97	81.5	83	35	25	50	45	15	4	2	40	43.5	10	52.5
40	107	91.5	93	35	35	60	55	15	4	2	50	53.5	10	62.5
50	122	106.5	108	35	50	35	35	15	6	3	35	68.5	10	72.5
75	161	145.5	147	70	54	60	35	19	6	4	60	107.5	10	97.5
100	214	198.5	200	70	107	70	35	37	6	5	70	115.5	55	122.5
125	268	252.5	254	76	155	70	38	41	8	6	70	154.5	70	147.5
150	320	304.5	306	88	195	80	44	19	8	7	80	186.5	90	172.5

HLSL20(With shock absorber)

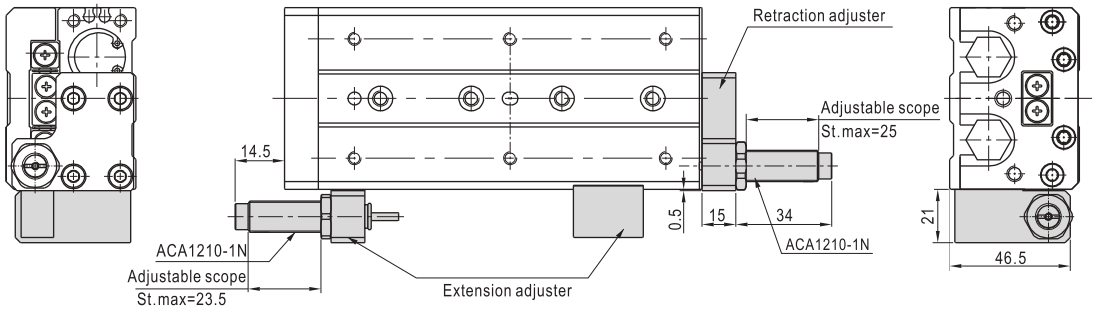

HLS25

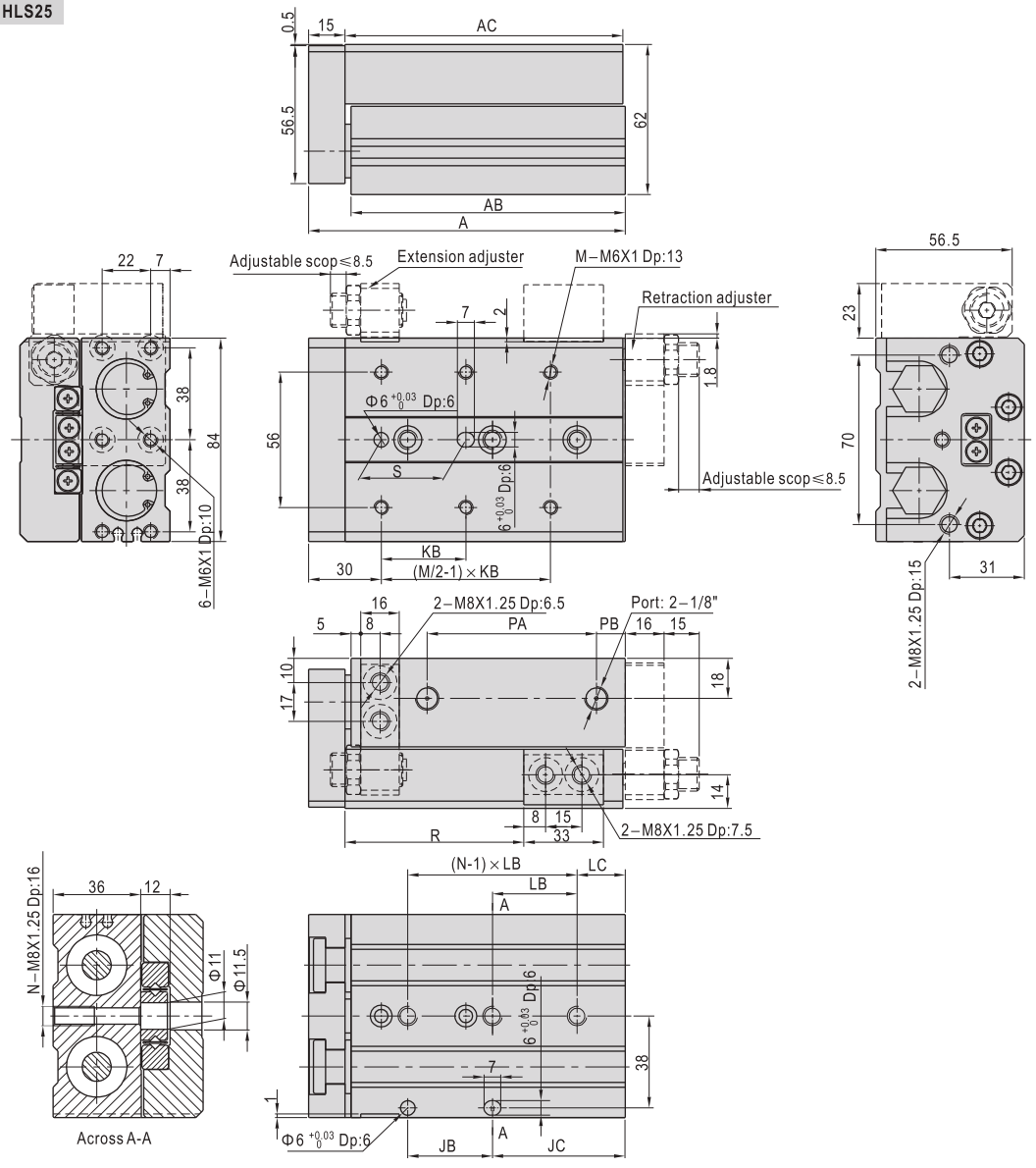

Stroke\Item	A	AB	AC	JB	JC	KB	LB	LC	M	N	S	PA	PB	R
10	108	90.5	92	45	22	50	45	22	4	2	40	47	12	35
20	108	90.5	92	45	22	50	45	22	4	2	40	47	12	45
30	108	90.5	92	45	22	50	45	22	4	2	40	47	12	55
40	118	100.5	102	55	22	60	55	22	4	2	50	57	12	65
50	131	113.5	115	35	55	35	35	20	6	3	35	70	12	75
75	172	154.5	156	70	61	60	35	26	6	4	60	90	33	100
100	213	195.5	197	70	102	70	35	32	6	5	70	119	45	125
125	271	253.5	255	76	154	75	38	40	8	6	75	155	67	150
150	311	293.5	295	80	190	80	40	30	8	7	80	180	82	175

HLS25(With shock absorber)

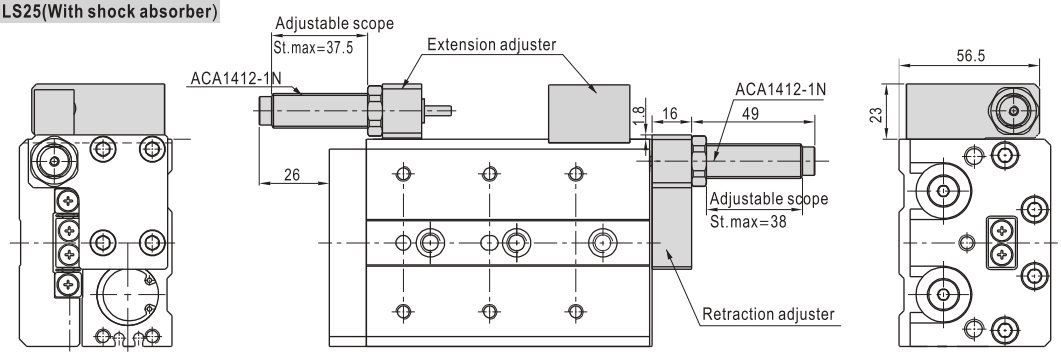

HLSL25

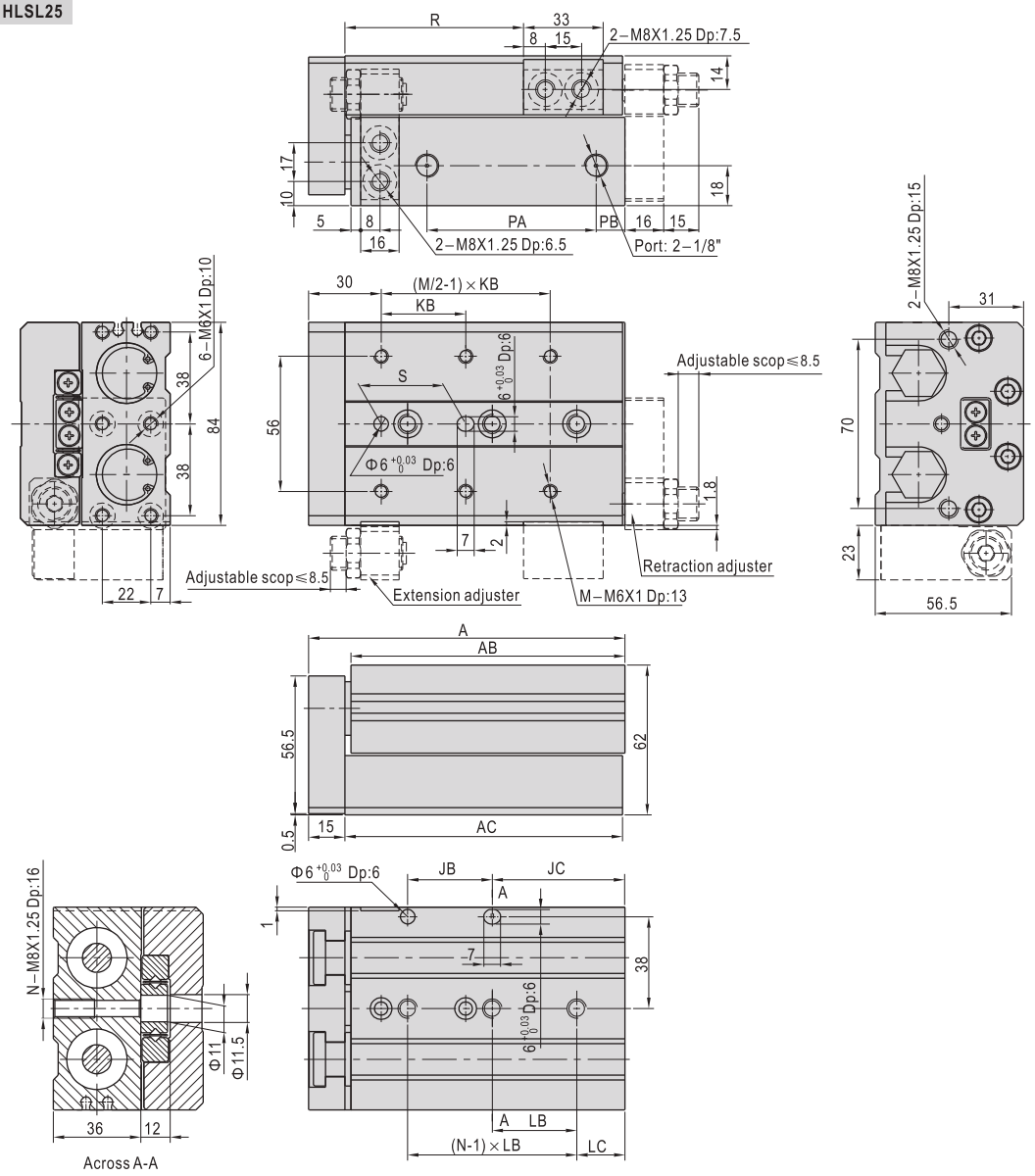

Stroke\Item	A	AB	AC	JB	JC	KB	LB	LC	M	N	S	PA	PB	R
10	108	90.5	92	45	22	50	45	22	4	2	40	47	12	35
20	108	90.5	92	45	22	50	45	22	4	2	40	47	12	45
30	108	90.5	92	45	22	50	45	22	4	2	40	47	12	55
40	118	100.5	102	55	22	60	55	22	4	2	50	57	12	65
50	131	113.5	115	35	55	35	35	20	6	3	35	70	12	75
75	172	154.5	156	70	61	60	35	26	6	4	60	90	33	100
100	213	195.5	197	70	102	70	35	32	6	5	70	119	45	125
125	271	253.5	255	76	154	75	38	40	8	6	75	155	67	150
150	311	293.5	295	80	190	80	40	30	8	7	80	180	82	175

HLSL25(With shock absorber)

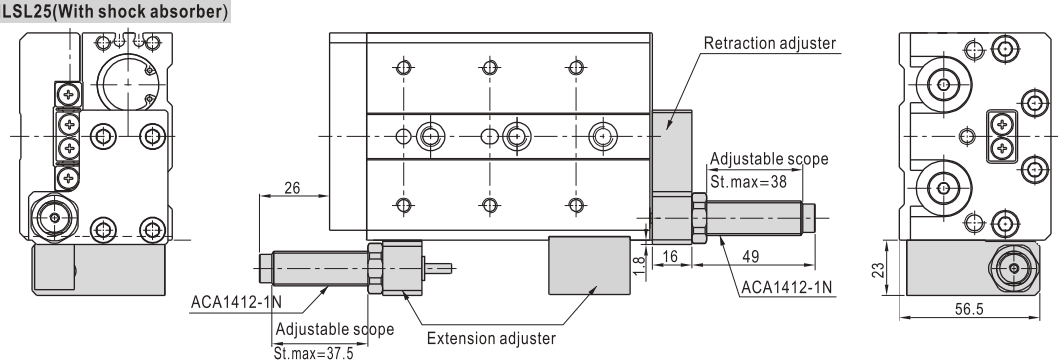

Ordering code

F-HLS 20 AS

Accessory

Model

HLS: Standard
HLSL: Symmetrical

Bore size

Accessory type ①

A: Adjustable rubber stopper(Both ends)
AF: Adjustable rubber stopper(Retraction)
B: Shock absorber(Both ends)
BF: Shock absorber(Retraction)

① The list accessories are for HLS cylinder. Accessories that are adaptable to other cylinder are not shown. Please refer to accessory list for selection and ordering information.

Accessory selection

	Accessories\Bore size		6	8	12
HLS: Standard	Both ends	A(Adjustable rubber stopper)	F-HLQ6A	F-HLS8A	F-HLS12A
		B(Shock absorber)	×	F-HLS8B	F-HLS12B
	Extention	AS(Adjustable rubber stopper)	F-HLQ6AS	F-HLQ8AS	F-HLQ12AS
		BS(Shock absorber)	×	F-HLQ8BS	F-HLQ12BS
	Retraction	AF(Adjustable rubber stopper)	F-HLQ6AF	F-HLQ8AF	F-HLQ12AF
		BF(Shock absorber)	×	F-HLQ8BF	F-HLQ12BF

	Accessories\Bore size		16	20	25
HLS: Standard	Both ends	A(Adjustable rubber stopper)	F-HLS16A	F-HLS20A	F-HLS25A
		B(Shock absorber)	F-HLS16B	F-HLS20B	F-HLS25B
	Extention	AS(Adjustable rubber stopper)	F-HLQ16AS	F-HLQ20AS	F-HLQ25AS
		BS(Shock absorber)	F-HLQ16BS	F-HLQ20BS	F-HLQ25BS
	Retraction	AF(Adjustable rubber stopper)	F-HLS16AF	F-HLS20AF	F-HLS25AF
		BF(Shock absorber)	F-HLS16BF	F-HLS20BF	F-HLS25BF

	Accessories\Bore size		6	8	12
HLSL: Symmetrical	Both ends	A(Adjustable rubber stopper)	F-HLQL6A	F-HLSL8A	F-HLSL12A
		B(Shock absorber)	×	F-HLSL8B	F-HLSL12B
	Extention	AS(Adjustable rubber stopper)	F-HLQ6AS	F-HLQ8AS	F-HLQ12AS
		BS(Shock absorber)	×	F-HLQ8BS	F-HLQ12BS
	Retraction	AF(Adjustable rubber stopper)	F-HLQL6AF	F-HLSL8AF	F-HLSL12AF
		BF(Shock absorber)	×	F-HLSL8BF	F-HLSL12BF

	Accessories\Bore size		16	20	25
HLSL: Symmetrical	Both ends	A(Adjustable rubber stopper)	F-HLSL16A	F-HLSL20A	F-HLSL25A
		B(Shock absorber)	F-HLSL16B	F-HLSL20B	F-HLSL25B
	Extention	AS(Adjustable rubber stopper)	F-HLQ16AS	F-HLQ20AS	F-HLQ25AS
		BS(Shock absorber)	F-HLQ16BS	F-HLQ20BS	F-HLQ25BS
	Retraction	AF(Adjustable rubber stopper)	F-HLSL16AF	F-HLSL20AF	F-HLSL25AF
		BF(Shock absorber)	F-HLSL16BF	F-HLSL20BF	F-HLSL25BF

Note): A=AS+AF; B=BS+BF.

Dimensions

AS: Adjustable rubber stopper(Extention)

Body Mounting

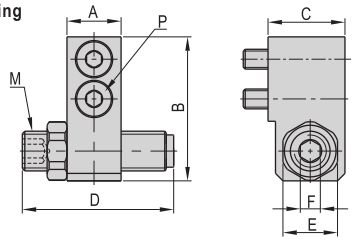

Table Mounting

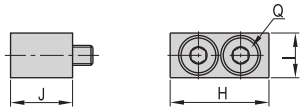

Bore size\Item	Adjusting stroke range	A	B	C	D	E	F
6	5	7	19	10.5	16.5	8	3
8	5	8.5	22	14	21.5	11	4
12	5	11	29	15.5	30.5	11	4
16	5	12	36	17.5	24	14	5
20	5	15	44.5	22	28	17	6
25	5	16	54	24	32	19	6

Bore size\Item	M	P	H	I	J	Q
6	M6 × 1.0	M2.5 Length: 10	12.5	6.5	10.5	M2.5 Length: 10
8	M8 × 1.0	M3 Length: 14	14.5	8	12	M3 Length: 14
12	M8 × 1.0	M4 Length: 16	20	9	12.5	M4 Length: 12
16	M10 × 1.0	M5 Length: 16	23	10.5	17	M5 Length: 16
20	M12 × 1.0	M6 Length: 20	25	12.5	21	M6 Length: 20
25	M14 × 1.5	M8 Length: 20	33	16.5	23	M8 Length: 20

BS: Shock absorber(Extention)

Body Mounting

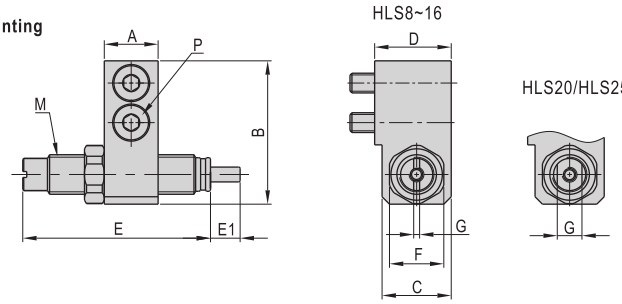

Table Mounting

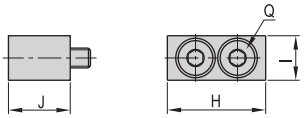

Bore size\Item	A	B	C	D	E	E1	F	G	M	P	H	I	J	Q
8	8.5	22	12.5	14	38	6	11	1.2	M8 × 1.0	M3 Length: 14	14.5	8	12	M3 Length: 14
12	11	29	14	15.5	38	6	11	1.2	M8 × 1.0	M4 Length: 16	20	9	12.5	M4 Length: 12
16	12	36	16	17.5	48	7	14	1.2	M10 × 1.0	M5 Length: 16	23	10.5	17	M5 Length: 16
20	15	44.5	20	22	50	10	17	11	M12 × 1.0	M6 Length: 20	25	12.5	21	M6 Length: 20
25	16	54	22	24	66	12	19	12	M14 × 1.5	M8 Length: 20	33	16.5	23	M8 Length: 20

AF: Adjustable rubber stopper(Retraction)

For standard type

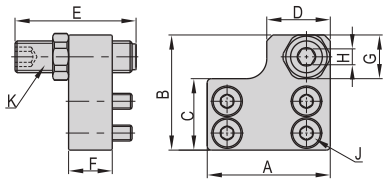

For symmetrical type

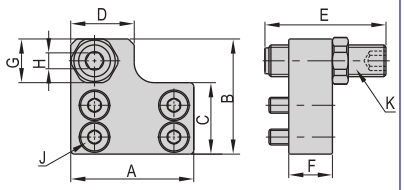

Bore size\Item	Adjusting stroke range	A	B	C	D	E	F	G	H	J	K
6	5	18	19	11	8	21.5	7	8	3	M2.5 Length: 6	M6 × 1.0
8	5	24	23.5	13	14	21.5	8.5	11	3	M3 Length: 8	M8 × 1.0
12	5	31	29	18	16	21.5	11	11	4	M4 Length: 12	M8 × 1.0
16	5	37	37.5	23	18	24	12	14	5	M5 Length: 12	M10 × 1.0
20	5	45.5	47	28.5	23	28	15	17	6	M5 Length: 16	M12 × 1.0
25	5	54	56	34	28	32	16	19	6	M6 Length: 18	M14 × 1.5

BF: Shock absorber(Retraction)

For standard type

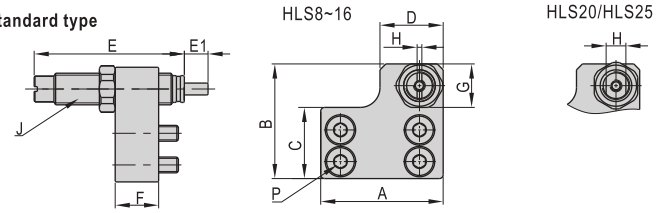

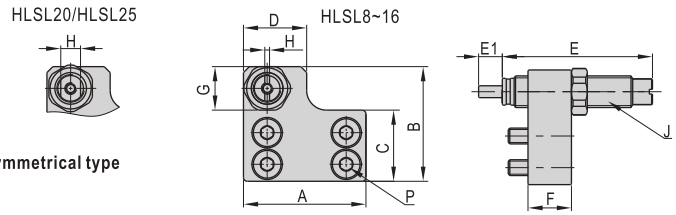

For symmetrical type

Bore size\Item	A	B	C	D	E	E1	F	G	H	J	P
8	24	23.5	13	14	38	6	8.5	11	1.2	M8 × 1.0	M3 Length: 8
12	31	29	18	16	38	6	11	11	1.2	M8 × 1.0	M4 Length: 12
16	37	37.5	23	18	48	7	12	14	1.2	M10 × 1.0	M5 Length: 12
20	45.5	47	28.5	23	50	10	15	17	11	M12 × 1.0	M5 Length: 16
25	54	56	34	28	66	12	16	19	12	M14 × 1.5	M6 Length: 18

Product series

Series name	Mounting type	Acting type	Bore size
RMS Series	Basic LB FA	Double acting	10 16 20 25 32 40
RMSP Series		Double acting	16 20 32
RMSF Series		Double acting	16 20 25 32 40
Page 302	304		

Installation and application

1. The maxi load to move must be less than the theoretical holding force.

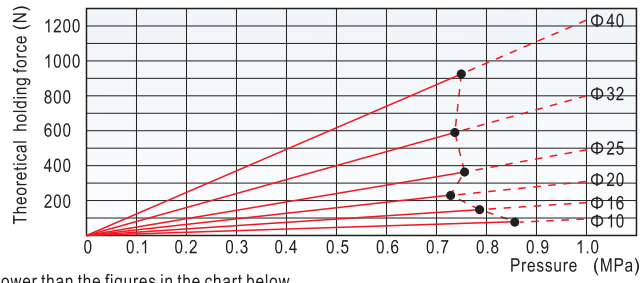

2. Horizontal mounting, the permissible radial load must be lower than the figures in the chart below.

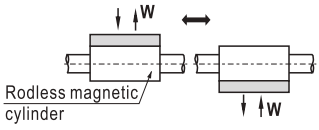

Horizontal mounting(radial load)

Bore size	Max. load W
10	1.1kg
16	2.8kg
20	4.7kg
25	6.8kg
32	9.7kg
40	15.8kg

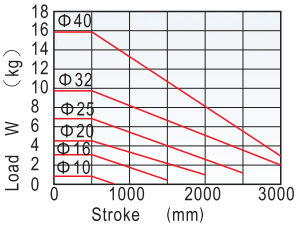

3. Vertical mounting, the allowable direction moment must be lower than the figures in the chart below, the dimensions of geometrical can be determined by the relation graph between loading and stroke.

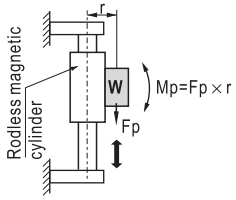

Bore size	Allowable direction moment Mp
10	0.50kgf · m
16	1.20kgf · m
20	2.45kgf · m
25	3.92kgf · m
32	8.83kgf · m
40	13.7kgf · m

Note) Loading should be used with oriented device, example:

Horizontal oriented device

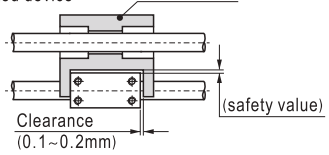

Vertical oriented device

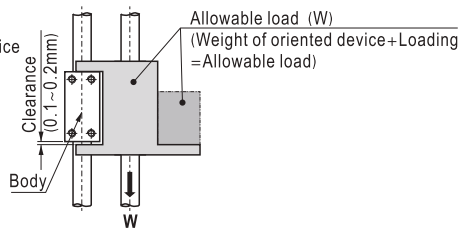

4. Dirty substances in the pipe must be eliminated before cylinder is connected with pipeline to prevent the entrance of impurities into the cylinder.
5. The medium used by cylinder shall be filtered to 40 μ m or below.
6. If the cylinder is dismantled and stored for a long time, pay attention to conduct anti–rust treatment to the surface. Anti–dust jam cap shall be added in air inlet and outlet ports.

RMS

Specification

Series name	RMS	RMS, RMSF Series					RMSP Series		
Bore size (mm)	16	16	20	25	32	40	16	20	32
Acting type	Double acting								
Fluid	Air(to be filtered by 40 μ m filter element)								
Operating pressure	0.15~0.7MPa(23~100psi)(1.5~7bar)								
Proof pressure	1.0MPa(145psi)(10.0bar)								
Temperature ℃	-10~60								
Speed range mm/s	50~400								
Stroke tolerance mm	0~250 $^{+1.0}_{0}$ 251~1000 $^{+1.5}_{0}$ 1001~ $^{+2.0}_{0}$								
Cushion type	Variable cushion+Fixed cushion								
Port size ①	M5 × 0.8		1/8"			1/4"	M5 × 0.8	1/8"	
Safe holding force N	60	140	200	360	550	850	140	200	550

① G thread and NPT thread are available.

Stroke

Bore size (mm)	Standard stroke (mm)	Max. stroke(mm)
10	50 100 150 200 250 300	1000
16	50 100 150 200 250 300 350 400 450 500	1500
20	50 100 150 200 250 300 350 400 450 500 600 700 750 800 900 1000	2000
25	50 100 150 200 250 300 350 400 450 500 600 700 750 800 900 1000	2500
32	50 100 150 200 250 300 350 400 450 500 600 700 750 800 900 1000	3000
40	50 100 150 200 250 300 350 400 450 500 600 700 750 800 900 1000	3000

Note) Consult us for non-standard stroke.

Symbol

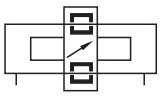

Product feature

1. This magnetic cylinder is basically a pneumatic rodless cylinder featuring a mobile piston fitted with annular magnets. The mobile carriage is also equipped with magnets to provide magnetic coupling (carriage/piston). The carriage slide freely along the main tube.
2. It is dust-proof as the isolation between the carriage and piston.
3. It is compact in space.
4. The non adjustable rubber bumpers and the adjustable pneumatic cushioning on both ends of the cylinder ensure the smooth action.

Ordering code

RMS □ 20 × 200 □ G

Model
RMS: Rodless magnetic cylinder

Version
Blank: basic version
P: P size version
F: F size version

Bore size

Series name	Bore size
RMS	10
RMS, RMSF	16, 20, 25, 32, 40
RMSP	16, 20, 32

Stroke
Refer to stroke table for details

Mounting type
Blank: non bracket
LB: LB type
FA: FA type ①

Thread type ②
G: G
T: NPT

Remark:
① RMSF40 series do not have FA mounting accessories.
② Blank on thread code means metric M thread. There is only metric thread for Φ16. If G or NPT thread is needed, please comment.

Inner structure and material of major parts

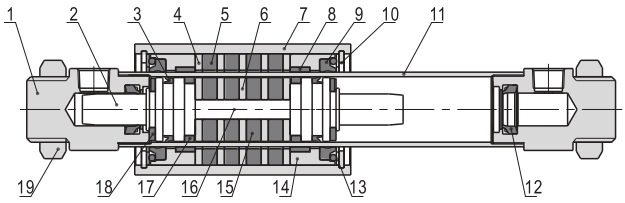

NO.	Item	Material
1	End cap	Aluminum alloy
2	Piston	Aluminum alloy
3	Piston seal	TPU
4	Magnet washer	Carbon steel
5	Magnet	Rare-earth material
6	Magnet washer	Carbon steel
7	Body	Aluminum alloy
8	Wear ring	Wear resistant material
9	Scraping dust ring	Plastics
10	C Clip	Spring steel
11	Barrel	Stainless steel
12	Cushion O-ring	TPU
13	Washer	Stainless steel
14	Cover	Aluminum alloy
15	Magnet	Rare-earth material
16	Connecting rod	Stainless steel
17	Wear ring	Wear resistant material
18	Bumper	NBR
19	Nut	Stainless steel

Dimensions

RMS、RMS-P

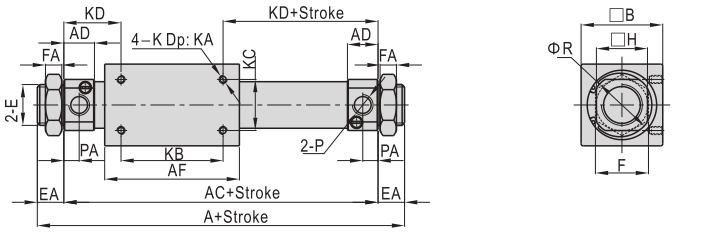

RMS-F

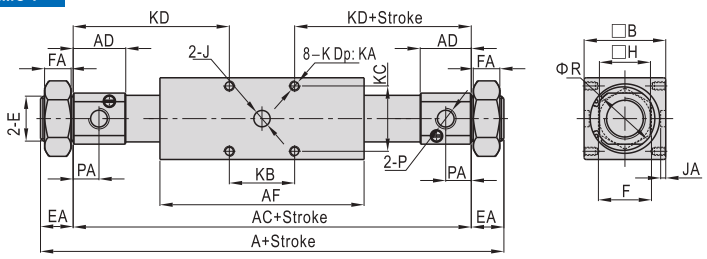

Model\Item	A	AC	AD	AF	B	E	EA	F	FA	H
RMS10	81	63	9.5	38	25	M10 × 1.0	9	14	4	15
RMS16	103	83	10	57	35	M10 × 1.0	10	14	4	20
RMSP16	112	92	14.5	57		M10 × 1.0	10	14	4	
RMSF16	205	181	34	80		M16 × 1.5	12	24	8	
RMS20	132	106	15	66	40	M20 × 1.5	13	26	8	25
RMSP20	143	115	19.5	66		M20 × 1.5	14	26	8	
RMSF20	217	185	29.5	90		M22 × 1.5	16	29	7	
RMS25	137	111	15	70	46	M26 × 1.5	13	32	8	30
RMSF25	238	206	37.5	90		M22 × 1.5	16	29	7	
RMS32	156	124	16	80	60	M26 × 1.5	16	32	8	36
RMSP32	165	133	20.5	80		M26 × 1.5		32	8	
RMSF32	270	238	48	110		M30 × 1.5		36	7	
RMS40	182	150	22	92	70	M32 × 2.0	16	41	10	46
RMSF40	327	295	44.5	130		M38 × 1.5		46	8	

Model\Item	J	JA	K	KA	KB	KC	KD	P	PA	R
RMS10	-	-	M3 × 0.5	4	30	16	16.5	M5 × 0.8	5	17
RMS16	-	-	M4 × 0.7	5	35	19	24	M5 × 0.8	5.5	22
RMSP16	-	-	M4 × 0.7	7	34	25	29		7.5	
RMSF16	8	3	M5 × 0.8	7.5	26	26	77.5		20	
RMS20	-	-	M4 × 0.7	5.5	50	25	28	1/8"	7.5	29
RMSP20	-	-	M5 × 0.8	7	40	30	37.5	1/8"	10	
RMSF20	8	2.5	M5 × 0.8	8.5	32	32	76		15	
RMS25	-	-	M5 × 0.8	7.5	50	30	30.5	1/8"	7.5	33.5
RMSF25	10	3	M6 × 1.0	10	36	36	85	1/8"	20	
RMS32	–	–	M6 × 1.0	8	50	40	37	1/8"	8	39.5
RMSP32	–	–		8			41.5	1/8"	10	
RMSF32	10	3.5		12.5	48	48	95		28	
RMS40	–	–	M6 × 1.0	9	60	40	45	1/4"	11	49.5
RMSF40	12	4.5	M8 × 1.25	16	50	56	122	1/4"	25	

Ordering code of accessories

F–RMS 32 LB

- Accessory
- Model
- Bore size
- Accessory type ①
  - LB：LB Type

① The list accessories are for RMS cylinder. Accessories that are adaptable to other cylinder are not shown. Please refer to accessory list for selection and ordering information.

Accessory selection

Accessories\Cylinder model		RMS	RMSP	RMSF
Mounting accessories	LB	●	●	●
	FA	●	●	●

Dimensions

RMS-LB, RMSP- LB

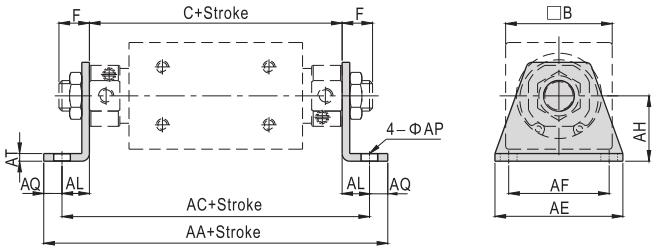

Bore size\Item	AA		AC		C		F	
	RMS	RMSP	RMS	RMSP	RMS	RMSP	RMS	RMSP
16	113	122	101	110	83	92	10	10
20	158	167	142	151	106	115	13	14
25	167	-	151	-	111	-	13	-
32	184	193	170	179	124	133	16	16
40	216	-	196	-	150	-	16	-

Bore size\Item	AE	AF	AH	AL	AP	AQ	AT	B
16	42	33	20	9	5.5	6	2.5	35
20	43	30	23	18	6.5	8	3	40
25	54	40	26	20	6.5	8	4	46
32	62	46	33	23	7	7	4	60
40	75	55	38	23	9	10	5	70

RMSF- LB

Φ16～Φ25

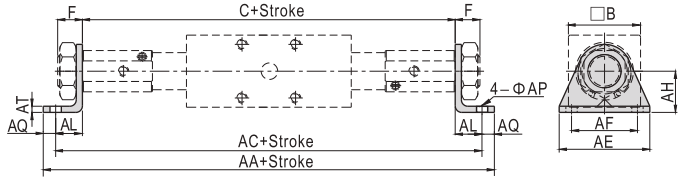

Φ32, Φ40

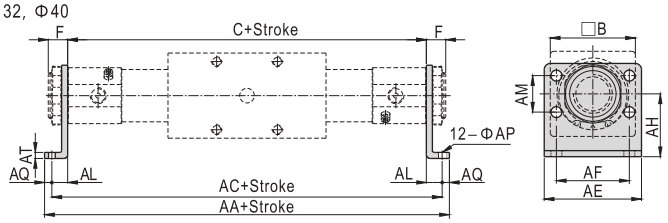

Bore size\Item	AA	AC	AE	AF	AH	AL	AM	AP	AQ	AT	B	C	F
16	221	209	44	32	20	14	-	5.5	6	2.5	35	181	12
20	235	219	54	40	23	17	-	6.5	8	3	40	185	16
25	256	240	54	40	26	17	-	6.5	8	4	46	206	16
32	280	266	66	52	33	14	28	7	7	4	60	238	16
40	353	333	80	60	38	19	30	9	10	5	70	295	16

RMS-FA, RMSP- FA

Φ16～Φ32

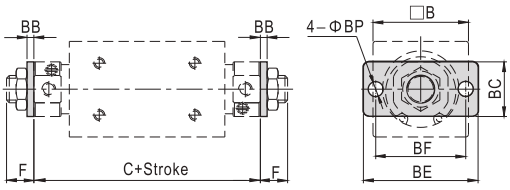

Φ40

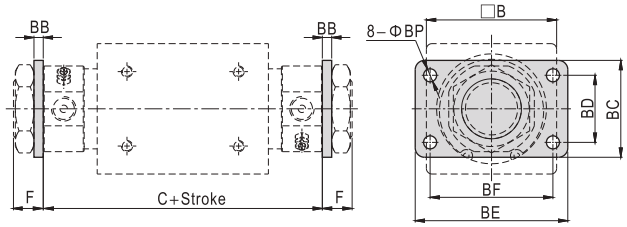

Bore size\Item	B	BB	BC	BD	BE	BF	BP	C		F	
								RMS	RMSP	RMS	RMSP
16	35	2.5	20	-	42	33	5.5	83	92	10	10
20	40	4	34	-	75	60	7	106	115	13	14
25	46	4	40	-	75	60	7	111	-	13	-
32	60	4	40	-	75	60	7	124	133	16	16
40	70	5	52	36	82	66	7	150	-	16	-

RMSF- FA

Φ16～Φ25

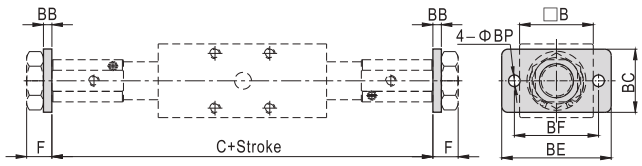

Φ32

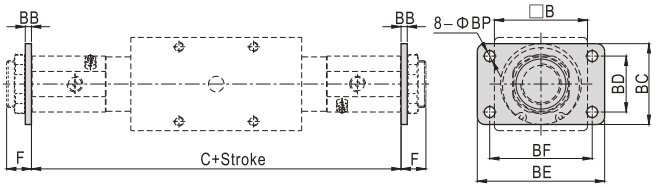

Bore size\Item	B	BB	BC	BD	BE	BF	BP	C	F
16	35	4	30	-	52	40	5.5	181	12
20	40	4	38	-	64	50	6.5	185	16
25	46	4	38	-	64	50	6.5	206	16
32	60	4	50	36	84	70	6.5	238	16

List for ordering code of accessories

Bore size\accessories	Cylinder model	Mounting accessories	
		LB	FA
16	RMS	F–RMS16LB	F–PB12FA
	RMSP		
	RMSF	F–RMSF16LB	F–MI12FA
20	RMS	F–RMS20LB	F–MF20FA
	RMSP		
	RMSF	F–RMSF20LB	F–MA20FA
25	RMS	F–RMS25LB	F–MF25FA
	RMSF	F–RMSF25LB	F–MA20FA
32	RMS	F–RMS32LB	F–MF25FA
	RMSP		
	RMSF	F–RMSF32LB	F–MA40FA
40	RMS	F–RMS40LB	F–MF40FA
	RMSF	F–RMSF40LB	–

Product series

Series name	Acting type	Bore size	Collocation of sensor switch CS1–G	Collocation of sensor switch DS1–G
RMT Series	Double acting	16 20 25 32 40	●	●
Page 306				381

Installation and application

1. Dirty substances in the pipe must be eliminated before cylinder is connected with pipeline to prevent the entrance of impurities into the cylinder.
2. The medium used by cylinder shall be filtered to 40 μ m or below.
3. Anti-freezing measure shall be adopted under low temperature environment to prevent moisture freezing.
4. If the cylinder is dismantled and stored for a long time, pay attention to conduct anti–rust treatment to the surface. Anti–dust caps shall be added in air inlet and outlet ports.

Symbol

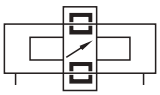

Product feature

1. This magnetic cylinder is basically a pneumatic rodless cylinder featuring a mobile piston fitted with annular magnets. The mobile carriage is also equipped with magnets to provide magnetic coupling (carriage/piston). The carriage slide freely along the main tube.
2. It is dust-proof as the isolation between the carriage and piston.
3. It is compact in space.
4. The non adjustable rubber bumpers and the adjustable pneumatic cushioning on both ends of the cylinder ensure the smooth action. if shock absorber be used, the cushioning effect is more perfection.
5. Double guides ensure high precision and can endure proper side load or prejudicial load.

RMT

Specification

Bore size (mm)	16	20	25	32	40
Acting type	Double acting				
Fluid	Air(to be filtered by 40 μ m filter element)				
Operating pressure	0.18~0.7MPa(28~100psi(1.8~7bar)				
Proof pressure	1.0MPa(145psi)(10.0bar)				
Temperature (℃)	-10~60				
Speed range (mm/s)	50~400				
Stroke tolerance (mm)	0~250 $^{+1.0}_{0}$	251~1000 $^{+1.5}_{0}$	1001~ $^{+2.0}_{0}$		
Cushion type	Fixed cushion	Shock absorber(Available)			
Safe holding force (N)	140	200	320	550	850
Port size ①	M5 × 0.8	1/8"			1/4"

① G thread and NPT thread are available. Add) Refer to P381~402 for detail of sensor switch.

Stroke

Bore size (mm)	Standard stroke (mm)	Max. stroke(mm)
16	50 100 150 200 250 300 350 400 450 500	750
20	50 100 150 200 250 300 350 400 450 500 600 700 750 800	1000
25	50 100 150 200 250 300 350 400 450 500 600 700 750 800	1500
32	50 100 150 200 250 300 350 400 450 500 600 700 750 800	1500
40	50 100 150 200 250 300 350 400 450 500 600 700 750 800 900 1000	1500

Note) Consult us for non–standard stroke.

Ordering code

RMT 20 × 100 S □ G

Model
RMT: Rodless magnetic cylinder(With guide)

Bore size
16, 20, 25, 32, 40

Stroke
Refer to stroke table for details

Magnet
Blank: Without magnet
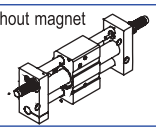
S: With magnet
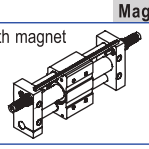

Thread type ①
G: G
T: NPT

Cushion type
Blank: With two adjustable nuts
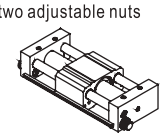
A: With two shock absorbers
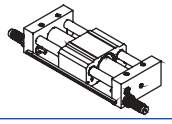

Remark:
① Blank on thread code means metric M thread. There is only metric thread for Φ16. If G or NPT thread is needed, please comment.

Mounting type

Top bolt mounting
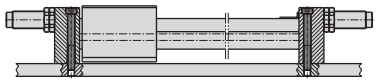
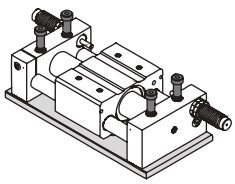

Bottom bolt mounting
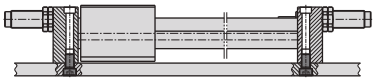
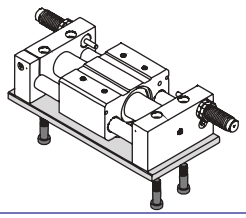

Installation and application

1. How to determine load:

1.1) The maxi load to move must be less than the theoretical holding force.

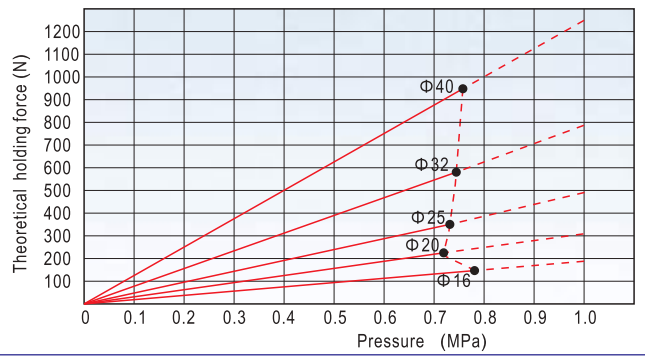

1.2) The relation between loading and stroke as below(Loading center and slide table center must be superposition)

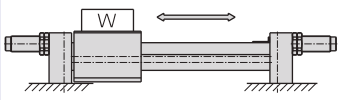

Bore size	Max.Load W(kg)	Stroke scope
16	5.5	~500mm
20	9.6	~500mm
25	16	~500mm
32	24	~600mm
40	40	~600mm

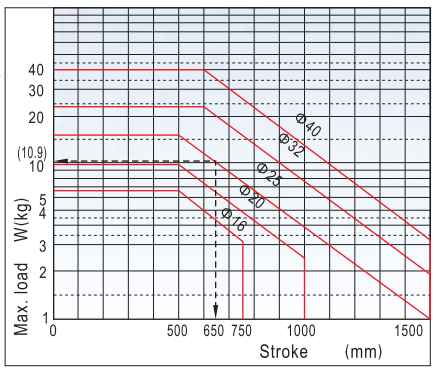

1.3) You should keep the loading center and the slide table center be superposition, if not you can calculate the load as below method.

First you should calculate the applied load coefficient(σ):

Example) Bore size: 25mm, Stroke: 650mm

(1)Max. Load=16kg

(2)When stroke=650mm, the allowable load=10.9kg

(3) σ =10.9/16=0.68

Note) When bore size is Φ16 and stroke is 500mm, or bore size is Φ20 and stoke is 500mm, or bore size is Φ25 and stoke is 500mm , or bore size is Φ32 and stoke is 600mm,or bore size is Φ40 and stoke is 600mm, the σ =1.

1.3.1) Horizontal acting(Vertical mounting):

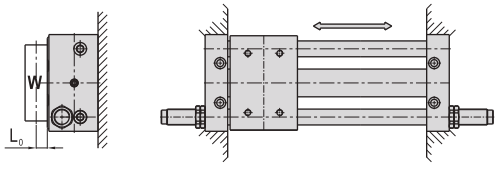

Bore size	Max. load W(kg)
16	$\frac{\sigma \times 36.4}{10.6+2\times L_0}$
20	$\frac{\sigma \times 74.4}{12+2\times L_0}$
25	$\frac{\sigma \times 140}{13.8+2\times L_0}$
32	$\frac{\sigma \times 258}{17+2\times L_0}$
40	$\frac{\sigma \times 520}{20.6+2\times L_0}$

1.3.2) Horizontal acting(Loading center and slide table center offset):

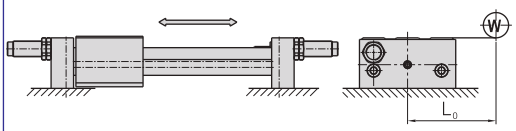

Bore size	Max. load W(kg)
16	$\frac{\sigma \times 25.48}{5.2+L_0}$
20	$\frac{\sigma \times 52.1}{6.2+L_0}$
25	$\frac{\sigma \times 98}{7.0+L_0}$
32	$\frac{\sigma \times 180}{8.6+L_0}$
40	$\frac{\sigma \times 364}{10.4+L_0}$

1.3.3) Horizontal acting(Loading barycenter and acting direction is coplanar. Loading center and slide table center offset):

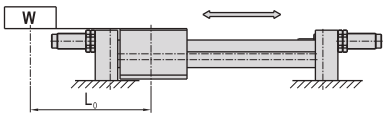

Bore size	16	20	25	32	40
Max. load W (kg)	$\frac{\sigma \times 17.5}{5.0+L_0}$	$\frac{\sigma \times 36}{6.0+L_0}$	$\frac{\sigma \times 60}{6.0+L_0}$	$\frac{\sigma \times 105}{7.0+L_0}$	$\frac{\sigma \times 200}{8.0+L_0}$

1.3.4) Incline acting(Acting direction and barycenter is vertical):

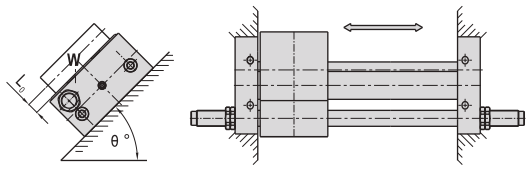

Bore size	Max. load W(kg)
16	$\frac{\sigma \times 36.4}{5.2+2(2.7+L_0)\sin\theta}$
20	$\frac{\sigma \times 74.4}{6.2+2(2.9+L_0)\sin\theta}$
25	$\frac{\sigma \times 140}{7+2(3.4+L_0)\sin\theta}$
32	$\frac{\sigma \times 258}{8.6+2(4.2+L_0)\sin\theta}$
40	$\frac{\sigma \times 520}{10.4+2(5.1+L_0)\sin\theta}$

1.3.5) Incline acting(Acting direction):

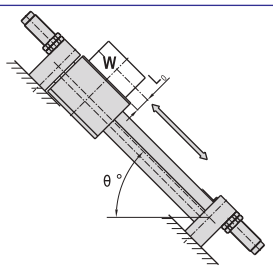

Bore size	Max. load W(kg)
16	$\frac{\sigma \times 35 \times k}{5\cos\theta+2(2.7+L_0)\sin\theta}$
20	$\frac{\sigma \times 72 \times k}{6\cos\theta+2(2.9+L_0)\sin\theta}$
25	$\frac{\sigma \times 120 \times k}{6\cos\theta+2(3.4+L_0)\sin\theta}$
32	$\frac{\sigma \times 210 \times k}{7\cos\theta+2(4.2+L_0)\sin\theta}$
40	$\frac{\sigma \times 400 \times k}{8\cos\theta+2(5.1+L_0)\sin\theta}$

Angle	~45°	~60°	~75°	~90°
Angle coefficient K	1	0.9	0.8	0.7

1.3.6) Horizontal acting(Loading offset):

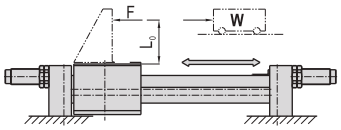

Bore size	16	20	25	32	40
Max. load W (kg)	$\frac{\sigma \times 17.5}{2.7+L_0}$	$\frac{\sigma \times 36}{2.9+L_0}$	$\frac{\sigma \times 60}{3.4+L_0}$	$\frac{\sigma \times 105}{4.2+L_0}$	$\frac{\sigma \times 200}{5.1+L_0}$

1.3.7) Vertical acting:

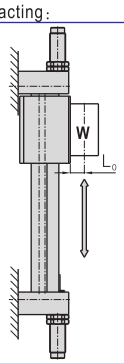

Bore size	Max. load W(kg)
16	$\frac{\sigma \times 13.23}{2.7+L_0}$
20	$\frac{\sigma \times 26.8}{2.9+L_0}$
25	$\frac{\sigma \times 44}{3.4+L_0}$
32	$\frac{\sigma \times 88.2}{4.2+L_0}$
40	$\frac{\sigma \times 167.8}{5.1+L_0}$

RMT

2. About shock absorber
2.1) Shock absorbers are consumable parts. When a decrease in energy absorption capacity is noticed, it must be replaced. Refer to the table below for shock absorber type.
2.2) Never loosen the bottom screw of the shock absorber. (It is not an adjustment screw.) That may cause oil leakage.
2.3) Refer to the table below for tightening torques of the shock absorber setting nut.

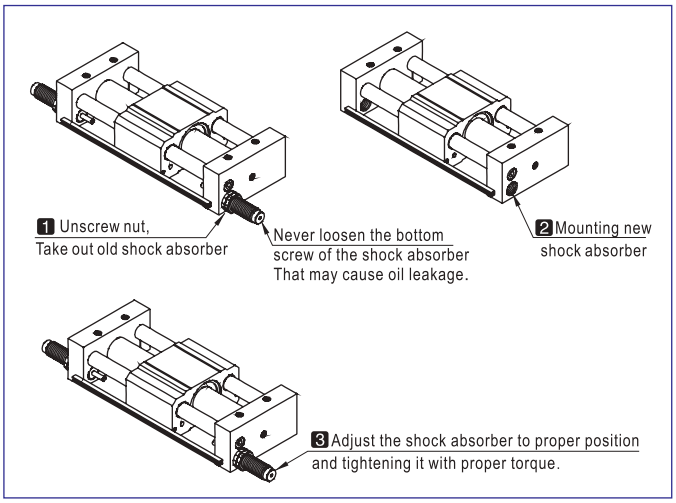

Cylinder model	RMT16	RMT20	RMT25	RMT32	RMT40
Shock absorber type	ACA1006–A	ACA1007–1N	ACA1412–1N	ACA2020–1N	ACA2020–1N
Tightening torque(Nm)	1.67	1.67	3.14	10.80	10.80

3. About sensor switch
3.1) Sensor switch only can be used for the cylinder with magnet . The magnet located the four corner of body's(refer below) .The cylinder with magnet have both group mounting hole for mounting rail. please refer to below for ordering sensor switch, mounting it into the rsil's groove, adjusting it to proper position, tightening it with proper torque.

Cylinder model	RMT16	RMT20	RMT25	RMT32	RMT40
Sensor switch	CS1-G, CS1–GX, DS1–G, DS1–GN, DS1–GP				

RMT

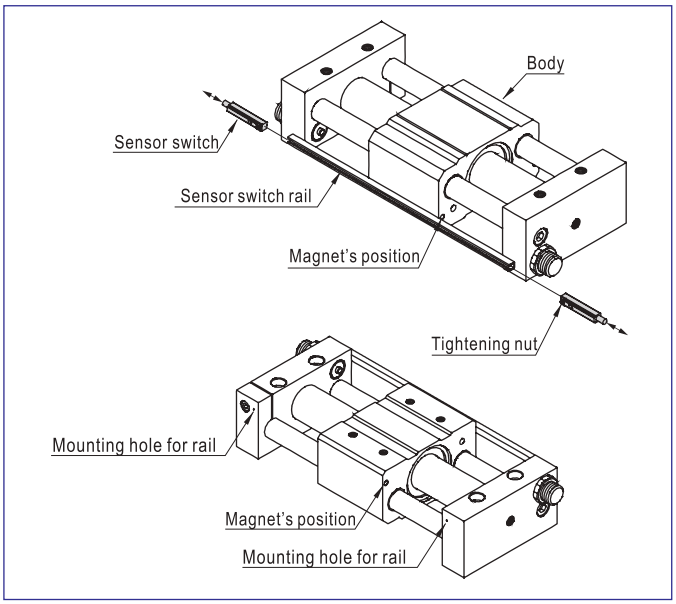

Add) Refer to Page 387, 396 for detail of sensor switch.

Inner structure and material of major parts

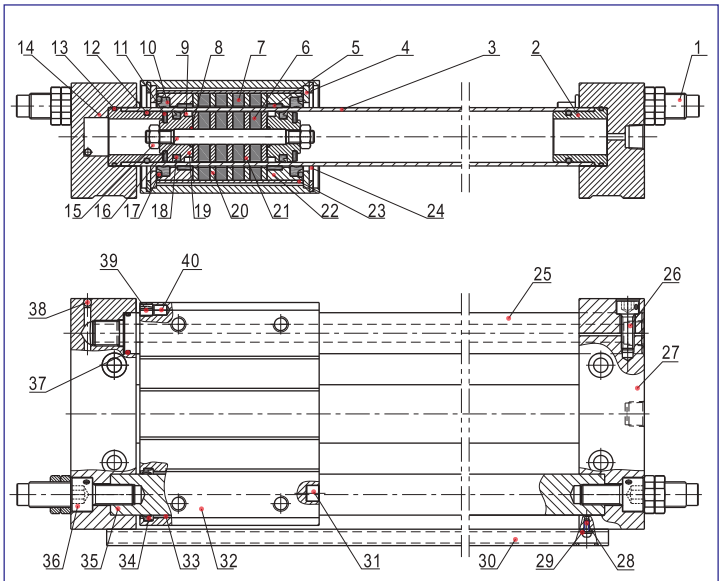

NO.	Item	Material	NO.	Item	Material
1	Shock absorber	Combination	21	Magnet washer	Carbon steel
2	Washer cover	Aluminum alloy	22	End cover	Aluminum alloy
3	Stainless steel barrel	Stainless steel	23	Mobility iron	Aluminum alloy
4	Washer	Carbon steel	24	C clip	Spring steel
5	Wearing ring	Wear resistant material	25	Guide I	Carbon steel
6	Magnet	Rare-earth material	26	Countersink screw	Carbon steel
7	Magnet	Rare-earth material	27	Fixing plate	Aluminum alloy
8	O–ring	NBR	28	Screw	Carbon steel
9	Wear ring	Wear resistant material	29	Spring washer	Spring steel
10	Scraping dust ring	Plastics	30	Rail	Aluminum alloy
11	Bumper	NBR	31	Bumper block	Stainless steel
12	O–ring	NBR	32	Barrel	Aluminum alloy
13	O–ring	NBR	33	Bushing	Bronze+Fill lubricant
14	Fixing plate	Aluminum alloy	34	Gasket	TPU
15	Nut	SS41	35	Guide II	Carbon steel
16	Joint pole	Stainless steel	36	Countersink screw	Carbon steel
17	O–ring	NBR	37	O–ring	NBR
18	Piston seal	TPU	38	Steel ball	Stainless steel
19	Magnet	Aluminum alloy	39	Magnet	Rare-earth material
20	Magnet washer	Carbon steel	40	Location washer	NBR

Dimensions

RMT–A

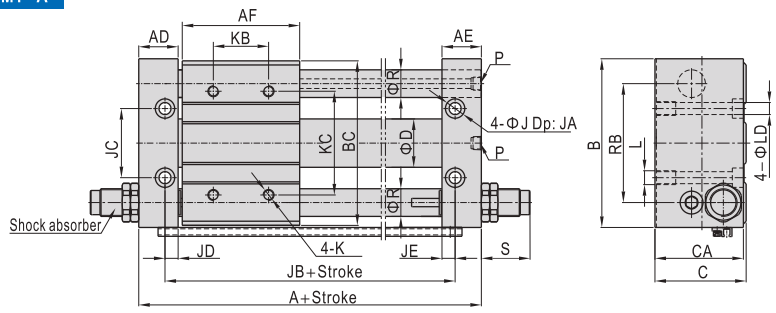

RMT

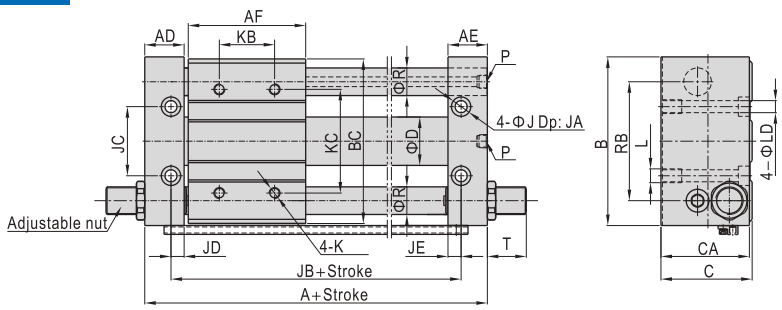

Bore size\Item	A	AD	AE	AF	B	BC	C	CA	D	J	JA	JB	JC	JD	JE
16	107	22.5	22.5	60	75	72	40	39	18	9.5	5	75	30	6.5	6.5
20	124	25.5	25.5	70	90	87	46	45	22.8	9.5	5	90	38	8.5	8.5
25	124	25.5	25.5	70	100	97	54	53	27.8	11	6.5	90	42	8.5	8.5
32	148	28.5	28.5	85	122	119	66	64	35	14	8	110	50	9.5	9.5
40	170	35.5	35.5	95	145	142	76	74	43	14	8	120	64	10.5	10.5

Bore size\Item	K	KB	KC	L	LD	P	R	RB	S	T
16	M5 × 0.8 Dp: 10	30	50	M6 × 1.0 Dp: 9.5	5.5	M5 × 0.8	12	52	15.5	8.5
20	M6 × 1.0 Dp: 10	40	70	M6 × 1.0 Dp: 9.5	5.5	1/8"	16	63	22.5	10.5
25	M6 × 1.0 Dp: 10	40	70	M8 × 1.25 Dp: 10	7	1/8"	16	70	40.5	11.5
32	M8 × 1.25 Dp: 12	40	75	M10 × 1.5 Dp: 15	8.5	1/8"	20	86	57.5	17.5
40	M8 × 1.25 Dp: 12	65	105	M10 × 1.5 Dp: 15	8.5	1/4"	25	105	50.5	10.5

Product series

HRQ Series	Acting type	Bore size	Collocation of sensor switch DS1-H
Mini Rotary Cylinder	Double acting	2 3 7	
Middle-sized Rotary Cylinder	Double acting	10 20 30 50	
Large-sized Rotary Cylinder	Double acting	70 100 200	
Page 312			381

Installation and application

1. Dirty substances in the pipe must be eliminated before cylinder is connected with pipeline to prevent the entrance of impurities into the cylinder.
2. The medium used by cylinder shall be filtered to 40 μ m or below.
3. Anti–freezing measure shall be adopted under low temperature environment to prevent moisture freezing.
4. If the cylinder is dismantled and stored for a long time, pay attention to conduct anti–rust treatment to the surface. Anti–dust caps shall be added in air inlet and outlet ports.

Specification

Specification		2	3	7	10	20	30	50	70	100	200
Acting type		Double rack and pinion(Double acting)									
Fluid		Air(to be filtered by 40 μ m filter element)									
Operating pressure	With adjustment bolt	0.1~0.7MPa(15~100psi)(1.0~7.0bar)			0.1~1.0MPa(15~145psi)(1.0~10.0bar)						
	With internal shock absorber	–			0.1~0.6MPa(15~87psi)(1.0~6.0bar)						
Proof pressure		1.5MPa(218psi)(15.0bar)									
Temperature ℃		0~60									
Angle adjustment range		0~190°							0~190°		
Repeatable precision	With adjustment bolt	0.2°									
	With internal shock absorber	–			0.05°						
Theoretic moment (Nm)(0.5MPa)		0.2	0.33	0.63	1.1	2.2	2.8	5	7.5	11	22
Cushion type	With adjustment bolt	Rubber bumper									
	With internal shock absorber	–			Shock absorber						
Port size	End ports	M5 × 0.8							1/8" ①		
	Side ports								M5 × 0.8		
Weight g		120	175	270	535	940	1260	2060	2890	4100	7650

① G thread and NPT thread are available.

Add) HRQ series are all attached with magnet, please refer to Page 381~402 for the specific content of sensor switch.

Symbol

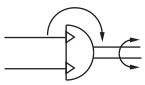

Product feature

1. Rack and pinion design, stable functioning.
2. Double cylinder structure, double output could be achieved.
3. The manufacturing precision of working platform is high, and is easy for installation , and is of precise orientation.
4. The center of working platform has a through hole, and pipe can be located and passed through this hole;
5. Guide hole is designed on the both side of the cylinder body (10~200) or undersurface (2~7), which is simply to install.
6. Two modes of buffer could be chosen, adjustment bolt buffer and internal shock absorber, the maximum buffer energy of internal shock absorber is 3-5 times that of adjustment bolt buffer.

Actual torque output

Applicable type: HRQ2, HRQ3, HRQ7

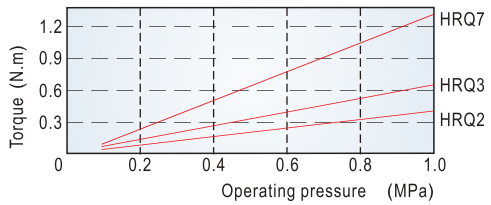

Applicable type: HRQ10, HRQ20, HRQ30, HRQ50

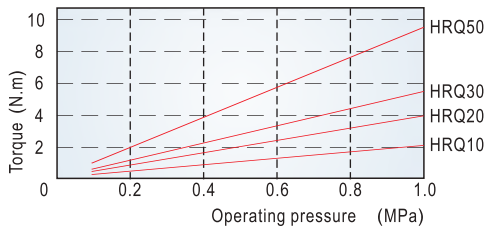

Applicable type: HRQ70, HRQ100, HRQ200

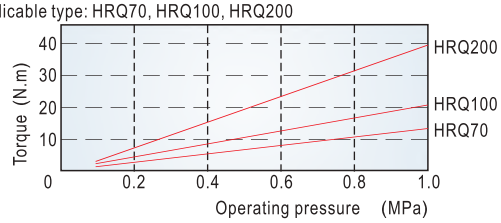

Maximum allowed movement energy and rotation times

Model	Maximal allowed energy (J)		Rotation times (s/90°)	
	With adjustment bolt	With internal shock absorber	With adjustment bolt	With internal shock absorber
HRQ2	0.0015	–	0.2~0.7	–
HRQ3	0.002	–	0.2~0.7	–
HRQ7	0.006	–	0.2~1.0	–
HRQ10	0.01	0.04	0.2~1.0	0.2~0.7
HRQ20	0.025	0.12	0.2~1.0	0.2~0.7
HRQ30	0.05	0.12	0.2~1.0	0.2~0.7
HRQ50	0.08	0.30	0.2~1.0	0.2~0.7
HRQ70	0.24	1.1	0.2~1.5	0.2~1.0
HRQ100	0.32	1.6	0.2~2.0	0.2~1.0
HRQ200	0.56	2.9	0.2~2.5	0.2~1.0

Note) ①:The movement energy should not exceed the allowed maximum energy, or the inner accessories of product would be damaged;
②:When the rotation times of with shock absorber is larger than the allowed tolerance, the bigger effect will be lost.

Ordering code

HRQ 20 A G

Model
HRQ: Rotary Table/Rack & Pinion Style

Specification
2 3 7 10 20 30 50 70 100 200

Thread type ①

G: G
T: NPT

Cushion type

Specification	Cushion type
2 3 7	Blank: With adjustment bolt
10 20 30 50 70 100 200	Blank: With adjustment bolt A: With internal shock absorber

Note ①: When it is 2,3,7,10,20 specification, thread type is M5, it is blank here.
Add) HRQ series are all atteched with magnet.

Maximum allowed loading

	Loading type	Model									
		HRQ2	HRQ3	HRQ7	HRQ10	HRQ20	HRQ30	HRQ50	HRQ70	HRQ100	HRQ200
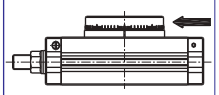	Maximum allowed radial loading (N)	18	30	50	80	150	200	300	330	390	540
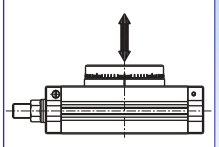	Maximum allowed axial loading (N)	35	50	70	80	150	200	300	300	500	740
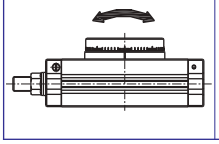	Maximum allowed bending moment (Nm)	0.8	1.1	1.5	2.5	4.0	5.5	10.0	12.0	18.0	25.0

Inner structure and material of major parts

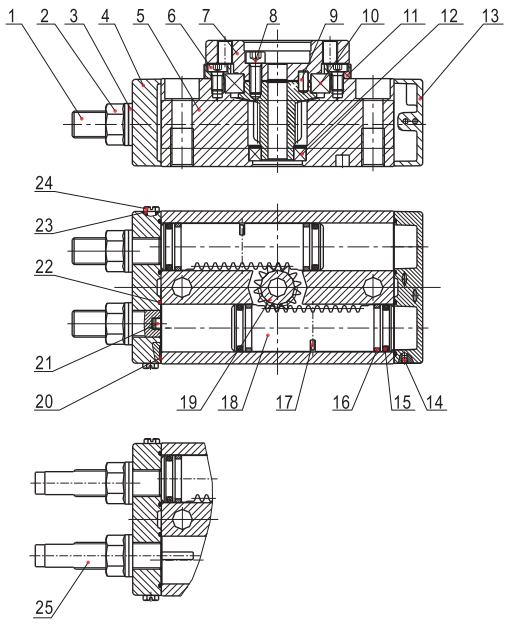

HRQ□–A(With internal shock absorber)

NO.	Item	Material
1	Adjustment bole	Carbon steel
2	Hexagon nut	Carbon steel
3	Seal washer	Carbon steel & Rubber
4	Front cover	Aluminum alloy
5	Body	Aluminum alloy
6	Hexagon socket head set bole	Carbon steel
7	Table	Aluminum alloy
8	Hexagon socket head set bole	Carbon steel
9	Guide pin/flat key	Carbon steel
10	Deep-groove bearing	Subassembly
11	Bearing retainer	Aluminum alloy
12	Deep-groove bearing/Needle bearing	Subassembly
13	Back cover	Aluminum alloy
14	Steel ball	Stainless steel
15	Piston seal	NBR
16	Wear ring	Wear resistant material
17	Magnet	Rare earths
18	Rack	Stainless steel/Carbon steel
19	Pinion	Chrome molybdenum steel
20	O–ring	NBR
21	Bumper	NBR
22	O–ring	NBR
23	O–ring	NBR
24	Hexagon screw	Stainless steel
25	Shock absorber	Subassembly

Dimensions

HRQ2,3,7

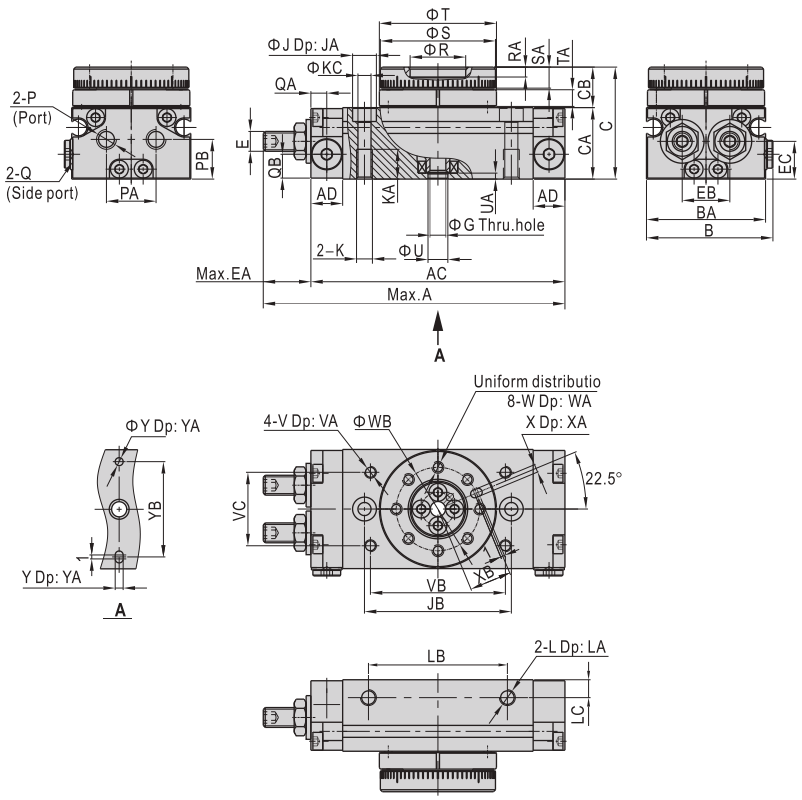

Type\Item	A	AC	AD	B	BA	C	CA	CB	E	EA	EB	EC	G
2	76	64	8	32	30	28	18	10	M5 × 0.8	12	12	9.5	4
3	82	70	8	36.5	34.5	30.5	20.5	10	M5 × 0.8	12	15.5	10.5	5
7	94.5	79.5	8	43	41	34.5	23	11.5	M6 × 1.0	15	18.5	12	6

Type\Item	J	JA	JB	K	KA	KC	L	LA	LB	LC	P	PA
2	6	3.5	37	M4 × 0.7	7.5	3.5	M4 × 0.7	4	35	4.5	M5 × 0.8	12.5
3	7.5	4.5	43	M5 × 0.8	8.5	4.5	M4 × 0.7	4	40	4.5	M5 × 0.8	15.5
7	7.5	4.5	50	M5 × 0.8	8.5	4.5	M5 × 0.8	5	50	5	M5 × 0.8	18.5

Type\Item	PB	Q	QA	QB	R	RA	S	SA	T	TA	U	UA
2	10	M5 × 0.8	4	6	14(H9)	2.5	29(h9)	5.5	29.5(h9)	4	5(H9)	1.5
3	12	M5 × 0.8	4	7.5	17(H9)	2.5	33(h9)	5.5	34(h9)	4	6(H9)	1.5
7	14	M5 × 0.8	4	9	20(H9)	3	39(h9)	6.5	40(h9)	4.5	7(H9)	1.5

Type\Item	V	VA	VB	VC	W	WA	WB	X	XA	XB	Y	YA	YB
2	M3 × 0.5	3.5	34	18.5	M3 × 0.5	5.5	21	2(H9)	2	10.5	2(H9)	2	24
3	M3 × 0.5	3.5	38	23	M3 × 0.5	5.5	25	2(H9)	2	12.5	2(H9)	2	28
7	M4 × 0.7	4.5	45	30	M4 × 0.7	6.5	29	3(H9)	3	14.5	3(H9)	3	32

HRQ10~50

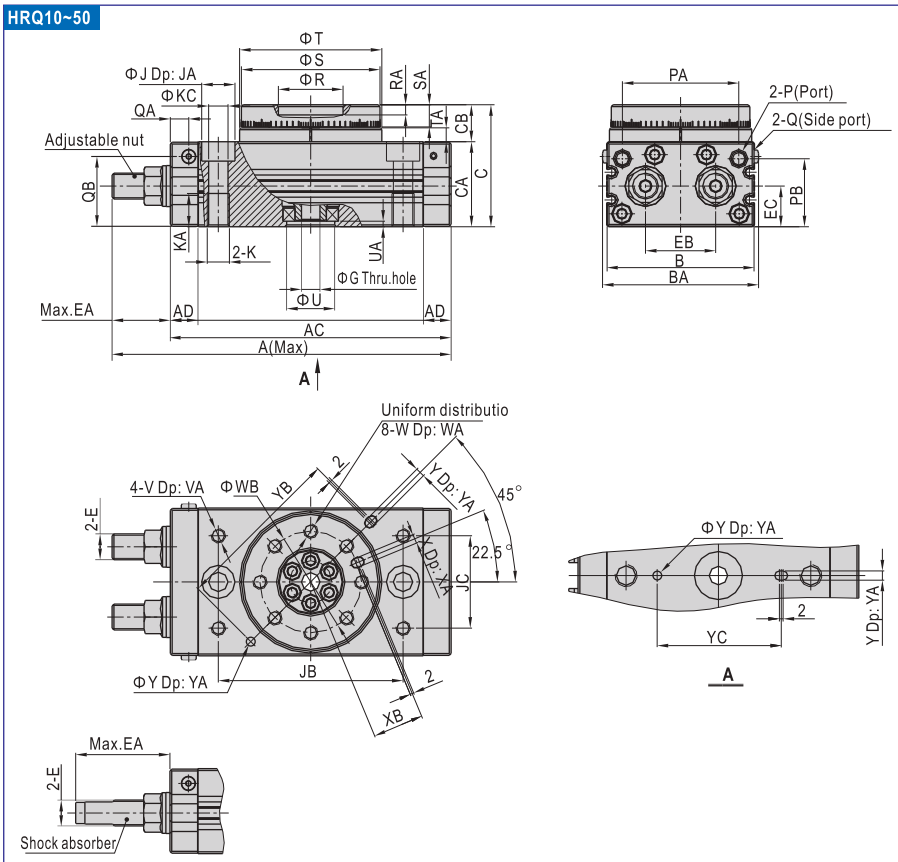

HRQ□–A(With internal shock absorber)

Type\Item	A(With internal shock absorber)	A(With internal Adjustable nut)	AC	AD	B	BA	C	CA	CB	E
10	120.5	109.5	92	9.5	50	54	47	34	13	M10 × 1.0
20	156	143	117	11	65	69	54	37	17	M12 × 1.0
30	165.5	152.5	127	11.5	70	74	57	40	17	M12 × 1.0
50	203	183.5	152	15	80	84	66	46	20	M14 × 1.5

Type\Item	EA(With internal shock absorber)	EA(With internal Adjustable nut)	EB	EC	G	J	JA	JB	JC
10	28.5	17.5	20.5	15.5	5	11	6.5	60	27
20	39	26	27.5	16	9	14	8.5	76	34
30	38.5	25.5	29	18.5	9	14	8.5	84	37
50	51	31.5	38	22	10	18	10.5	100	50

Type\Item	K	KA	KC	P	PA	PB	Q	QA	QB	R	RA	S	SA	T
10	M8 × 1.25	12	6.5	M5 × 0.8	34.5	28	M5 × 0.8	4.5	29	20(H9)	4.5	45(h9)	8	46(h9)
20	M10 × 1.5	15	8.5	M5 × 0.8	47	30	M5 × 0.8	6	30	28(H9)	6.5	60(h9)	10	61(h9)
30	M10 × 1.5	15	8.5	1/8"	50	32	M5 × 0.8	6.5	34	32(H9)	5	65(h9)	10	67(h9)
50	M12 × 1.75	18	10.5	1/8"	63	38	M5 × 0.8	10	38	35(H9)	5.5	75(h9)	12	77(h9)

Type\Item	TA	U	UA	V	VA	W	WA	WB	X	XA	XB	Y	YA	YB	YC
10	4.5	15(H9)	3	M5 × 0.8	8	M5 × 0.8	8	32	3(H9)	3.5	16	3(H9)	3.5	56	40
20	6.5	17(H9)	2.5	M6 × 1.0	8	M6 × 1.0	10	43	4(H9)	4.5	21.5	4(H9)	4.5	74	50
30	6.5	22(H9)	3	M6 × 1.0	8	M6 × 1.0	10	48	4(H9)	5	24	4(H9)	4.5	80	58
50	7.5	26(H9)	3	M8 × 1.25	8	M8 × 1.25	12	55	5(H9)	6	27.5	5(H9)	5.5	92	68

HRQ70~200

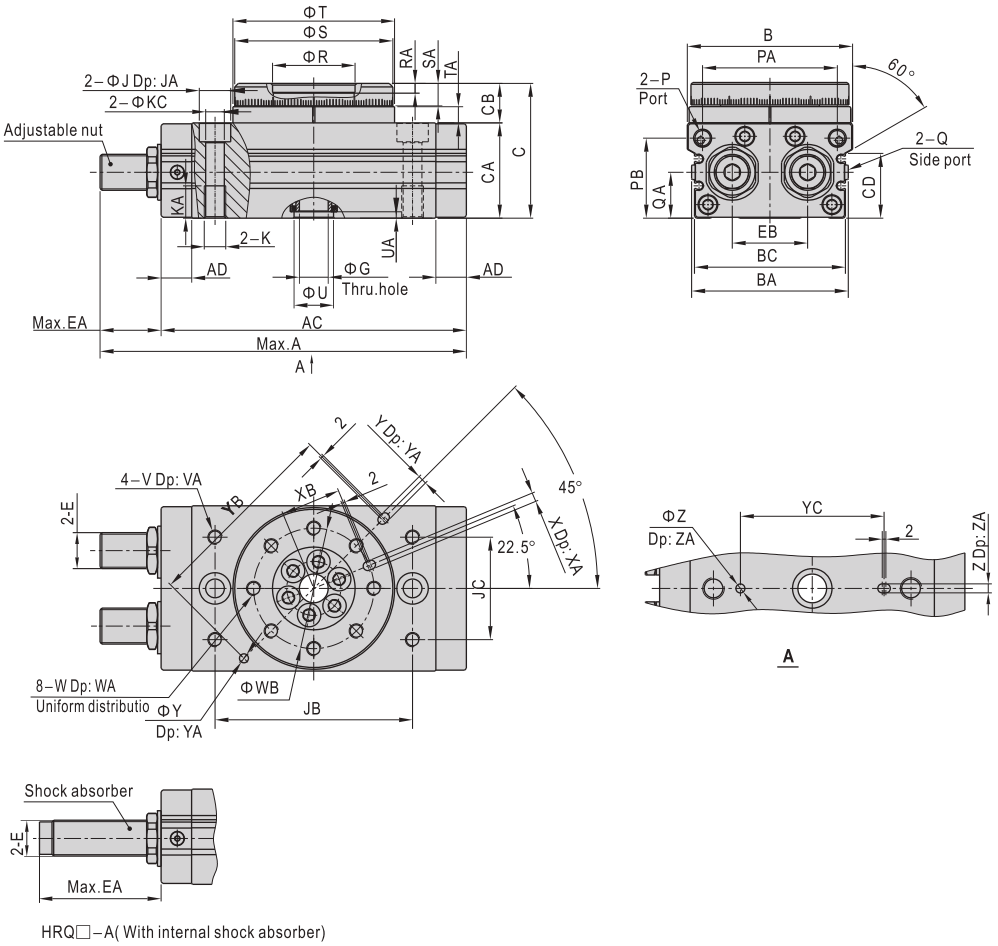

HRQ☐–A(With internal shock absorber)

Type\Item	A(With internal Adjustable nut)	A(With internal shock absorber)	AC	AD	B	BA	BC	C	CA	CB	CD
70	204	238	170	17	92	88	84	75	53	22	36
100	223	257	189	17	102	99	95	86	59	27	42
200	276.5	314.5	240	24	120	117	113	106	74	32	57

Type\Item	E	EA(With internal Adjustable nut)	EA(With internal shock absorber)	EB	G	J	JA	JB	JC	K
70	M20 × 1.5	34	68	42	16	17.5	10.5	110	57	M12 × 1.75
100	M20 × 1.5	34	68	50	19	17.5	10.5	130	66	M12 × 1.75
200	M27 × 1.5	36.5	74.5	60	24	20	12.5	150	80	M16 × 2.0

Type\Item	KA	KC	P	PA	PB	Q	QA	R	RA	S	SA	T	TA	U	UA	V	VA
70	18	10.5	1/8"	75	44.5	M5 × 0.8	25.5	46(h9)	5	88(h9)	12.5	90(h9)	9	22(H9)	3.5	M8 × 1.25	10
100	18	10.5	1/8"	85	50.5	M5 × 0.8	29.5	56(h9)	6	98(h9)	14.5	100(h9)	12	24(H9)	3.5	M8 × 1.25	10
200	25	14	1/8"	103	63	M5 × 0.8	36.5	64(h9)	9	116(h9)	16.5	118(h9)	15	32(H9)	5.5	M12 × 1.75	13

Type\Item	W	WA	WB	X	XA	XB	Y	YA	YB	YC	Z	ZA
70	M8 × 1.25	12.5	67	5(H9)	5.5	33.5	5(H9)	3.5	110	80	5(H9)	3.5
100	M10 × 1.5	14.5	77	6(H9)	6.5	38.5	6(H9)	4.5	120	100	6(H9)	4.5
200	M12 × 1.75	16.5	90	8(H9)	8.5	45	8(H9)	4.5	140	110	8(H9)	6.5

How to select product

1. Determine the following working conditions according to the actual situation:

1.1) Rotation angle θ: The actual rotation angle must be within the maximum allowed range of rotation angle of cylinder.

1.2) Rotation time t: The rotation time must be within the maximum allowed range of rotation time of cylinder.

1.3) Installation position of cylinder: Allow enough installation space, so as to ensure leaving adequate space for rotation of cylinder and workpieces.

1.4) Determination of loading mass and loading shape.

2. Calculation of necessary forgue needed when loading rotation (T(N.m):

Calculate the necessary moment required for loading rotation according to the formula below, and combine with the forgue diagram of actual effect, to choose pneumatic cylinder with suitable forgue output.

$T=K\times I\times \dot{\omega}$ $\dot{\omega}=\frac{2\theta}{t^2}$	T:Necessary forgue required for loading rotation (N.m) K:Coefficient of allowance, K is defined as 5 I:Moment of inertia（kg.m²） $\dot{\omega}$:Angular acceleration（rad/s²） θ :Rotation Angle（rad） t:Rotation time（s）

2.1、Calculation method of moment of inertia in different conditions

Diagram	Description	Calculation formula of moment of inertia	Rotation radius
Disk 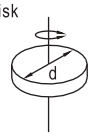	d:Diameter (m) m:Mass (kg)	$I=\frac{md^2}{8}$	$\frac{d^2}{8}$
		Note: no special installation direction	
Classified disk 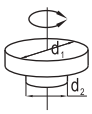	d_1:Diameter(m) d_2:Diameter(m) m_1:d_1 Mass(kg) m_2:d_2 Mass(kg)	$I=\frac{m_1d_1^2+m_2d_2^2}{8}$	$\frac{d_1^2+d_2^2}{8}$
		Note: compare d_1 with d_2, disregard d_1 if d_1 is extremely tiny	
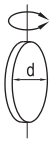	d:Diameter (m) m:Mass (kg)	$I=\frac{md^2}{16}$	$\frac{d^2}{16}$
		Note: no special installation direction	
Sphere 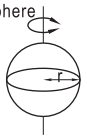	r:Radius(m) m:Mass(kg)	$I=\frac{2mr^2}{5}$	$\frac{2r^2}{5}$
		Note: no special installation direction	
Thin-stick 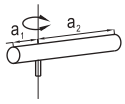	a_1:Length of stick(m) a_2:Length of stick(m) m_1:a_1 Mass(kg) m_2:a_2Mass(kg)	$I=\frac{m_1a_1^2+m_2a_2^2}{3}$	$\frac{a_1^2+a_2^2}{3}$
		Note: 1. horizontal installation. 2. pay attention to the change of movement time when vertical installation.	
Rectangle sheet 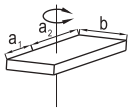	a_1:Sheet length (m) a_2:Sheet length (m) b: Length of side(m) m_1:a_1 Mass(kg) m_2:a_2 Mass(kg)	$I=\frac{m_1(4a_1^2+b^2)+m_2(4a_2^2+b^2)}{12}$	$\frac{2a_1^2+2a_2^2+b^2}{6}$
		Note: 1. horizontal installation. 2. pay attention to the change of movement time when vertical installation.	
Rectangle sheet 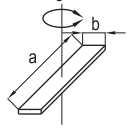	a:Sheet length (m) b:Length of side(m) m:Mass(kg)	$I=\frac{m(a^2+b^2)}{12}$	$\frac{a^2+b^2}{12}$
		Note: no special installation direction	

Diagram	Description	Calculation formula of moment of inertia	Rotation radius
Rectangle sheet 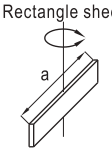	a:Sheet ength (m) m:Mass (kg)	$I=\frac{ma^2}{12}$	$\frac{a^2}{12}$
		Note: no special installation direction	
Rectangle sheet 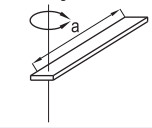	a:Sheet ength (m) m:Mass(kg)	$I=\frac{ma^2}{3}$	$\frac{a^2}{3}$
		Note: 1. horizontal installation. 2. pay attention to the change of movement time when vertical installation.	
Rectangle sheet 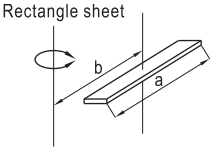	a:Sheet length (m) b:Distance between the rotation axis and the gravity center of loading (m) m:Mass(kg)	$I=\frac{ma^2}{12}+mb^2$	$\frac{a^2}{12}+b^2$
		Note: the cuboids are same too.	
Concentrated load 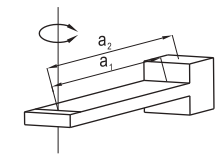	a_1:Vertical distance between the rotation axis and the concentrated loading(m) a_2:Length of arm(m) m_1:Mass of concentrated loading(kg) m_2:Mass of arm(kg)	$I=m_1a_1^2+\frac{m_2a_2^2}{3}+m_1K$	
		Note: 1. horizontal installation. 2. compared with m, disregard if m is extremely tiny. 3. calculate K according to the shape of concentrated loading row by row. For example, when the loading is spheroid, $K=\frac{2r^2}{5}$	
Gear 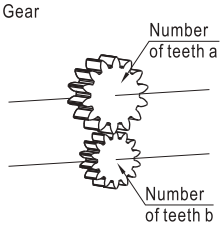	a:Tooth number of gear b:Tooth number of loading gear	$I_a=(\frac{a}{b})^2I_b$	

3. Calculation of maximum movement energy E_{max}(J):

Calculate the maximum movement energy E_{max} according to the formula below, and make sure that the maximum movement energy is within allowed energy range of the chosen pneumatic cylinder, excessive large movement energy would lead to damage of inner parts, please choose rotation cylinder attached with shock absorber when the movement energy is fairly large.

$E_{max}=\frac{1}{2}I\omega^2_{max}$ $\omega_{max}=\frac{2\theta}{t}$ ω_{max}: Maximal angular velocity(rad/s)

4. Calculation of loading rate

Calculate the loading rate according to the formula below, and the loading rate must not be more than 1.

$$\text{Loading rate}=\frac{W_s}{\text{Maximal allowed axial loading}}+\frac{W_r}{\text{Maximal allowed radial loading}}+\frac{M}{\text{Maximal allowed bending moment of working platform}}\leqslant 1$$

W_s: Actual axial loading W_r: Actual radial loading M: Actual loaded bending moment of working platform

5. Determination method

It could be used only when the chosen pneumatic cylinder must meet the requirements of article 2, 3 and 4 simultaneously.

Installation and application

1. Rotation Direction and Rotation Angle

1.1) Rotation Direction

HRQ2\3\7

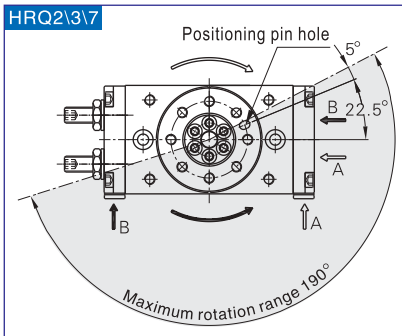

HRQ10~200

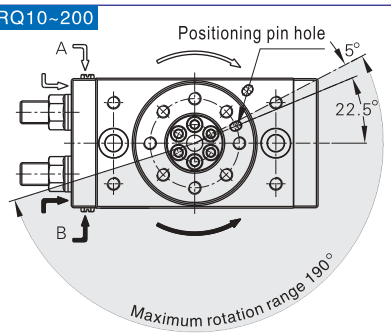

A) By adjusting the adjustment bolt, the rotation end can be set within the range shown in the up drawing: Maximum ratation is 190° ;

B) The rotary table turns in the clockwise direction when the A port is pressurized, and in the counter–clockwise direction when the B port is pressurized.

1.2) Rotation Range Example(90° Rotation)

HRQ2\3\7

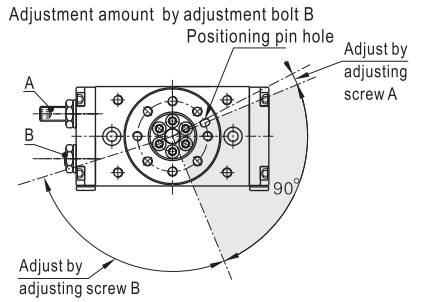

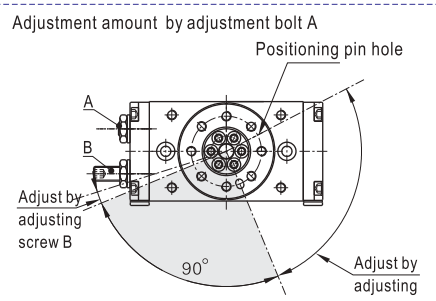

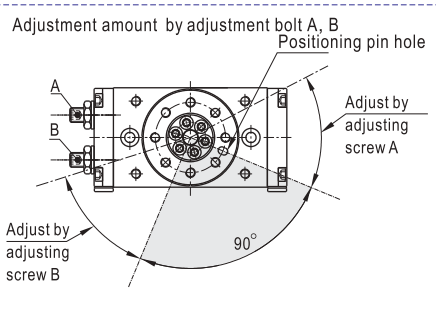

HRQ10~200

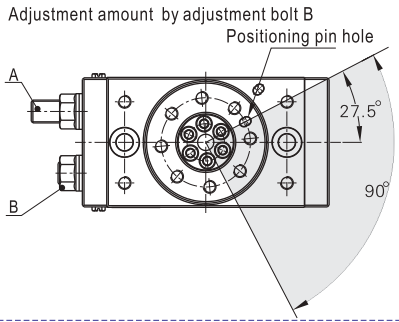

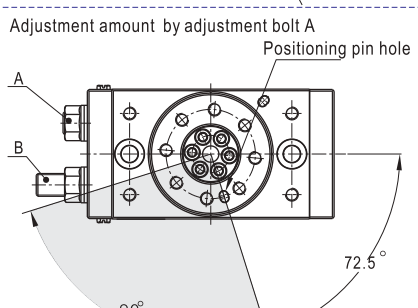

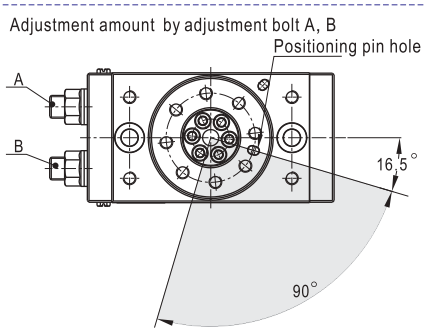

1.3) The rotation angle can also be set on a type with internal absorber.

Model	Adjustment angle per rotation of angle (adjustment screw)	Model	Adjustment angle per rotation of angle (adjustment screw or shock absorber)
HRQ2	11.5°	HRQ10	10.2°
HRQ3	10.9°	HRQ20	6.5°
HRQ7	10.2°	HRQ30	6.5°
		HRQ50	8.2°
		HRQ70	7.0°
		HRQ100	6.1°
		HRQ200	4.9°

2. The range of rotation angle has been adjusted to the maximum in the factory, please do not enlarge the rotation angle any more.
3. The movement energy should not exceed the allowed maximum energy, or the inner parts will be damaged.
4. The rotary parts need no lubrication.
5. Series HRQ is equipped with a rubber bumper or shock absorber. Therefore, perform rotation adjustment in the pressurized condition(minimum operation pressure: 0.1 Mpa or more for adjustment bolt and internal shock absorber types, and 0.2 MPa or more for external shock absorber type.)
6. Refer to the table below for tightening torques of the shock absorber setting nut.

Shock absorber size	Max. tightening torque(Nm)
M10	3.5
M12	8.0
M14	11.0
M20	24.0
M27	63.0

7. Never loosen the bottom screw of the shock absorber. (It is not an adjustment screw.) That may cause oil leakage.
8. Shock absorbers are consumable parts. When a decrease in energy absorption capacity is noticed, it must be replaced.

Rotary table cylinder	Shock absorber
HRQ10	ACA1006-A
HRQ20\HRQ30	ACA1209-A
HRQ50	ACA1412-A
HRQ70\HRQ100	ACA2020-A
HRQ200	ACA2725-A

9. Strictly control runout and parallelism of the dial according to the requirements of the following table.

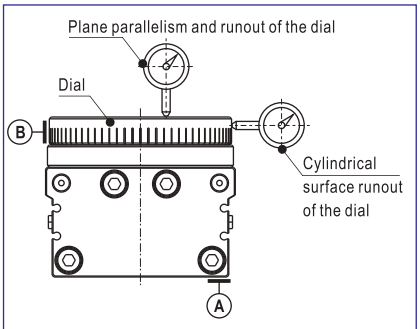

Items	Specific requirements	Relative datum
Plane parallelism of the dial	0.1	A
Plane runout of the dial	0.1	A
Cylindrical surface runout of the dial	0.1	A

Product series

HFZ Series	HFP Series	HFY Series	HFR Series	HFC Series	Acting type	Bore size	Collocation of sensor switch CS1-G	DS1-G	DS1-H
					Double acting / Single acting	6			●
						10	●	●	●
						16	●	●	●
						20	●	●	●
						25	●	●	●
						32	●	●	●
						40	●	●	
					Double acting	10			
						16	●	●	
						20	●	●	
						25	●	●	
						32	●	●	●
					Double acting / Single acting	6			●
						10	●	●	●
						16	●	●	●
						20	●	●	●
						25	●	●	●
						32	●	●	●
					Double acting	10			●
						16	●	●	●
						20	●	●	●
						25	●	●	●
						32	●	●	●
					Double acting	16			●
						20	●	●	●
						25	●	●	●
						32	●	●	●
						40	●	●	●
						50	●	●	●
						63	●	●	●
Page	320	326	330	333	335			381	

Installation and application

1. Dirty substances in the pipe must be eliminated before air gripper is connected with pipeline to prevent the entrance of impurities into the cylinder.
2. The medium used by cylinder shall be filtered to 40 μ m or below.
3. Anti–freezing measure shall be adopted under low temperature environment to prevent moisture freezing.
4. If the air gripper is dismantled and stored for a long time, pay attention to conduct anti–rust treatment to the surface. Anti–dust caps shall be added in air inlet and outlet ports.

Specification

Bore size (mm)			6	10	16	20	25	32	40
Acting type			Double acting Single acting						
Fluid			Air(to be filtered by 40 μ m filter element)						
Operating pressure	Double acting	Φ6, Φ10	0.2~0.7MPa(28~100psi)(2.0~7.0bar)						
		Others	0.15~0.7MPa(22~100psi)(1.5~7.0bar)						
	Single acting	Φ6, Φ10	0.35~0.7MPa(50~100psi)(3.5~7.0bar)						
		Others	0.25~0.7MPa(36~100psi)(2.5~7.0bar)						
Temperature ℃			-20~70						
Lubrication			Not required						
Repeatability mm			± 0.01					± 0.02	
Max. frequency			180(c.p.m)					60(c.p.m)	
Sensor switches ①			DS1-H	CS1-G DS1-G	CS1-G, DS1-G, DS1-H				
Port size			M3 × 0.5		M5 × 0.8				

① Sensor switch should be ordered additionally, please refer to P381~402 for detail of sensor switch.

Symbol

HFZ: Double acting

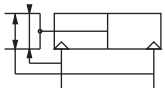

HFTZ: Single acting and normally opened

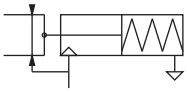

HFSZ: Single acting and normally closed

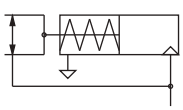

Product feature

1. Integrated design of linear guide rail, high rigidity and high precision.
2. A positioning pin is attached to the bottom of the linear guide rail, which can prevent the deviation of the positioning rail and body.
3. The hole of the body is deeper, which can improve the precision and the consistency of repeated dismounting and positioning.
4. According to the actual using requirements of customers, the initial position of clamping jaw can be customized to meet the different needs under different working conditions.

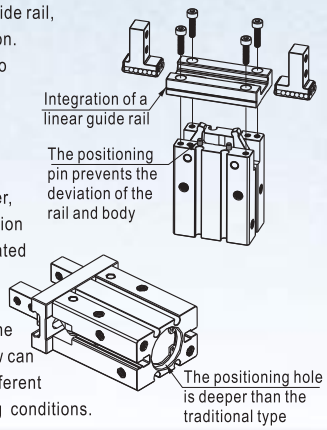

Ordering code

HFZ 20 □

Model

HFZ: Air finger(Double acting)
HFSZ: Air finger(Single acting and nrmally closed)
HFTZ: Air finger(Single acting and normally opened)

Bore size

6: Φ6mm
10: Φ10mm
16: Φ16mm
20: Φ20mm
25: Φ25mm
32: Φ32mm
40: Φ40mm

Finger type

Blank:Standard

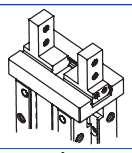

R:Narrow type

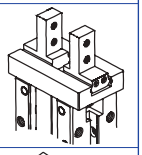

B:Side mounting type

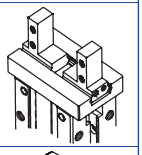

W:Side mounting and narrow type

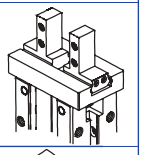

N:Thru.hole mounting type

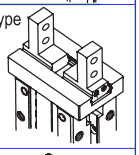

M:Thru.hole mounting and narrow type

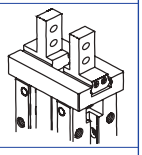

F:Bottom mounting type

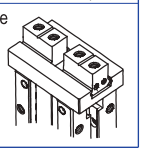

① Φ6, Φ32, Φ40 bore size don't have R, W & M type. Add) HFZ series are all attached with magnet.

HFZ

Inner structure and material of major parts

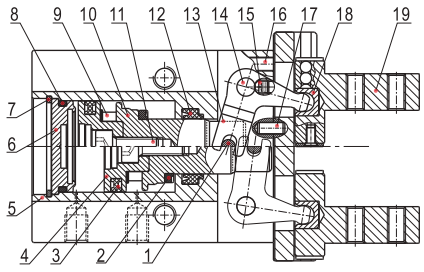

NO.	Item	Material
1	Pin	Stainless steel
2	Bumper	TPU
3	Piston seal	NBR
4	Piston	Aluminum alloy/Stainless steel
5	Body	Aluminum alloy
6	Back cover	Aluminum alloy
7	C clip	Spring steel
8	O-ring	NBR
9	Magnet	Sintered metal(Neodymium-iron-boron)
10	Piston rod	Aluminum alloy/Stainless steel
11	Screw	Carbon steel
12	Rod packing	NBR
13	Curved bar	Stainless steel
14	Pin	Stainless steel
15	Countersink screw	Carbon steel
16	Hexagon screw	Carbon steel
17	Pin	Stainless steel
18	Guide sleeve	Stainless steel
19	Assembly of clamping jaw and guide rail	Stainless steel

Gripping force and stroke

Acting		Model	Gripping force per finger Effective valve(N)		Opening/Closing stroke (Both sides)(mm)	Weight (g)	
			External	Internal		F Type	Others
Double acting		HFZ6	3.3	6.1	4	24	25
		HFZ10	11	17	4	56	56
		HFZ16	34	45	6	124	124
		HFZ20	45	68	10	236	236
		HFZ25	69	102	14	418	428
		HFZ32	160	195	22	750	729
		HFZ40	255	320	30	1340	1268
Single acting	Normally opened	HFTZ6	1.9	-	4	25	26
		HFTZ10	7	-	4	57	57
		HFTZ16	27	-	6	125	125
		HFTZ20	35	-	10	238	238
		HFTZ25	55	-	14	420	430
		HFTZ32	133	-	22	799	778
		HFTZ40	220	-	30	1437	1365
	Normally closed	HFSZ6	-	3.7	4	25	26
		HFSZ10	-	13	4	57	57
		HFSZ16	-	38	6	125	125
		HFSZ20	-	59	10	238	238
		HFSZ25	-	87	14	420	430
		HFSZ32	-	163	22	799	778
		HFSZ40	-	270	30	1437	1365

Note) The gripping force in the above table is in the working pressure of 0.5MPa, and with a gripping point of L=20mm.
Add) Please refer to page 323 for the definition of "L".

Dimensions

Standard type

Φ6

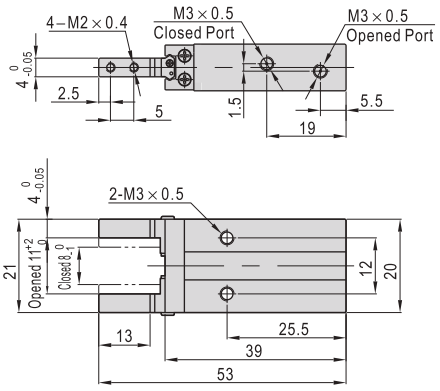

Φ10~Φ40

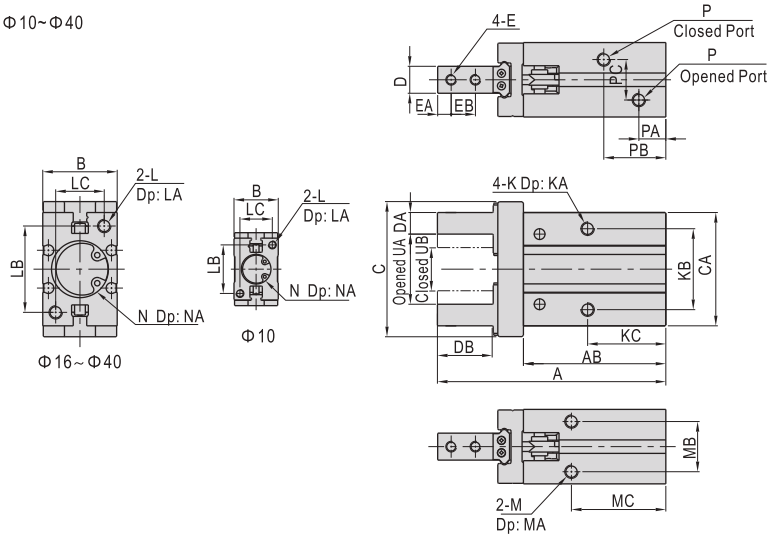

Model\Item	A	AB	B	C	CA	D	DA	DB	E	EA	EB
HFZ10	57	37.5	16.5	30	23	5 0 -0.05	4 0 -0.05	12	M2.5×0.45	3	5.7
HFZ16	67.5	42.5	23.5	39	30.5	8 0 -0.05	5 0 -0.05	15	M3×0.5	4	7
HFZ20	85	53	27.5	53	42	10 0 -0.05	8 0 -0.05	20	M4×0.7	5	9
HFZ25	103	64	33.5	71	52	12 0 -0.05	10 0 -0.05	25	M5×0.8	6	12
HFZ32	113(122)	67(76)	40	106	60	15 0 -0.05	12 0 -0.05	29	M6×1.0	7	14
HFZ40	139(152)	83(96)	48	132	72	18 0 -0.05	14 0 -0.05	36	M8×1.25	9	17

Model\Item	K	KA	KB	KC	L	LA	LB	LC	M	MA	MB	MC
HFZ10	M3×0.5	5	16	23	M3×0.5	6	18	12	M3×0.5	6	11.5	27
HFZ16	M4×0.7	7	24	24.5	M4×0.7	8	22	15	M4×0.7	4.5	16	30
HFZ20	M5×0.8	8	30	29	M5×0.8	10	32	18	M5×0.8	8	18.5	35
HFZ25	M6×1.0	10	36	30	M6×1.0	12	40	22	M6×1.0	10	22	36.5
HFZ32	M6×1.0	10	46	40(49)	M6×1.0	12	46	26	M6×1.0	10	26	48(57)
HFZ40	M8×1.25	12	56	49(62)	M8×1.25	16	56	32	M8×1.25	12	32	58(71)

Model\Item	N	NA	P	PA	PB	PC	UA(Opened)	UB(Closed)
HFZ10	Φ11 +0.05 0	1.5	M3×0.5	7	19	10	15.5 +2 0	11.5 0 -1
HFZ16	Φ17 +0.05 0	1.5	M5×0.8	7.5	19	13	21 +2 0	15 0 -1
HFZ20	Φ21 +0.05 0	2	M5×0.8	9.5	23	15	26.5 +2 0	16.5 0 -1
HFZ25	Φ26 +0.05 0	2	M5×0.8	9	24	20	33.5 +2 0	19.5 0 -1
HFZ32	Φ34 +0.05 0	2.5	M5×0.8	9.5	31(40)	24	48 +2.5 0	26 0 -1
HFZ40	Φ42 +0.05 0	2.5	M5×0.8	10.5	38(50)	28	60 +2.5 0	30 0 -1

Note) The values in "()" in the above table are single acting type sizes.

HFZ

Narrow type(R type)

Φ10~Φ25

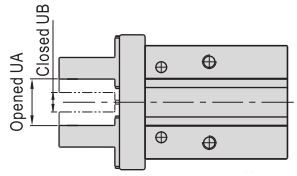

Model\Item	UA(Opened)	UB(Closed)
HFZ10-R	10 $^{+2}_{0}$	6 $^{0}_{-1}$
HFZ16-R	12.5 $^{+2}_{0}$	6.5 $^{0}_{-1}$
HFZ20-R	17 $^{+2}_{0}$	7 $^{0}_{-1}$
HFZ25-R	23 $^{+2.5}_{0}$	9 $^{0}_{-1}$

Note) The other dimensions are the same as standard type.

Side mounting type(B type)

Φ6

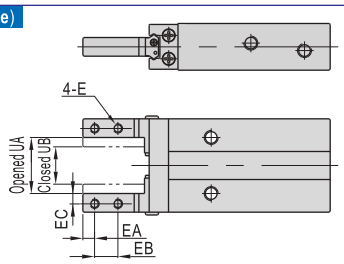

Φ10~Φ40

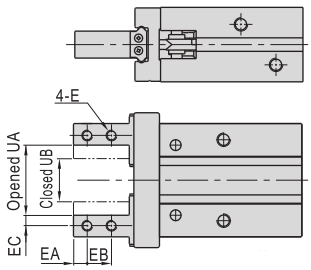

Model\Item	E	EA	EB	EC	UA(Opened)	UB(Closed)
HFZ6-B	M2 × 0.4	2.5	5	2	11 $^{+2}_{0}$	8 $^{0}_{-1}$
HFZ10-B	M2.5 × 0.45	3	5.7	2	15.5 $^{+2}_{0}$	11.5 $^{0}_{-1}$
HFZ16-B	M3 × 0.5	4	7	2.5	21 $^{+2}_{0}$	15 $^{0}_{-1}$
HFZ20-B	M4 × 0.7	5	9	4	26.5 $^{+2}_{0}$	16.5 $^{0}_{-1}$
HFZ25-B	M5 × 0.8	6	12	5	33.5 $^{+2}_{0}$	19.5 $^{0}_{-1}$
HFZ32-B	M6 × 1.0	7	14	6	48 $^{+2.5}_{0}$	26 $^{0}_{-1}$
HFZ40-B	M8 × 1.25	9	17	7	60 $^{+2.5}_{0}$	30 $^{0}_{-1}$

Note) The other dimensions are the same as standard type.

Side mounting and narrow type(W type)

Φ10~Φ25

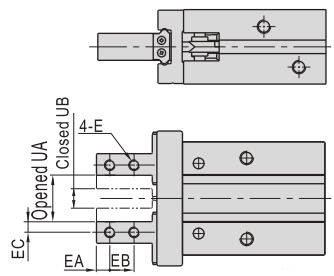

Model\Item	E	EA	EB	EC	UA(Opened)	UB(Closed)
HFZ10-W	M2.5 × 0.45	3	5.7	2	10 $^{+2}_{0}$	6 $^{0}_{-1}$
HFZ16-W	M3 × 0.5	4	7	2.5	12.5 $^{+2}_{0}$	6.5 $^{0}_{-1}$
HFZ20-W	M4 × 0.7	5	9	4	17 $^{+2}_{0}$	7 $^{0}_{-1}$
HFZ25-W	M5 × 0.8	6	12	5	23 $^{+2.5}_{0}$	9 $^{0}_{-1}$

Note) The other dimensions are the same as standard type.

Thru.hole mounting type(N type)

Φ6

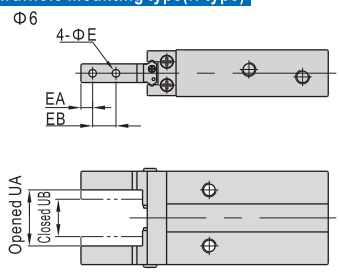

Φ10~Φ40

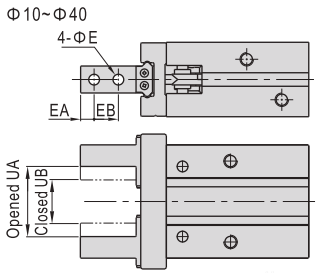

Model\Item	E	EA	EB	UA(Opened)	UB(Closed)
HFZ6-N	2.3	2.5	5	11 $^{+2}_{0}$	8 $^{0}_{-1}$
HFZ10-N	2.8	3	5.7	15.5 $^{+2}_{0}$	11.5 $^{0}_{-1}$
HFZ16-N	3.3	4	7	21 $^{+2}_{0}$	15 $^{0}_{-1}$
HFZ20-N	4.5	5	9	26.5 $^{+2}_{0}$	16.5 $^{0}_{-1}$
HFZ25-N	5.5	6	12	33.5 $^{+2}_{0}$	19.5 $^{0}_{-1}$
HFZ32-N	6.5	7	14	48 $^{+2.5}_{0}$	26 $^{0}_{-1}$
HFZ40-N	9	9	17	60 $^{+2.5}_{0}$	30 $^{0}_{-1}$

Note) The other dimensions are the same as standard type.

Thru.hole mounting and narrow type(M type)

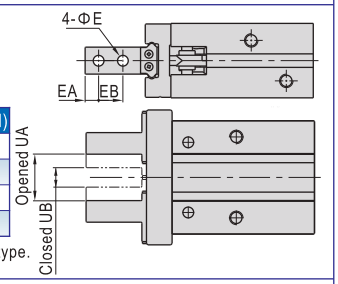

Model\Item	E	EA	EB	UA(Opened)	UB(Closed)
HFZ10-M	2.8	3	5.7	10 $^{+2}_{0}$	6 $^{0}_{-1}$
HFZ16-M	3.3	4	7	12.5 $^{+2}_{0}$	6.5 $^{0}_{-1}$
HFZ20-M	4.5	5	9	17 $^{+2}_{0}$	7 $^{0}_{-1}$
HFZ25-M	5.5	6	12	23 $^{+2.5}_{0}$	9 $^{0}_{-1}$

Note) The other dimensions are the same as standard type.

Bottom mounting type(F type)

Φ6

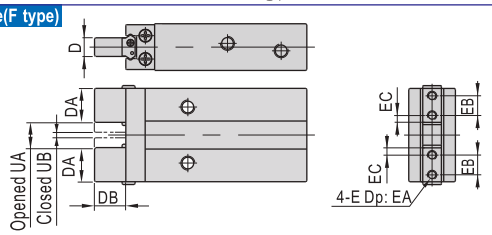

Φ10~Φ40

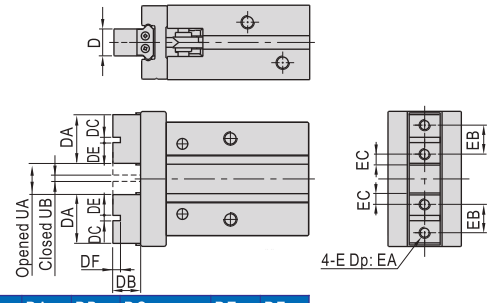

Model\Item	D	DA	DB	DC	DE	DF
HFZ6-F	4 $^{0}_{-0.05}$	7.5	7	-	-	-
HFZ10-F	5 $^{0}_{-0.05}$	11	5	2 $^{+0.025}_{0}$	4.5	2
HFZ16-F	8 $^{0}_{-0.05}$	14	8	2.5 $^{+0.025}_{0}$	5.8	2.5
HFZ20-F	10 $^{0}_{-0.05}$	18	10.5	3 $^{+0.025}_{0}$	7.5	3
HFZ25-F	12 $^{0}_{-0.05}$	22	13	4 $^{+0.030}_{0}$	9	4
HFZ32-F	15 $^{0}_{-0.05}$	34.5	18	5 $^{+0.030}_{0}$	14.8	5
HFZ40-F	18 $^{0}_{-0.05}$	41.5	22	6 $^{+0.030}_{0}$	17.7	6

Model\Item	E	EA	EB	EC	UA(Opened)	UB(Closed)
HFZ6-F	M2 × 0.4	3	3.5	2	4 $^{+1.5}_{0}$	1.5 $^{0}_{-0.5}$
HFZ10-F	M2.5 × 0.45	4	6	2.45	5.5 $^{+2}_{0}$	1.5 $^{0}_{-0.5}$
HFZ16-F	M3 × 0.5	6	8	3.05	7.5 $^{+2}_{0}$	1.5 $^{0}_{-0.5}$
HFZ20-F	M4 × 0.7	8	10	3.95	11.5 $^{+2}_{0}$	1.5 $^{0}_{-0.5}$
HFZ25-F	M5 × 0.8	10	12	4.9	16 $^{+2.5}_{0}$	2 $^{0}_{-0.5}$
HFZ32-F	M6 × 1.0	12	20	7.3	25 $^{+2.5}_{0}$	3 $^{0}_{-0.5}$
HFZ40-F	M8 × 1.25	16	24	8.7	33 $^{+3}_{0}$	3 $^{0}_{-0.5}$

Note) The other dimensions are the same as standard type.

HFZ

How to select product

Please select pneumatic finger according to the following steps:
The selection of the effective gripping force → the confirmation of the gripping point → the confirmation of the external force put on the gripping jaw.

1. The selection of the gripping force

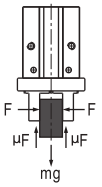

The gripping work-pieces shown above, on the impact condition of ordinary handling state, taking safety coefficient a=4, have a gripping force that is more than 10-20 times of the mass of the gripped objects.

μ =0.2	μ =0.1
$F=\frac{mg}{2\times0.2}\times4$	$F=\frac{mg}{2\times0.1}\times4$
$=10\times mg$	$=20\times mg$
10 times of the mass of the gripped objects	20 times of the mass of the gripped objects

The work-pieces as shown in the left :
F: Gripping force (N)
μ : friction coefficient between fittings and work-pieces.
m: mass of work-pieces
g: acceleration of gravity (=9.8m/s²)

The condition that the work-pieces won't drop is: $2\times\mu F>mg$

so: $F>\frac{mg}{2\times\mu}$

Safety coefficient is a, so F is:

$F=\frac{mg}{2\times\mu}\times a$

Note) If the friction coefficient μ >0.2, for safety, please also select clamping force according to the principle of 10~20 times of the mass of the clamped objects. As for large acceleration and shock, it requires for greater safety coefficient.

1.1) The actual gripping force must be within the effective gripping forces of different pneumatic fingers specifications shown in the below chart.

Double acting type closed gripping force

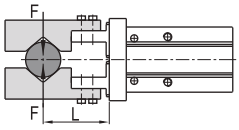

HFZ6

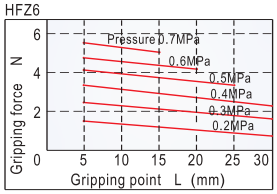

HFZ10

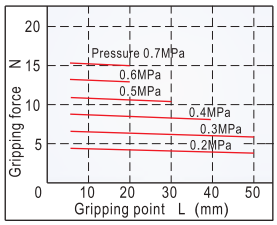

HFZ25

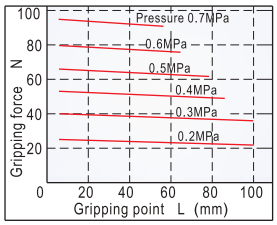

HFZ16

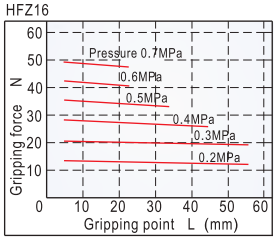

HFZ32

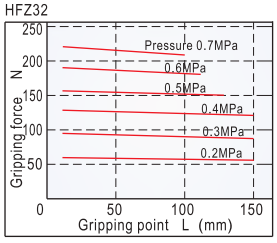

HFZ20

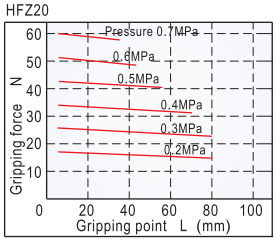

HFZ40

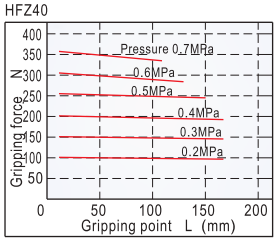

Double acting type opened gripping force

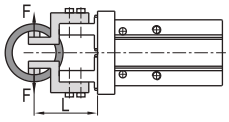

HFZ6

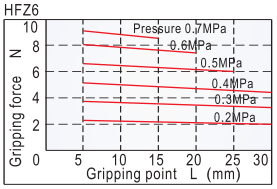

HFZ10

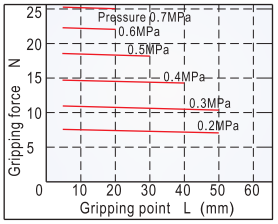

HFZ25

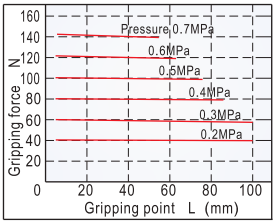

HFZ16

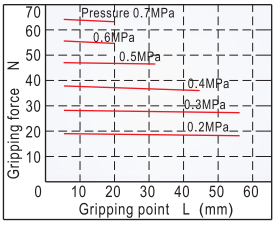

HFZ32

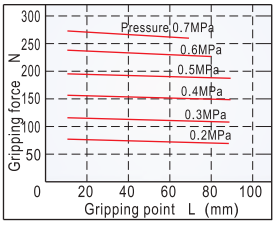

HFZ20

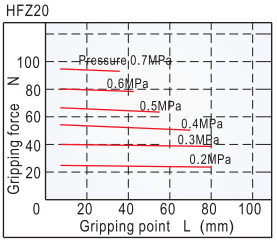

HFZ40

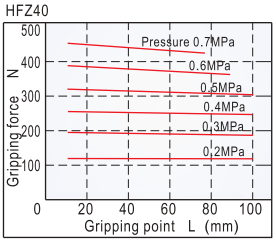

Single acting normally opened gripping force

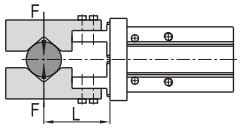

HFTZ6

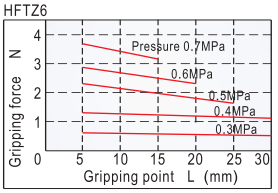

HFTZ10

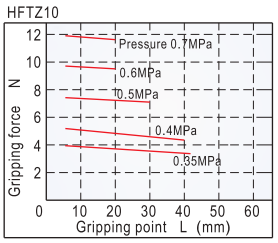

HFTZ25

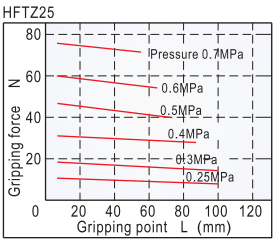

HFTZ16

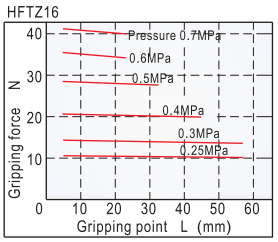

HFTZ32

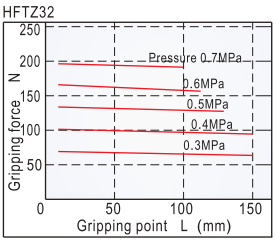

HFTZ20

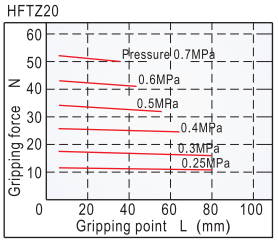

HFTZ40

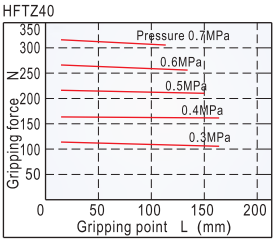

Single acting normally closed clamping force

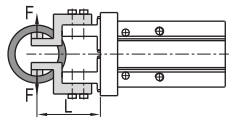

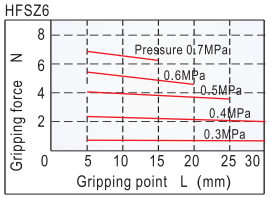

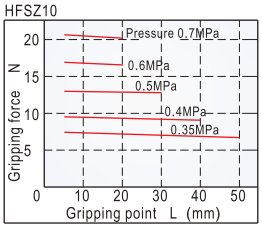

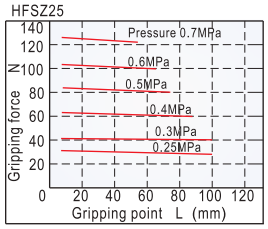

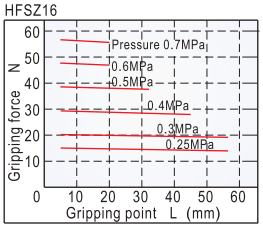

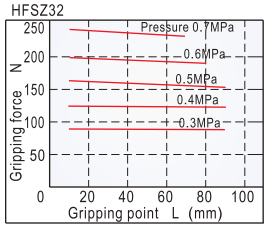

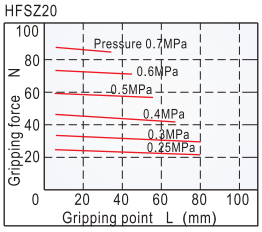

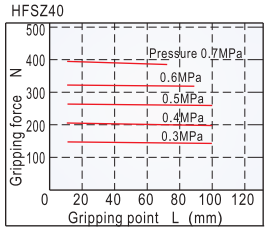

The range of the closed gripping points

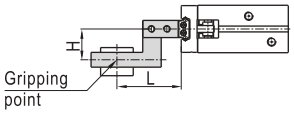

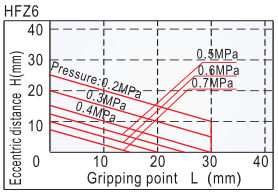

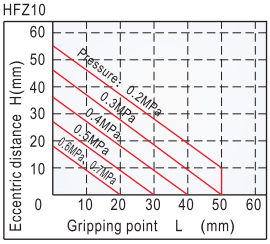

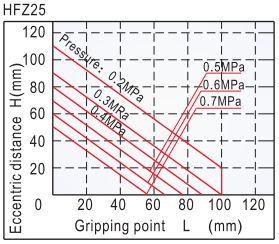

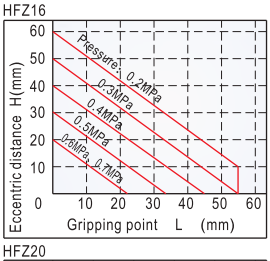

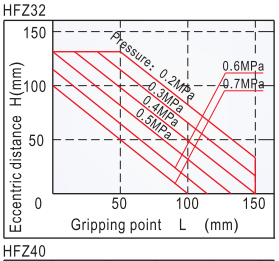

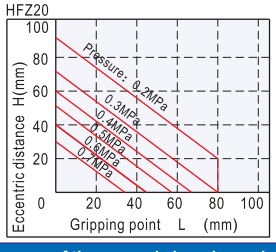

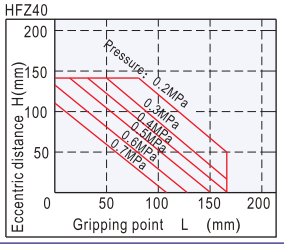

The range of the opened clamping point

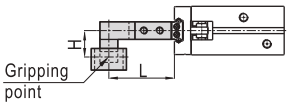

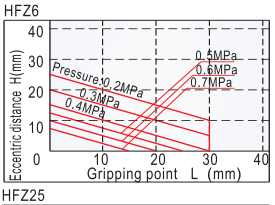

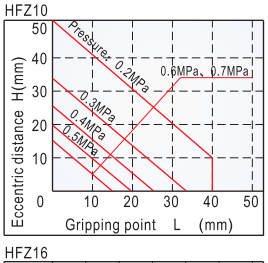

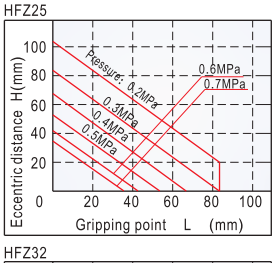

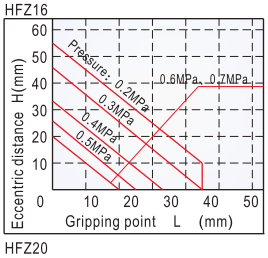

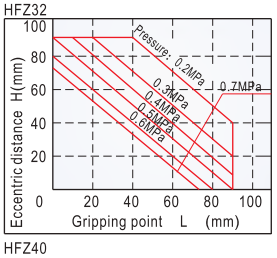

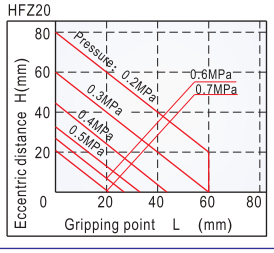

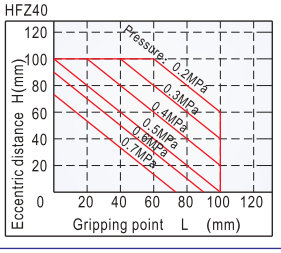

2. The selection of the gripping point

2.1) Please select the gripping point within the limited field shown below.
Over the limits, gripping jaws would be subjected to excessive torque loads, and lead to short life of the air gripper.

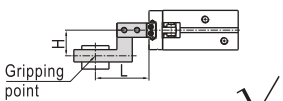

L and H have proper sizes √

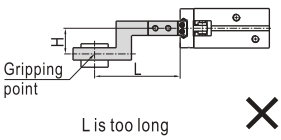

L is too long ×

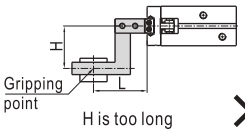

H is too long ×

HFZ

2.2) In the allowable range of gripping point, it is better to design for short and light fittings. If the fittings are long and heavy, the inertia force when the finger is open and close will become larger, and the performance of gripping jaw will be degraded, at the same time it will affect the life.

2.3) When the gripped object is very fine and thin, you have to equip with gap between fittings. If not, there will be unstable clamp, resulting in a position offset and adverse clamping and so on.

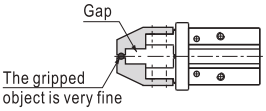

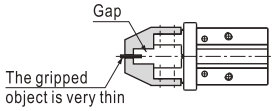

3. The confirmation of the external force put on the gripping jaw.

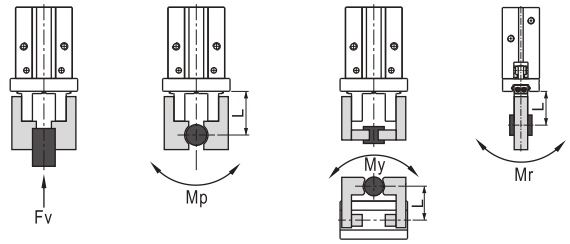

Bore size	The allowed vertical loads Fv(N)	Max. permissible torque (Nm) Mp	My	Mr
6	10	0.04	0.04	0.08
10	58	0.26	0.26	0.53
16	98	0.68	0.68	1.36
20	147	1.32	1.32	2.65
25	255	1.94	1.94	3.88
32	343	3	3	6
40	490	4.5	4.5	9

Note) The loads and torque values of said are all static values.

The calculation of allowable forces when moment loads work	Examples of calculation
Allowable load(N) = M(Maximum permissible moment)(N.m) / L × 10^{-3} (Unit conversion constant)	In the guide rail of HFZ16, the external force of the pitching moment static loads put on the point of L=30mm is f=10 N, Allowable load F= $\frac{0.68}{30\times10^{-3}}$ = 22.7(N) Actual load f=10(N)<22.7(N) To meet the using requirements

Installation and application

1. Due to the abrupt changes, the circuit pressure is low, which will lead to the decrease of the gripping force and falling of the work-pieces. In order to avoid the harm to the human body and damage to the equipment, anti-dropping device must be equipped.
2. Don't use the air gripper under strong external force and impact force.
3. Please contact with us when the single acting type clamps only with the spring force.
4. When install and fix the air gripper, avoid falling down, collision and damage.
5. When fixing the gripping jaw parts, don't twist the gripping jaw.
6. There are several kinds of installation method, and the locking torgue of fastening screw must be within the prescribed torque range shown in the below chart. If the locking torque is too large, it will cause the dysfunctional. If the locking torque is too small, it will cause the position deviation and fall.

Tail installation type

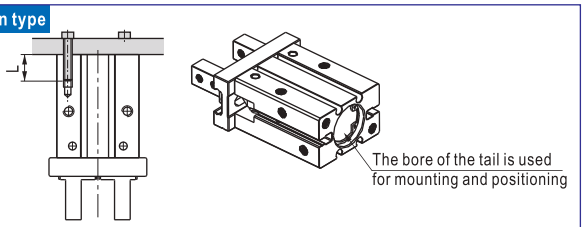

Bore size	The bolts type	Max. locking moment (Nm)	Max. screwed depth (mm)	The aperture of the positioning bore(mm)	The depth of the positioning bore(mm)
10	M3 × 0.5	0.88	6	Φ11 $^{+0.05}_{0}$	1.5
16	M4 × 0.7	2.1	8	Φ17 $^{+0.05}_{0}$	1.5
20	M5 × 0.8	4.3	10	Φ21 $^{+0.05}_{0}$	2
25	M6 × 1.0	7.3	12	Φ26 $^{+0.05}_{0}$	2
32	M6 × 1.0	7.9	12	Φ34 $^{+0.05}_{0}$	2.5
40	M8 × 1.25	17.7	16	Φ42 $^{+0.05}_{0}$	2.5

The installation of the front threaded hole

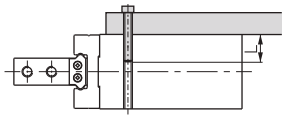

Bore size	The bolts type	Max. locking moment (Nm)	Max. screwed depth (mm)
6	M3 × 0.5	0.88	10
10	M3 × 0.5	0.69	5
16	M4 × 0.7	2.1	7
20	M5 × 0.8	4.3	8
25	M6 × 1.0	7.3	10
32	M6 × 1.0	7.9	12
40	M8 × 1.25	17.7	12

The installation of the front through hole

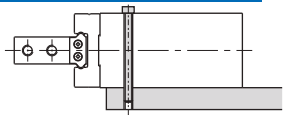

Bore size	The bolts type	Max. locking moment (Nm)	Max. screwed depth (mm)
6	M2.5 × 0.45	0.49	-
10	M2.5 × 0.45	0.49	5
16	M3 × 0.5	0.88	8
20	M4 × 0.7	2.1	10
25	M5 × 0.8	4.3	12
32	M5 × 0.8	4.3	13
40	M6 × 1.0	7.3	16

Surface installation type

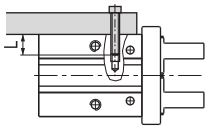

Bore size	The bolts type	Max. locking moment (Nm)	Max. screwed depth (mm)
10	M3 × 0.5	0.9	6
16	M4 × 0.7	1.6	4.5
20	M5 × 0.8	3.3	8
25	M6 × 1.0	5.9	10
32	M6 × 1.0	5.9	10
40	M8 × 1.25	13.7	12

7. The installation method of the gripping jaw fittings
When install the gripping jaw fittings, you have to pay particular attention that you can only hold the gripping jaw by using spanner, and then lock the screws with allen wrench. Never clamp the body directly and then lock the screws, otherwise the parts will be easily damaged.

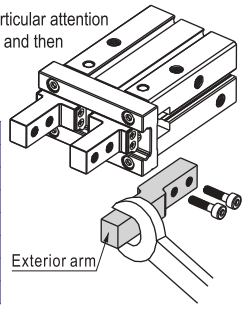

Bore size	The bolts type	Max. locking moment (Nm)
6	M2 × 0.4	0.15
10	M2.5 × 0.45	0.31
16	M3 × 0.5	0.59
20	M4 × 0.7	1.4
25	M5 × 0.8	2.8
32	M6 × 1.0	4.9
40	M8 × 1.25	11.8

8. Confirm that there is no external forces exerted on the gripping jaw.
Transverse load acts on the gripping jaw, which will cause impact load and leads to the shaking and damage of gripping jaw. Equip with gaps so that the air gripper will not crash into work-pieces and accessories at the end of its trip.

8.1) The end of stroke under the open state of air gripper

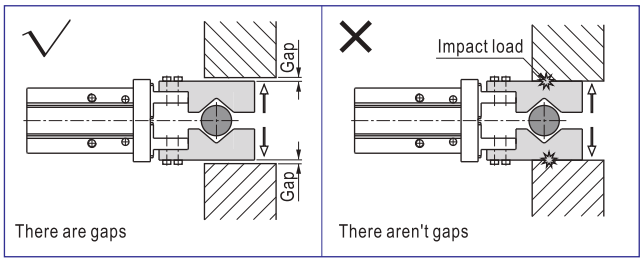

8.2) The end of stroke under the move state of air gripper

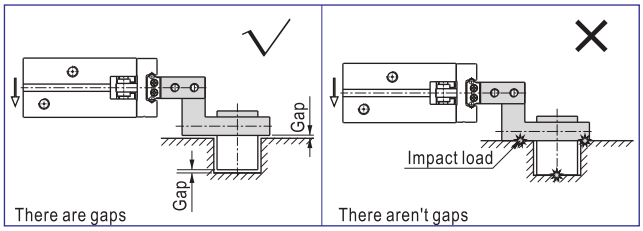

8.3) Reverse motion state
When reverse motion state, the gripping point must be precision, otherwise in the reverse motion state the air gripper maybe impact with ambience and will cause impact load .

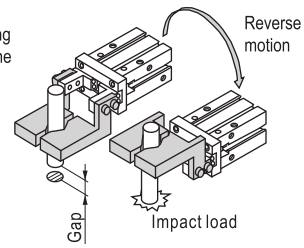

9. When the work-pieces are inserted, the center line should be coaxial, no offset, in case there are external force generated on gripping jaw. When testing, it is specially required that the manual operation should be reduced, the pressure should be used to run it at a low speed, and guarantee the safety and no impact.

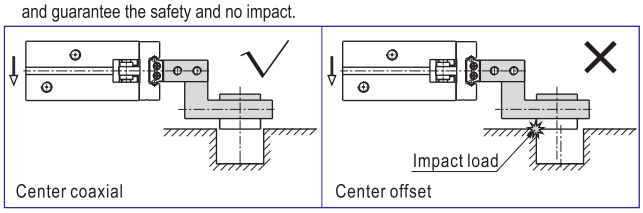

10. Please use the flow control valve to adjust the opening and closing speed of gripping jaw if too fast.
11. People can not enter the movement path of air gripper and articles can not be placed on the path too.
12. Before removing the air gripper, please confirm that it is out of working state, and then discharge of compressed air.

Specification

Bore size (mm)			10	16	20	25	32
Acting type			Double acting, Single acting				
Fluid			Air(to be filtered by 40 μ m filter element)				
Operating pressure	Double acting	Φ10	0.2~0.7MPa(28~100psi)(2.0~7.0bar)				
		Others	0.15~0.7MPa(22~100psi)(1.5~7.0bar)				
	Single acting	Φ10	0.35~0.7MPa(50~100psi)(3.5~7.0bar)				
		Others	0.25~0.7MPa(36~100psi)(2.5~7.0bar)				
Proof pressure			1.05MPa(150psi)(10.5bar)				
Temperature ℃			-10~70				
Lubrication			Cylinder: Not required; Gripper jaws: Lubricate grease				
Max. gripping length① mm			30	40	60	70	90
Max. frequency			180(c.p.m)				60(c.p.m)
Sensor switches ②				CS1-G\DS1-G			CS1-G\DS1-G、DS1-H
Port size			M3 × 0.5	M5 × 0.8			

① Refer to right graph for the definition of max. gripping length.
② Sensor switch should be ordered additionally, please refer to P381~402 for detail of sensor switch.

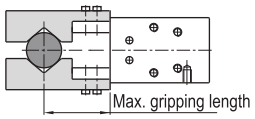

Symbol

HFP: Double acting

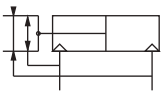

HFTP: Single acting and normally opened

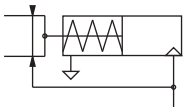

Product feature

1. A structure of lever type gripping is designed to reduce the cost under the premise of accuracy.
2. A sheet metal is installed between the finger and body to reduce abrasion and extend the service life.
3. The contact area between finger and body is enlarged to reduce shaking and enhance the gripping accuracy.
4. The finger clamps when the piston rod pushes out and stretches when the piston rod retracts. The gripping force is 20%~30% greater than the tensile force.
5. Can be mounted from three directions.
6. Magnet is included in the standard configuration.

Ordering code

HFP 20 □

Model

HFP: Air finger(Double acting) (mechanical parallel style)
HFTP: Air finger(Single acting and nrmally closed) (mechanical parallel style)

Bore size

10: Φ10mm
16: Φ16mm
20: Φ20mm
25: Φ25mm
32: Φ32mm

Figer type

Blank:Standard	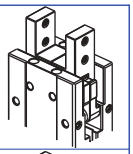
N:Thru.hole mounting type	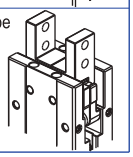

Add) HFP series are all attached with magnet.

Inner structure and material of major parts

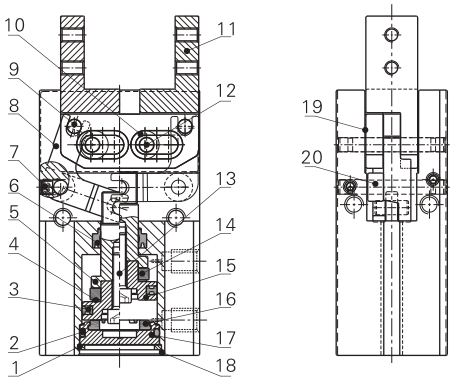

NO.	Item	Material	NO.	Item	Material
1	C clip	Spring steel	11	Gripping jaws	Stainless steel
2	O-ring	NBR	12	Pin	Stainless steel
3	Piston seal	NBR	13	Screw	Carbon steel
4	Magnet washer	NBR	14	Magnet	Sintered metal (Neodymium-iron-boron)
5	Piston rod	Aluminum alloy Stainless steel	15	Piston	Aluminum alloy Stainless steel
6	Rod packing	NBR	16	Bumper	TPU
7	Countersink screw	Carbon steel	17	Back cover	Aluminum alloy
8	Curved bar	Stainless steel	18	Body	Aluminum alloy
9	Pin	Stainless steel	19	Retaining ring	Stainless steel
10	Guide sleeve	Stainless steel	20	Stopper sleeve	Stainless steel

Dimensions

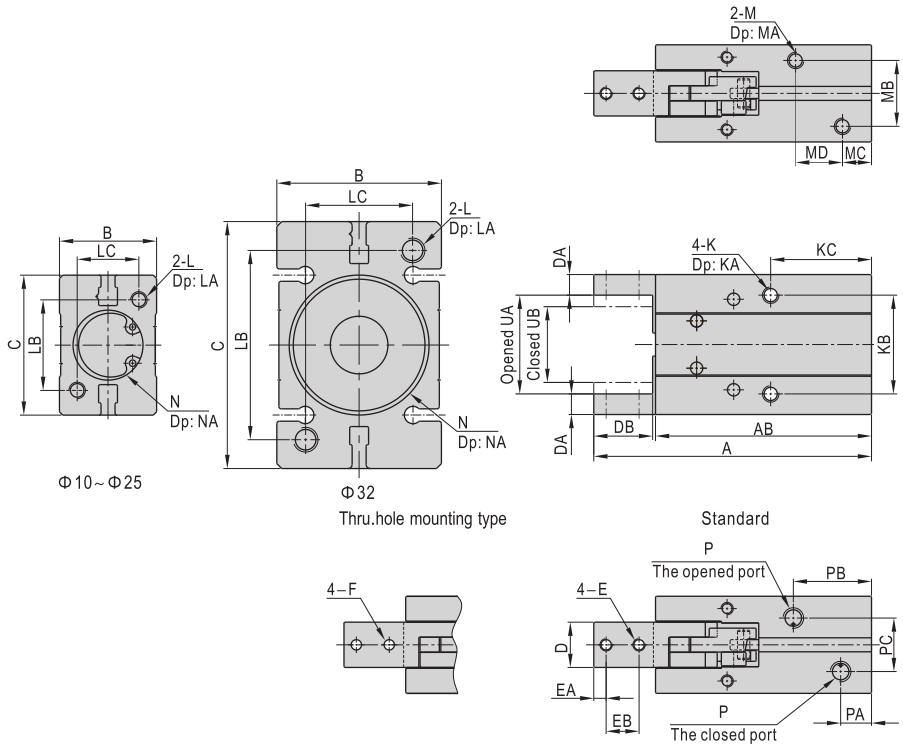

Model\Item	A	AB	B	C	D	DA	DB	E	EA	EB	F	K	KA	KB
HFP10	57(62)	44.5(49.5)	16	23	7	4	12	M2.5×0.45	3	5.5	Φ2.8	M3×0.5	5	16
HFP16	72(77)	56.5(61.5)	23.5	34	11	5	15	M3×0.5	4	7	Φ3.3	M4×0.7	8	24
HFP20	89.5(94.5)	69(74)	27.5	45	12	6	20	M4×0.7	5	9	Φ4.5	M5×0.8	10	30
HFP25	104.5(109.5)	78.5(83.5)	33.5	52	14	8	25	M5×0.8	6	12	Φ5.5	M6×1.0	12	36
HFP32	118(126)	88(96)	40	60	18	9	29	M6×1.0	7	14	Φ6.5	M6×1.0	12	46

Model\Item	KC	L	LA	LB	LC	M	MA	MB	MC	MD	N	NA
HFP10	23(28)	M3×0.5	6	18	12	M3×0.5	6	10	6(11)	10	$\Phi 11\ ^{+0.05}_{0}$	1
HFP16	29(34)	M4×0.7	8	22	15	M4×0.7	8	16	6(11)	16	$\Phi 17\ ^{+0.05}_{0}$	1.2
HFP20	34(39)	M5×0.8	10	32	18	M5×0.8	10	18	8(13)	16	$\Phi 21\ ^{+0.05}_{0}$	1.2
HFP25	31.5(36.5)	M6×1.0	12	40	22	M6×1.0	12	24	8(13)	16	$\Phi 26\ ^{+0.05}_{0}$	1.5
HFP32	37.5(45.5)	M6×1.0	12	46	26	M6×1.0	12	30	8(16)	20	$\Phi 34\ ^{+0.05}_{0}$	1.5

Model\Item	P	PA	PB	PC	UA(Opened)	UB(Closed)
HFP10	M3×0.5	6	16.5(23)	10	$14.5\ ^{+1}_{0}$	$10.5\ ^{0}_{-1}$
HFP16	M5×0.8	7.5	20(25)	13	$23.5\ ^{+1}_{0}$	$15.5\ ^{0}_{-1}$
HFP20	M5×0.8	7.5	24(29)	15	$32.5\ ^{+1.5}_{0}$	$20.5\ ^{0}_{-1}$
HFP25	M5×0.8	8	22(29)	20	$35.5\ ^{+1.5}_{0}$	$21.5\ ^{0}_{-1}$
HFP32	M5×0.8	9.5	26(37)	22	$42\ ^{+1.5}_{0}$	$26.5\ ^{0}_{-1}$

Note) The values in "()" in the above table are single acting type sizes.

How to select product

Please select pneumatic finger according to the following steps:
The selection of the effective gripping force → the confirmation of the gripping point → the confirmation of the external force put on the gripping jaw.

1. The selection of the gripping force

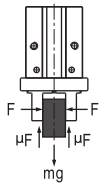

The gripping work-pieces shown above, on the impact condition of ordinary handling state, taking safety coefficient a=4, have a gripping force that is more than 10-20 times of the mass of the gripped objects.

μ =0.2	μ =0.1
$F=\frac{mg}{2\times 0.2}\times 4$	$F=\frac{mg}{2\times 0.1}\times 4$
$=10\times mg$	$=20\times mg$
10 times of the mass of the gripped objects	20 times of the mass of the gripped objects

The work-pieces as shown in the left :
F: Gripping force (N)
μ : friction coefficient between fittings and work-pieces.
m: mass of work-pieces
g: acceleration of gravity (=9.8m/s²)

The condition that the work-pieces won't drop is: $2\times\mu F>mg$

so: $F>\frac{mg}{2\times\mu}$

Safety coefficient is a, so F is:

$F=\frac{mg}{2\times\mu}\times a$

Note) If the friction coefficient μ >0.2, for safety, please also select clamping force according to the principle of 10~20 times of the mass of the clamped objects. As for large acceleration and shock, it requires for greater safety coefficient.

1.1) The actual gripping force must be within the effective gripping forces of different pneumatic fingers specifications shown in the below chart.

Double acting type closed gripping force

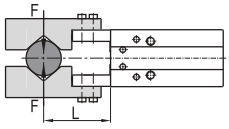

HFP20

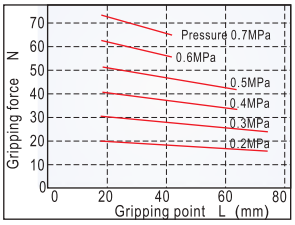

HFP10

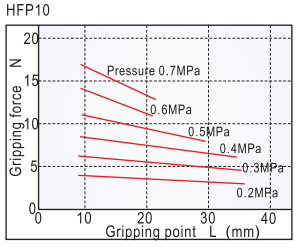

HFP25

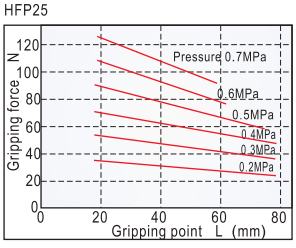

HFP16

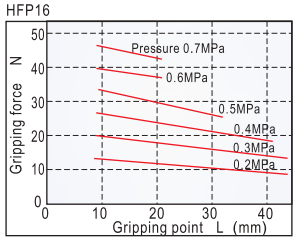

HFP32

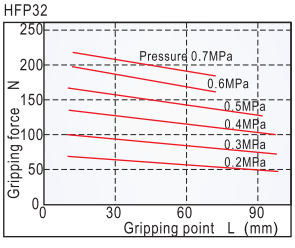

Double acting type opened gripping force

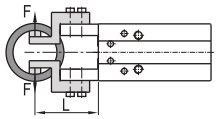

HFP20

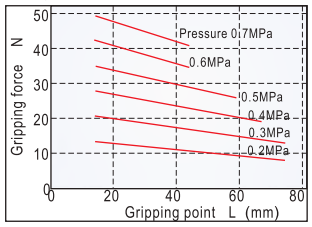

HFP10

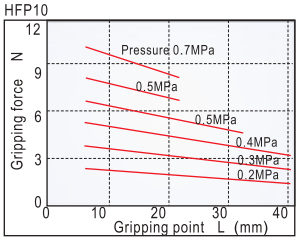

HFP25

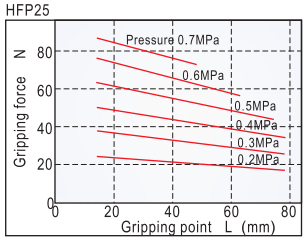

HFP16

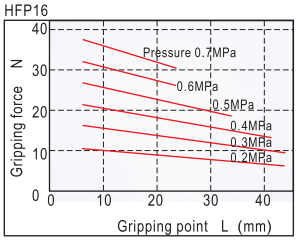

HFP32

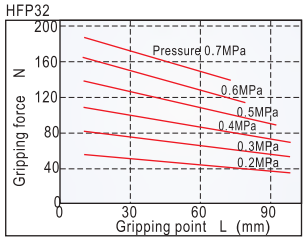

2. The selection of the gripping point

2.1) Select the gripping point within the maximum gripping length range. Over the limits, gripping jaws would be subjected to excessive torque loads, and lead to short life of the air gripper.

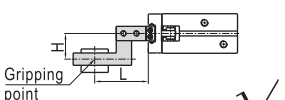

L and H have proper sizes √

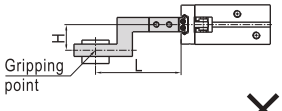

L is too long ×

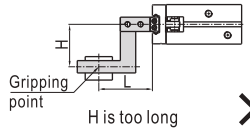

H is too long ×

2.2) In the allowable range of gripping point, it is better to design for short and light fittings. If the fittings are long and heavy, the inertia force when the finger is open and close will become larger, and the performance of gripping jaw will be degraded, at the same time it will affect the life.

2.3) When the gripped object is very fine and thin, you have to equip with gap between fittings. If not, there will be unstable clamp, resulting in a position offset and adverse clamping and so on.

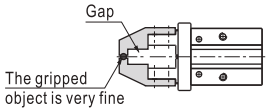

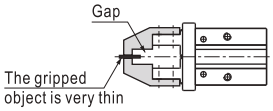

3. The confirmation of the external force put on the gripping jaw.

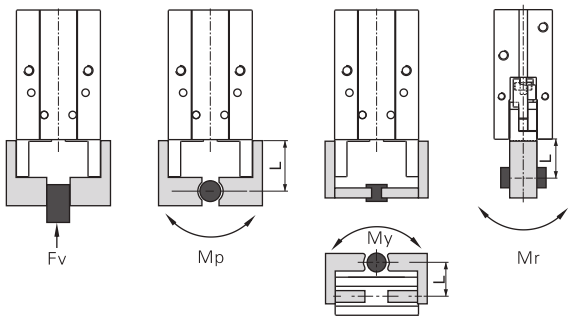

Bore size	The allowed vertical loads Fv(N)	Max. permissible torque (Nm)		
		Mp	My	Mr
10	58	0.26	0.26	0.53
16	98	0.68	0.68	1.36
20	147	1.32	1.32	2.65
25	255	1.94	1.94	3.88
32	343	3	3	6

Note) The loads and torque values of said are all static values.

The calculation of allowable forces when moment loads work	Examples of calculation
Allowable load(N) $= \frac{M(\text{Maximum permissible moment})(N.m)}{L \times \underbrace{10^{-3}}_{\text{Unit conversion constant}}}$	In the guide rail of HFP16, the external force of the pitching moment static loads put on the point of L=30mm is f=10 N, Allowable load $F = \frac{0.68}{30 \times 10^{-3}}$ $= 22.7(N)$ Actual load f=10(N)<22.7(N) To meet the using requirements

Installation and application

1. Due to the abrupt changes, the circuit pressure is low, which will lead to the decrease of the gripping force and falling of the work-pieces. In order to avoid the harm to the human body and damage to the equipment, anti-dropping device must be equipped.
2. Don't use the air gripper under strong external force and impact force.
3. When install and fix the air gripper, avoid falling down, collision and damage.
4. When fixing the gripping jaw parts, don't twist the gripping jaw.
5. There are several kinds of installation method, and the locking torgue of fastening screw must be within the prescribed torque range shown in the below chart. If the locking torque is too large, it will cause the dysfunctional. If the locking torque is too small, it will cause the position deviation and fall.

Tail installation type

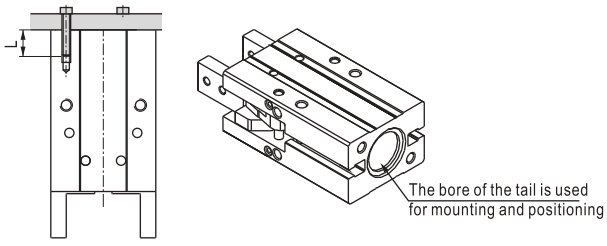

Bore size	The bolts type	Max. locking moment (Nm)	Max. screwed depth (mm)	The aperture of the positioning bore(mm)	The depth of the positioning bore(mm)
10	M3 × 0.5	1	6	$\Phi 11^{+0.05}_{0}$	1
16	M4 × 0.7	2	8	$\Phi 17^{+0.05}_{0}$	1.2
20	M5 × 0.8	4.5	10	$\Phi 21^{+0.05}_{0}$	1.2
25	M6 × 1.0	7	12	$\Phi 26^{+0.05}_{0}$	1.5
32	M6 × 1.0	7	13	$\Phi 34^{+0.05}_{0}$	1.5

The installation of the front threaded hole

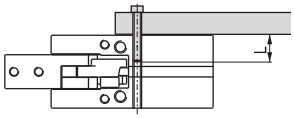

Bore size	The bolts type	Max. locking moment (Nm)	Max. screwed depth (mm)
10	M3 × 0.5	0.7	5
16	M4 × 0.7	2	8
20	M5 × 0.8	4.5	10
25	M6 × 1.0	7	12
32	M6 × 1.0	7	12

Surface installation type

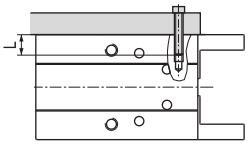

Bore size	The bolts type	Max. locking moment (Nm)	Max. screwed depth (mm)
10	M3 × 0.5	1	6
16	M4 × 0.7	2	8
20	M5 × 0.8	4.5	10
25	M6 × 1.0	7	12
32	M6 × 1.0	7	12

6. Other contents of installation and operation are the same with those of HFZ. Refer to the "Installation and Operation" instruction of HFZ.

Specification

Bore size (mm)			6	10	16	20	25	32
Acting type			Double acting Single acting					
Fluid			Air(to be filtered by 40 μ m filter element)					
Operating pressure	Double acting		0.15~0.7MPa(22~100psi)(1.5~7.0bar)					
	Single acting	Φ6	0.3~0.7MPa(45~100psi)(3.0~7.0bar)					
		Φ10~Φ32	0.25~0.7MPa(36~100psi)(2.5~7.0bar)					
Temperature ℃			-20~70					
Lubrication			Cylinder: Not required; Gripper jaws: Lubricate grease					
Cushion type			Bumper					
Max. frequency			180(c.p.m)					
Sensor switches ①			DS1-H	CS1-G、DS1-G				

① Sensor switch should be ordered additionally, please refer to P381~402 for detail of sensor switch.

Ordering code

HFY 20

Model	Bore size
HFY: Air finger(Angle style, Double acting)	6: Φ6mm
HFTY: Air finger(Angle style, Single acting and normally opened)	10: Φ10mm
	16: Φ16mm
	20: Φ20mm
	25: Φ25mm
	32: Φ32mm

Add) HFY series are all attached with magnet.

Symbol

HFY: Double acting

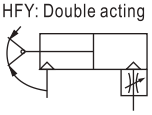

HFTY: Single acting and normally opened

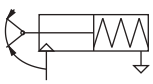

Product feature

1. Using a single piston structure, large gripping torque.
2. Integrated with variable flow valve, it is easy and convenient to adjust the speed of opening and closing of gripping jaw.
3. Reasonable gripping angle, wide range of actual use.
4. Precise positioning accuracy, it is more accurate and reliable when gripping work-piece.
5. Various types of installation, it is convenient for the use in different occasions.
6. All series are attached with magnet, so that it is easy to control.

Gripping force and stroke

Acting	Model	Theoretical gripping torque (N·cm) Closed	Opened	Max. length of griping point (L)(mm)	Opening angle	Closing angle
Double acting	HFY6	7.4 × P	10.6 × P	30	30^{+3}_{0}	-10^{0}_{-3}
	HFY10	17.6 × P	29.4 × P	30		
	HFY16	90 × P	129 × P	40		
	HFY20	152 × P	252 × P	60		
	HFY25	304 × P	473 × P	70		
	HFY32	637 × P	904 × P	85		
Single acting Normally opened	HFTY6	5.7 × P	-	30		
	HFTY10	11.8 × P	-	30		
	HFTY16	71.2 × P	-	40		
	HFTY20	122.4 × P	-	60		
	HFTY25	252 × P	-	70		
	HFTY32	589 × P	-	85		

Note) The P in the gripping torque shown in the above chart represents the actual use of air pressure.

Inner structure and material of major parts

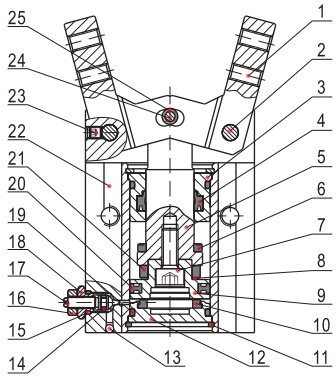

NO.	Item	Material
1	Gripping jaws	Carbon steel
2	Pin	Stainless steel
3	Front cover	Aluminum alloy
4	Rod packing	NBR
5	Piston rod	Aluminum alloy/Stainless steel
6	Bumper	TPU
7	Countersink screw	Carbon steel
8	Magnet washer	NBR
9	Piston	Aluminum alloy/Stainless steel
10	Bumper	TPU
11	C clip	Spring steel
12	Back cover	Aluminum alloy
13	Steel ball	Stainless steel
14	O-ring	NBR
15	O-ring	NBR
16	Screw cap	Carbon steel
17	Adjustable nut	Brass
18	Fixed nut	Brass
19	O-ring	NBR
20	Piston seal	NBR
21	Magnet	Sintered metal (Neodymium-iron-boron)
22	Body	Aluminum alloy
23	Countersink screw	Carbon steel
24	Pin	Stainless steel
25	Pin sheath	Stainless steel

HFY

Dimensions

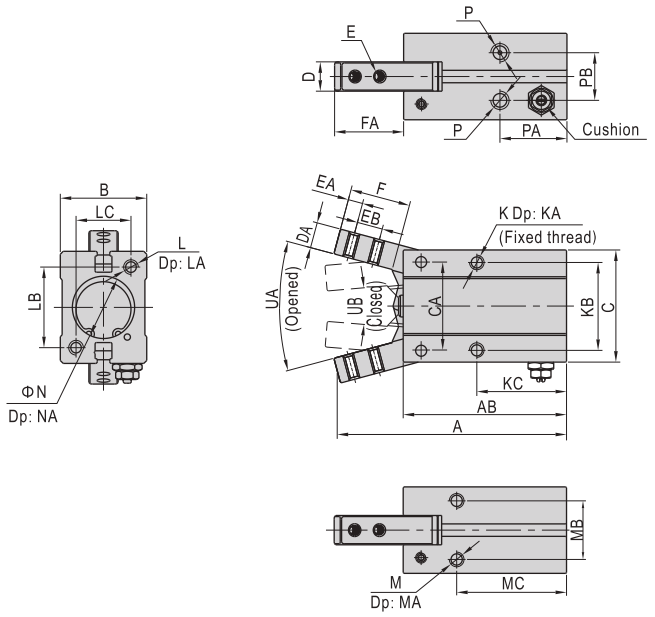

Bore size\Item	A	AB	B	C	CA	D	DA	E	EA	EB	F	FA
6	47.5	36	10.5	20	14	4	4	M2 × 0.4	2.5	5	11	12
10	52.5	38.5	16.5	23	14	6.4	4	M2.5 × 0.45	3	5.7	12	14.5
16	62.5	44.5	23.5	30.5	24	8	7	M3 × 0.5	4	7	16	19
20	78	55	27.5	42	30	10	8	M4 × 0.7	5	9	20	23.5
25	92	60.5	33.5	52	36	12	10	M5 × 0.8	8	12	27	33
32	96.5	68	40	60	42	18	10	M6 × 1.0	6	14	27	29.5

Bore size\Item	K	KA	KB	KC	L	LA	LB	LC	M	MA
6	M3 × 0.5	Thru. thread	12	26	-	-	-	-	-	-
10	M3 × 0.5	5	16	23	M3 × 0.5	6	18	12	M3 × 0.5	6
16	M4 × 0.7	7	24	24.5	M4 × 0.7	8	22	15	M4 × 0.7	8
20	M5 × 0.8	8	30	29	M5 × 0.8	10	32	18	M5 × 0.8	10
25	M6 × 1.0	10	36	30	M6 × 1.0	12	40	22	M6 × 1.0	10
32	M6 × 1.0	10	44	37.5	M6 × 1.0	12	46	26	M6 × 1.0	10

Bore size\Item	MB	MC	N	NA	P	PA	PB	UA(Opened)	UB(Closed)
6	-	-	$7^{+0.05}_{0}$	1.5	M3 × 0.5	19	1.5	30°	10°
10	11.5	27	$11^{+0.05}_{0}$	1.5	M3 × 0.5	19	10	30°	10°
16	16	30	$17^{+0.05}_{0}$	1.5	M5 × 0.8	18.5	13	30°	10°
20	18.5	35	$21^{+0.05}_{0}$	1.5	M5 × 0.8	22	15	30°	10°
25	22	36.5	$26^{+0.05}_{0}$	1.5	M5 × 0.8	23.5	20	30°	10°
32	26	30	$34^{+0.05}_{0}$	2	M5 × 0.8	31	24	30°	10°

How to select product

1. The selection of gripping force
Please determine the gripping force according to the below methods.

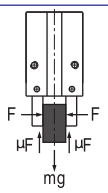

The gripping work-pieces shown above, on the impact condition of ordinary handling state, taking safety coefficient a=4, have a gripping force that is more than 10-20 times of the mass of the gripped objects.

μ =0.2	μ =0.1
$F=\frac{mg}{2\times 0.2}\times 4$ $=10\times mg$	$F=\frac{mg}{2\times 0.1}\times 4$ $=20\times mg$
10 times of the mass of the gripped objects	20 times of the mass of the gripped objects

The work-pieces as shown in the left :
F: Gripping force (N)
μ : friction coefficient between fittings and work-pieces.
m: mass of work-pieces
g: acceleration of gravity (=9.8m/s^2)

The condition that the work-pieces won't drop is: 2 × μ F>mg

so: $F>\frac{mg}{2\times\mu}$

Safety coefficient is a, so F is:

$F=\frac{mg}{2\times\mu}\times a$

Note) If the friction coefficient μ >0.2, for safety, please also select clamping force according to the principle of 10~20 times of the mass of the clamped objects. As for large acceleration and shock, it requires for greater safety coefficient.

2. The selection of the gripping point
When the gripping force is determined, select the gripping point according to the limitation ranges shown in the below chart. If the gripping point is over the limit, the gripping jaw will be subjected to excessive moment load, and lead to short life of air gripper.

Double acting type closed gripping force

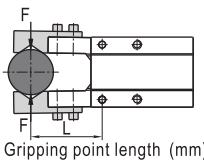

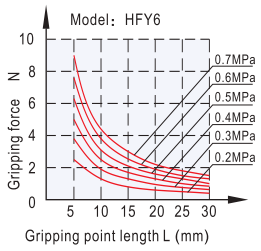

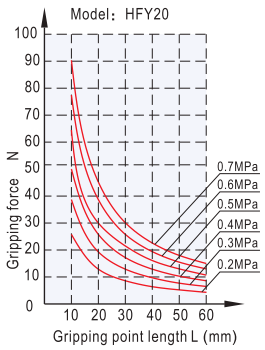

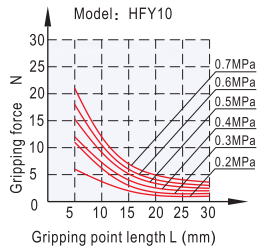

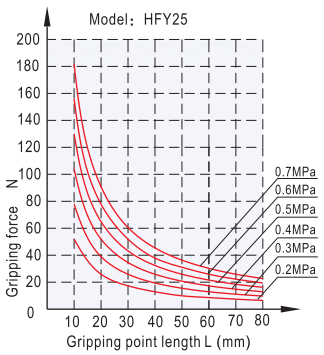

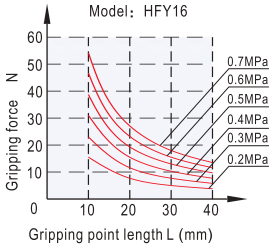

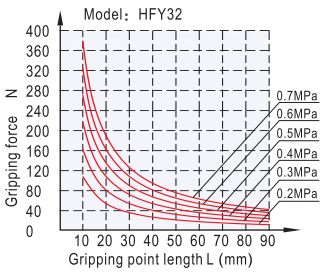

HFY

Single acting closed gripping force

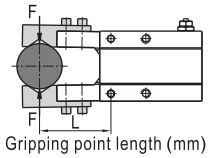

Gripping point length (mm)

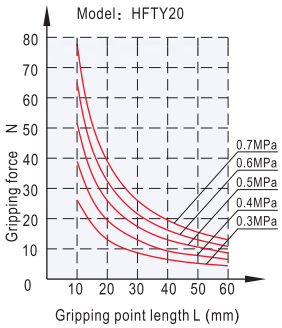

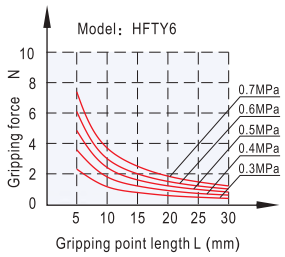

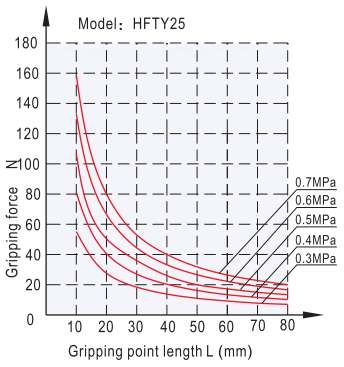

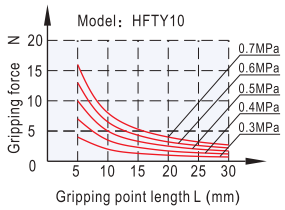

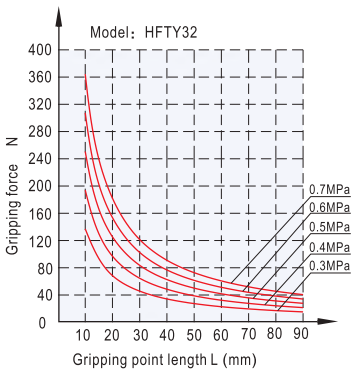

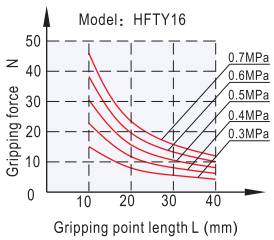

Installation and application

1. Due to the abrupt changes, the pressure is low, which will lead to the decrease of the gripping force and falling of the work-pieces. In order to avoid the harm to the human body and damage to the equipment, anti-dropping device must be equipped.
2. Don't use the air gripper under strong external force and impact force.
3. When install and fix the air gripper, avoid falling down, collision and damage.
4. When fixing the gripping jaw parts, don't twist the gripping jaw.
5. There are several kinds of installation method, and the torque of fastening screw must be within the prescribed moment range shown in the below chart. If the locking moment is too large, it will cause the dysfunctional. If the locking moment is too small, it will cause the position deviation and fall.

Tail installation type

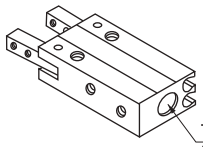

The bore of the tail is used for mounting and positioning

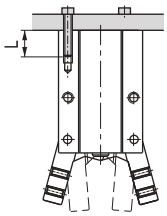

Bore size	The bolts type	Max. locking moment (Nm)	Max. screwed depth (mm)	The aperture of the positioning bore(mm)	The depth of the positioning bore(mm)
6	-	-	-	Φ7H9	1.5
10	M3 × 0.5	0.88	6	Φ11H9	1.5
16	M4 × 0.7	2.1	8	Φ17H9	1.5
20	M5 × 0.8	4.3	10	Φ21H9	1.5
25	M6 × 1.0	7.3	12	Φ26H9	1.5
32	M6 × 1.0	7.3	12	Φ34H9	1.5

The installation of front threaded hole

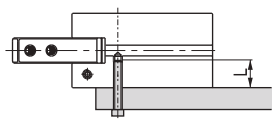

Bore size	The bolts type	Max. locking moment (Nm)	Max. screwed depth (mm)
6	M3 × 0.5	0.69	5
10	M3 × 0.5	0.69	5
16	M4 × 0.7	2.1	7
20	M5 × 0.8	4.3	8
25	M6 × 1.0	7.3	10
32	M6 × 1.0	7.3	10

The installation of front through hole

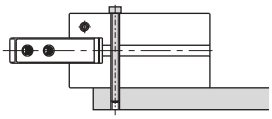

Bore size	The bolts type	Max. locking moment (Nm)	Max. screwed depth (mm)
6	M2.5 × 0.45	0.49	5
10	M2.5 × 0.45	0.49	5
16	M3 × 0.5	0.88	7
20	M4 × 0.7	2.1	8
25	M5 × 0.8	4.3	10
32	M5 × 0.8	4.3	10

Surface installation type

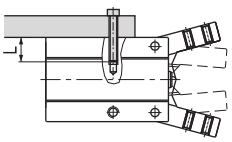

Bore size	The bolts type	Max. locking moment (Nm)	Max. screwed depth (mm)
10	M3 × 0.5	0.88	6
16	M4 × 0.7	1.6	6.5
20	M5 × 0.8	3.3	8
25	M6 × 1.0	5.9	10
32	M6 × 1.0	5.9	10

6. The installation method of the gripping jaw fittings
When install the gripping jaw fittings, you have to pay particular attention that you can only hold the gripping jaw by using spanner, and then lock the screws with allen wrench. Never clamp the body directly and then lock the screws, otherwise the parts will be easily damaged.

Bore size	The bolts type	Max. locking moment(Nm)
6	M2 × 0.4	0.15
10	M2.5 × 0.45	0.31
16	M3 × 0.5	0.59
20	M4 × 0.7	1.4
25	M5 × 0.8	2.8
32	M6 × 1.0	4.9

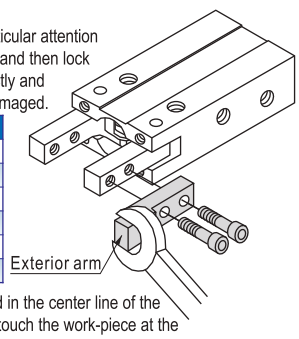

7. When gripping work-piece, the work-piece must be located in the center line of the two gripping jaws, and the two gripping jaws also need to touch the work-piece at the same time, otherwise they will be easily damaged.
8. Confirm that there is no additional external forces that are exerted on the gripping jaw. Transverse load acts on the gripping jaw, which will cause impact load and leads to the shaking and damage of gripping jaw. Equip with gaps so that the air gripper will not crash into work-pieces and accessories at the end of its trip.
9. When the work-pieces are inserted, the center line should be coaxial, no offset, in case there are external force generated on gripping jaw. When testing, it is specially required that the manual operation should be reduced, the pressure should be used to run it at a low speed, and guarantee the safety and no impact.
10. Please use the flow control valve to adjust the opening and closing speed of gripping jaw if too fast.
11. People can not enter the movement path of air gripper and articles can not be placed on the path too.
12. Before removing the air gripper, please confirm that it is out of working state, and then discharge of compressed air.

Air gripper(180° open/close type)

HFR Series

Symbol

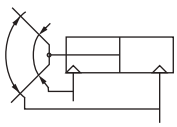

Product feature

1. open/close type, simplify the gripping action.
2. A sheet metal is installed between the finger and body to reduce abrasion and extend the service life.
3. Dust proof is designed in the finger part, which is applicable to special working environment.
4. All series are all attached with magnet.
5. Many mounting types to be choosed.

Inner structure and material of major parts

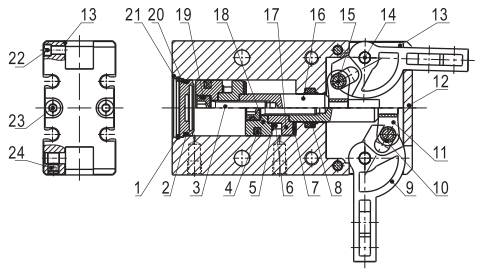

NO.	Item	Material	NO.	Item	Material
1	C clip	Spring steel	12	Front cover	Aluminum alloy
2	O-ring	NBR	13	Sheet metal	Stainless steel
3	Countersink screw	Carbon steel	14	Pin	Stainless steel
			15	Pin	Stainless steel
4	Piston seal	NBR	16	Piston rod	Stainless steel
5	Magnet washer	NBR	17	Magnet holder	Aluminum alloy
6	Magnet	Sintered metal (Neodymium-iron-ioron)	18	Piston	Aluminum alloy
			19	O-ring	NBR
7	Bumper	TPU	20	Back cover	Aluminum alloy
8	Rod packing	NBR	21	Body	Aluminum alloy
9	Gripping jaws	Stainless steel	22	Pin	Stainless steel
10	Pin sheath	Stainless steel	23	Countersink screw	Carbon steel
11	Push block	Stainless steel	24	Countersink screw	Carbon steel

Example

Screw down

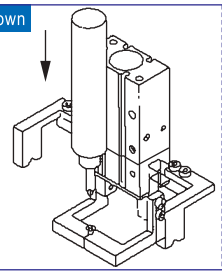

Clamping cable

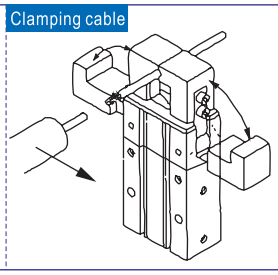

Specification

Bore size (mm)	10	16	20	25	32
Acting type	Double acting				
Fluid	Air(to be filtered by 40 μ m filter element)				
Operating pressure	0.15~0.7MPa(21~100psi)(1.5~7.0bar)				
Temperature ℃	-10~70				
Lubrication	Cylinder: Not required; Gripper jaws: Lubricate grease				
Cushion type	Bumper				
Max. frequency	60(c.p.m)				
Repeatability	± 0.2mm				
Gripping force ①	0.16N.m	0.55N.m	1.10N.m	2.30N.m	5.00N.m
Open or close angle	Open: -2° ~ -5° Close: 180° ± 2°				
Port size	M5 × 0.8				
Sensor switches ②	DS1-H				

① The gripping force is the value when the operating pressure is 0.5Mpa.
② Sensor switch should be ordered additionally, please refer to P381~402 for detail of sensor switch.

Ordering code

HFR 20 □

Model
HFR: 180° open/close air gripper

Bore size
10: Φ10mm
16: Φ16mm
20: Φ20mm
25: Φ25mm
32: Φ32mm

Mounting type
Blank: Mounting through tapped holes

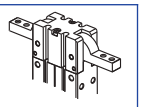

N: Mounting through holes (tapped in open/close direction)

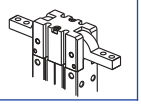

① HFR series are all attached with magnet.

Dimensions

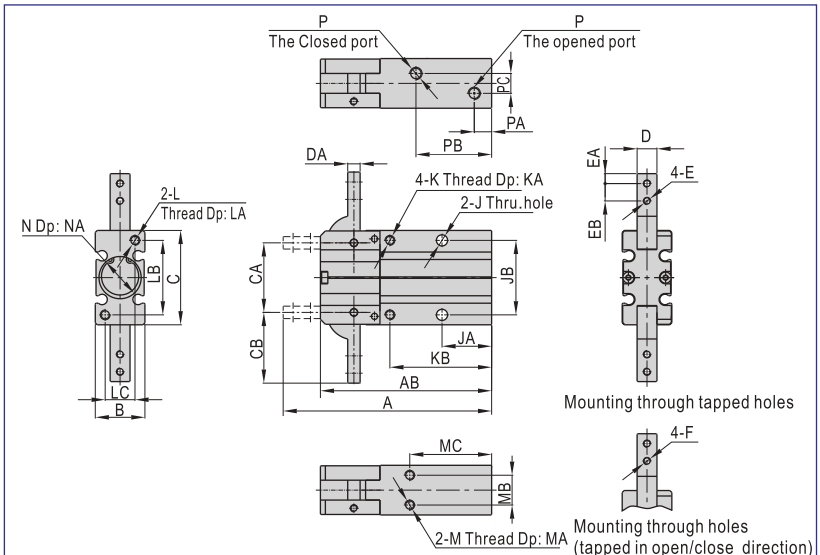

Model\Item	A	AB	B	C	CA	CB	D	DA	E	F	EA	EB
10	71	58	15	30	22	23.5	6	4	M3 × 0.5	Φ3.3	3	6
16	84	69	20	38	28	28.5	8	5	M3 × 0.5	Φ3.3	4	7
20	106	86	26	48	36	37	10	8	M4 × 0.7	Φ4.5	5	9
25	131	107	30	58	45	45	12	10	M5 × 0.8	Φ5.5	6	12
32	158.5	122	40	72	55	62.5	14	12	M6 × 1.0	Φ6.5	9	16

Model\Item	J	JA	JB	K	KA	KB	L	LA	LB	LC
10	Φ3.3	18	24	M3 × 0.5	6	35	M3 × 0.5	6	24	9
16	Φ4.5	20	30	M4 × 0.7	8	41	M4 × 0.7	8	30	12
20	Φ5.5	25	36	M5 × 0.8	10	50	M5 × 0.8	10	38	16
25	Φ6.5	30	42	M6 × 1.0	12	60	M6 × 1.0	12	46	18
32	Φ6.5	35	46	M6 × 1.0	12	64	M6 × 1.0	14	46	26

Model\Item	M	MA	MB	MC	N	NA	P	PA	PB	PC
10	M3 × 0.5	4	9	30	$\Phi 11\ ^{+0.05}_{0}$	1.5	M5 × 0.8	7	28.5	3
16	M4 × 0.7	5	12	33	$\Phi 17\ ^{+0.05}_{0}$	1.5	M5 × 0.8	7	30.5	8
20	M5 × 0.8	8	14	42	$\Phi 21\ ^{+0.05}_{0}$	1.5	M5 × 0.8	8	38.5	12
25	M6 × 1.0	10	16	50	$\Phi 26\ ^{+0.05}_{0}$	1.5	M5 × 0.8	8	48	14
32	M6 × 1.0	12	26	59	$\Phi 34\ ^{+0.05}_{0}$	2	M5 × 0.8	9	56	18

How to select product

1. Confirmation of effective gripping force
   1.1) Though the coefficient of friction between the attachments and the workpiece is different, select a gripping force which is 10 to 20 times greater than the workpiece weight.
   1.2) If high acceleration or impact forces are encountered during motion, a further margin of safety should be considered.
   Example: When the workpiece weight is 0.05 and the gripping point distance L is 30mm, the operating pressure will be 5kgf/cm^2.
   Effective gripping force=0.05kg×20 times×9.8m/s^2=more than 10N
   Model selection: HFR16 is recommended. The effective gripping force is 17N, which is 20 times greater than the set value of gripping force.
   1.3) The finger thrust is expressed as F, when both fingers and attachments are in full contact with the workpiece as shown in the figure below.

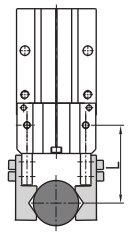

L: Gripping point

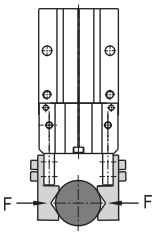

F: Single finger thrust

2. Connection between gripping force and gripping point distance

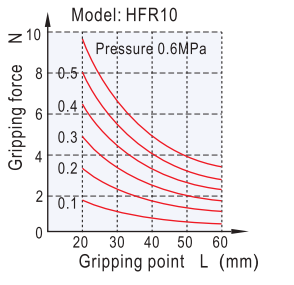

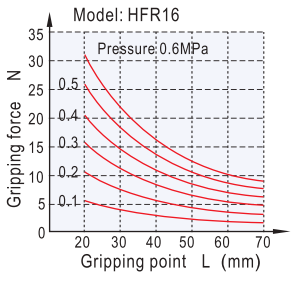

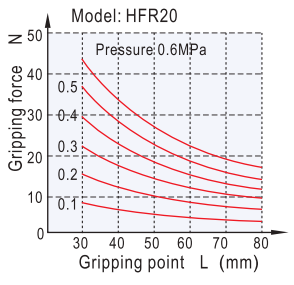

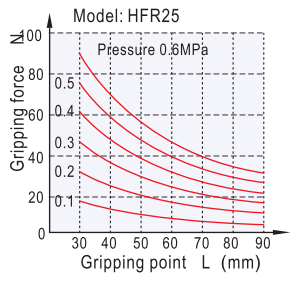

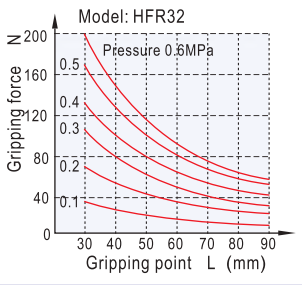

3. The selection of the gripping point
   3.1) Please select the gripping point within the limited field shown left.Over the limits, gripping jaws would be subjected to excessive torque loads, and lead to short life of the air gripper.
   3.2) In the allowable range of gripping point, it is better to design for short and light fittings. If the fittings are long and heavy, the inertia force when the finger is open and close will become larger, and the performance of gripping jaw will be degraded, at the same time it will affect the life.

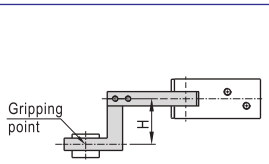

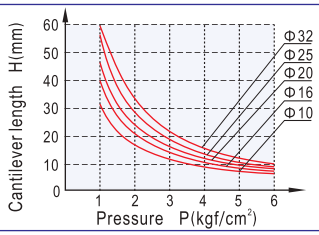

Installation and application

1. Due to the abrupt changes, the circuit pressure is low, which will lead to the decrease of the gripping force and falling of the work-pieces. In order to avoid the harm to the human body and damage to the equipment, anti-dropping device must be equipped.
2. Don't use the air gripper under strong external force and impact force.
3. When install and fix the air gripper, avoid falling down, collision and damage.
4. When fixing the gripping jaw parts, don't twist the gripping jaw.
5. There are several kinds of installation method, and the locking torgue of fastening screw must be within the prescribed torque range shown in the below chart. If the locking torque is too large, it will cause the dysfunctional. If the locking torque is too small, it will cause the position deviation and fall.

Tail installation type

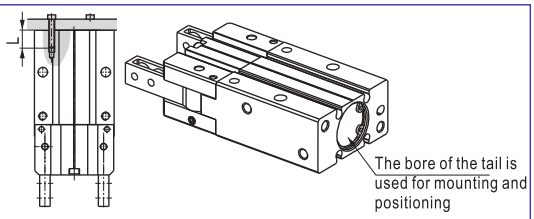

Bore size	The bolts type	Max. locking moment (Nm)	Max. screwed depth (mm)	The aperture of the positioning bore(mm)	The depth of the positioning bore(mm)
10	M3 × 0.5	1	6	Φ11H9	1.5
16	M4 × 0.7	2	8	Φ17H9	1.5
20	M5 × 0.8	4.5	10	Φ21H9	1.5
25	M6 × 1.0	7	12	Φ26H9	1.5
32	M6 × 1.0	7	14	Φ34H9	2

The installation of the front threaded hole

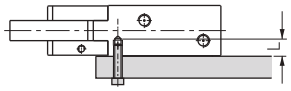

Bore size	The bolts type	Max. locking moment (Nm)	Max. screwed depth (mm)
10	M3 × 0.5	1	6
16	M4 × 0.7	2	8
20	M5 × 0.8	4.5	10
25	M6 × 1.0	7	12
32	M6 × 1.0	7	14

The installation of the front through hole

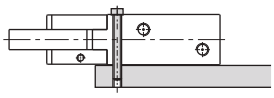

Bore size	The bolts type	Max. locking moment (Nm)
10	M3 × 0.5	1
16	M4 × 0.7	2
20	M5 × 0.8	4.5
25	M6 × 1.0	7
32	M6 × 1.0	7

Surface installation type

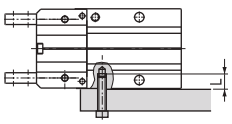

Bore size	The bolts type	Max. locking moment (Nm)	Max. screwed depth (mm)
10	M3 × 0.5	0.6	4
16	M4 × 0.7	1.5	5
20	M5 × 0.8	3.5	8
25	M6 × 1.0	6	10
32	M6 × 1.0	6	12

6. The installation method of the gripping jaw fittings
When install the gripping jaw fittings, you have to pay particular attention that you can only hold the gripping jaw by using spanner, and then lock the screws with allen wrench. Never clamp the body directly and then lock the screws, otherwise the parts will be easily damaged.

Boresize	The bolts type	Max. locking moment (Nm)
10	M3 × 0.5	0.6
16	M3 × 0.5	0.6
20	M4 × 0.7	0.8
25	M5 × 0.8	1.5
32	M6 × 1.0	3

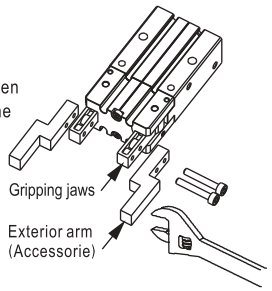

7. Other contents of installation and operation are the same with those of HFY. Refer to the "Installation and Operation" instruction of HFY.

Specification

Bore size (mm)	16	20	25	32	40	50	63
Acting type	Double acting						
Fluid	Air(to be filtered by 40 μ m filter element)						
	0.2~0.6MPa(28~87psi)(2.0~6.0bar)			0.15~0.6MPa(22~87psi)(1.5~6.0bar)			
Temperature ℃	-10~60						
Lubrication	Not required						
Repeatability mm	± 0.01						
Max. frequency	120(c.p.m)			60(c.p.m)			
Sensor switches ①	DS1-H, DS1-HL						
Port size	M3×0.5	M5×0.8					

① Sensor switch should be ordered additionally, please refer to P381~402 for detail of sensor switch.

Ordering code

HFC Y 20

Model
HFC: Air finger(Double acting, parallel type)

Bore size
16: Φ16mm
20: Φ20mm
25: Φ25mm
32: Φ32mm
40: Φ40mm
50: Φ50mm
63: Φ63mm

Finger type
I: Two grippers
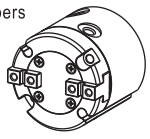
Y: Three grippers
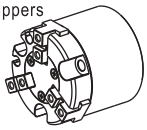
X: Four grippers
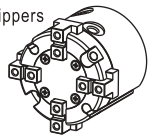

Note: HFC series are all attached with magnet.

Symbol

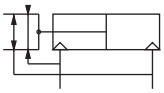

Product feature

1. Cuniform block is adopted in the interior of the air gripper to afford larger gripper force.
2. The bumper is adopted in the front of piston, which can reduce the noise of metal bump.
3. A positioning hole is attached to the bottom of the body, which can improve the precision and the consistency of repeated dismounting and positioning.
4. Precision repeating snatch which adopted roboticized equipment.
5. Kinds of series and styles for you to choice which snatch multiform workpiece.

Gripping force and stroke

Model		Gripping force per finger Effective valve(N)		Opening/Closing stroke (Both sides)(mm)
		External	Internal	
2 grippers	HFCI16	23	21	4
	HFCI20	42	37	4
	HFCI25	71	63	6
	HFCI32	123	111	8
	HFCI40	195	177	8
	HFCI50	306	280	12
	HFCI63	537	502	16
3 grippers	HFCY16	16	14	4
	HFCY20	28	25	4
	HFCY25	47	42	6
	HFCY32	82	74	8
	HFCY40	130	118	8
	HFCY50	204	187	12
	HFCY63	359	335	16
4 grippers	HFCX16	12	10	4
	HFCX20	21	19	4
	HFCX25	35	31	6
	HFCX32	61	55	8
	HFCX40	97	88	8
	HFCX50	153	140	12
	HFCX63	268	251	16

Note) The gripping force in the above table is in the working pressure of 0.5MPa, and with a gripping point of L=20mm(Φ16~Φ25) or L=30mm(Φ32~Φ63).
Add) Please refer to page 337 for the definition of "L".

Inner structure and material of major parts

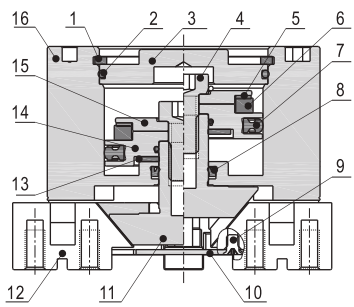

NO.	Item	Material
1	C clip	Spring steel
2	O-ring	NBR
3	Back cover	Aluminum alloy
4	Screw	Carbon steel
5	Magnet washer	NBR
6	Magnet	Sintered metal(Neodymium-iron-boron)
7	Piston seal	NBR
8	Rod packing	NBR
9	Countersink screw	Stainless steel
10	Cover blank	Stainless steel
11	Piston rod	Stainless steel
12	Gripper	Stainless steel
13	Bumper	TPU
14	Piston	Aluminum alloy
15	Magnet holder	Aluminum alloy
16	Body	Aluminum alloy

HFC

Dimensions

Two grippers

Φ16~Φ25

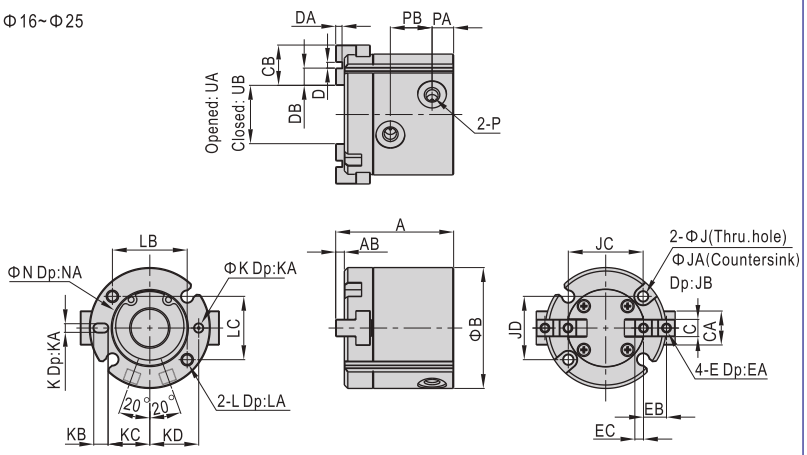

Type\Item	A	AB	B	C	CA	CB	D	DA	DB	E	EA	EB	EC	J	JA	JB	JC	JD
HFCI16	35	3	30	5 -0.01 -0.03	8	10	2 +0.04 +0.01	2 +0.2 0	4	M3×0.5	5	6	2	3.4	6	6	18	16
HFCI20	39	3	36	6 -0.01 -0.03	10	12	2 +0.04 +0.01	2 +0.2 0	5	M3×0.5	5	7	2.5	3.4	6	6	24	18
HFCI25	41	3	42	6 -0.01 -0.03	12	14	2 +0.04 +0.01	2 +0.2 0	6	M3×0.5	5	8	3	3.4	6	6	26	22

Type\Item	K	KA	KB	KC	KD	L	LA	LB	LC	N	NA	P	PA	PB	UA	UB
HFCI16	2 +0.04 +0.01	2	3	11	12.5	M4×0.7	8	18	16	17 +0.05 0	1.5	M3×0.5	7	10	14	10
HFCI20	2 +0.04 +0.01	2	3	13	14.5	M4×0.7	8	24	18	21 +0.05 0	1.5	M5×0.8	7	13	16	12
HFCI25	3 +0.04 +0.01	3	5	14.5	17	M4×0.7	8	26	22	26 +0.05 0	1.5	M5×0.8	7.5	14.5	20	14

Φ32~Φ63

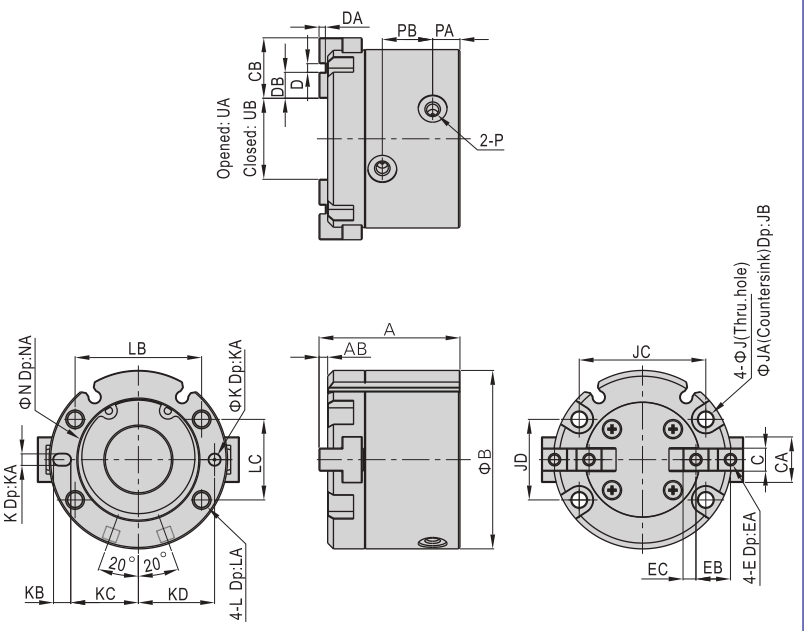

Type\Item	A	AB	B	C	CA	CB	D	DA	DB	E	EA	EB	EC	J	JA	JB	JC	JD
HFCI32	45	3	55	8 -0.01 -0.03	14	20	2 +0.04 +0.01	2+0.2 0	9	M4×0.7	8	11	4.5	4.2	8	9	38	25
HFCI40	49	3	62	8 -0.01 -0.03	16	21	3 +0.04 +0.01	2+0.2 0	9	M4×0.7	8	12	4.5	5.2	9.5	9	44	28
HFCI50	57	3	70	10 -0.01 -0.03	18	24	4 +0.04 +0.01	2+0.2 0	10	M5×0.8	9	14	5	5.2	9.5	12	52	34
HFCI63	68	4	86	12 -0.01 -0.03	24	28	6 +0.04 +0.01	3+0.2 0	11	M5×0.8	9	17	5.5	5.2	9.5	14	66	38

Type\Item	K	KA	KB	KC	KD	L	LA	LB	LC	N	NA	P	PA	PB	UA	UB
HFCI32	3 +0.04 +0.01	3	5	20.5	23	M5×0.8	10	38	25	34 +0.05 0	2	M5×0.8	8.5	16	24	16
HFCI40	4 +0.04 +0.01	4	6	23.5	26.5	M6×1.0	12	44	28	42 +0.05 0	2	M5×0.8	9.5	17.5	28	20
HFCI50	4 +0.04 +0.01	4	6	28	31	M6×1.0	12	52	34	52 +0.05 0	2	M5×0.8	9.5	21	34	22
HFCI63	5 +0.04 +0.01	5	7	34.5	38	M6×1.0	12	66	38	65 +0.05 0	2.5	M5×0.8	12	24	46	30

Three grippers

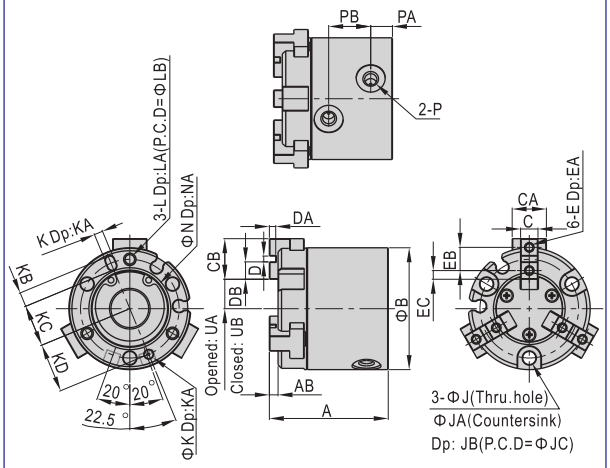

Type\Item	A	AB	B	C	CA	CB	D	DA	DB	E	EA
HFCY16	35	3	30	5 -0.01 -0.03	8	10	2 +0.04 +0.01	2 +0.2 0	4	M3×0.5	5
HFCY20	39	3	36	6 -0.01 -0.03	10	12	2 +0.04 +0.01	2 +0.2 0	5	M3×0.5	5
HFCY25	41	3	42	6 -0.01 -0.03	12	14	2 +0.04 +0.01	2 +0.2 0	6	M3×0.5	5
HFCY32	45	3	52	8 -0.01 -0.03	14	20	2 +0.04 +0.01	2 +0.2 0	9	M4×0.7	8
HFCY40	49	3	62	8 -0.01 -0.03	16	21	3 +0.04 +0.01	2 +0.2 0	9	M4×0.7	8
HFCY50	57	3	70	10 -0.01 -0.03	18	24	4 +0.04 +0.01	2 +0.2 0	10	M5×0.8	9
HFCY63	68	4	86	12 -0.01 -0.03	24	28	6 +0.04 +0.01	3 +0.2 0	11	M5×0.8	9

Type\Item	EB	EC	J	JA	JB	JC	K	KA	KB	KC	KD	L
HFCY16	6	2	3.4	6	6	25	2 +0.04 +0.01	2	3	11	12.5	M3×0.5
HFCY20	7	2.5	3.4	6	6	29	2 +0.04 +0.01	2	3	13	14.5	M3×0.5
HFCY25	8	3	4.5	8	9	34	3 +0.04 +0.01	3	5	14.5	17	M4×0.7
HFCY32	11	4.5	4.5	8	9	44	3 +0.04 +0.01	3	5	19.5	22	M4×0.7
HFCY40	12	4.5	5.5	9.5	9	53	4 +0.04 +0.01	4	6	23.5	26.5	M5×0.8
HFCY50	14	5	5.5	9.5	12	62	4 +0.04 +0.01	4	6	28	31	M5×0.8
HFCY63	17	5.5	6.6	11	14	76	5 +0.04 +0.01	5	7	34.5	38	M6×1.0

Type\Item	LA	LB	N	NA	P	PA	PB	UA	UB
HFCY16	6	25	17 +0.05 0	1.5	M3×0.5	7	10	7	5
HFCY20	6	29	21 +0.05 0	1.5	M5×0.8	7	13	8	6
HFCY25	8	34	26 +0.05 0	1.5	M5×0.8	7.5	14.5	10	7
HFCY32	8	44	34 +0.05 0	2	M5×0.8	8.5	16	12	8
HFCY40	10	53	42 +0.05 0	2	M5×0.8	9.5	17.5	14	10
HFCY50	10	62	52 +0.05 0	2	M5×0.8	9.5	21	17	11
HFCY63	12	76	65 +0.05 0	2.5	M5×0.8	12	24	23	15

Four grippers

Φ16~Φ25

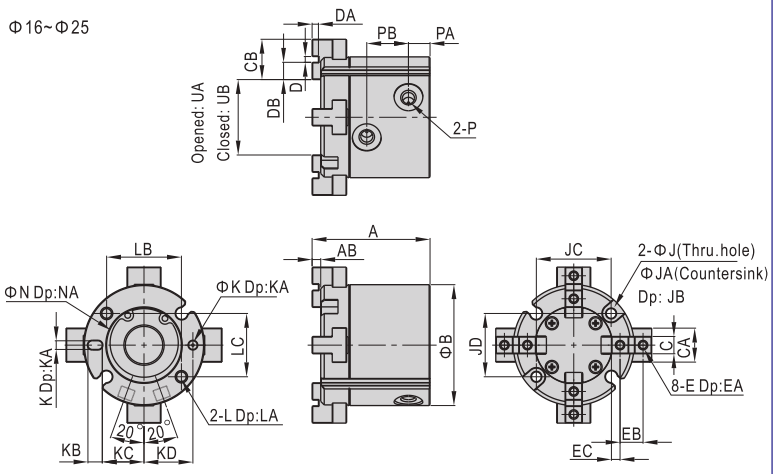

Type\Item	A	AB	B	C	CA	CB	D	DA	DB	E	EA	EB	EC	J	JA	JB	JC	JD
HFCX16	35	3	30	$5^{-0.01}_{-0.03}$	8	10	$2^{+0.04}_{+0.01}$	$2^{+0.2}_{0}$	4	M3×0.5	5	6	2	3.4	6	6	18	16
HFCX20	39	3	36	$6^{-0.01}_{-0.03}$	10	12	$2^{+0.04}_{+0.01}$	$2^{+0.2}_{0}$	5	M3×0.5	5	7	2.5	3.4	6	6	24	18
HFCX25	41	3	42	$6^{-0.01}_{-0.03}$	12	14	$2^{+0.04}_{+0.01}$	$2^{+0.2}_{0}$	6	M3×0.5	5	8	3	3.4	6	6	26	22

Type\Item	K	KA	KB	KC	KD	L	LA	LB	LC	N	NA	P	PA	PB	UA	UB
HFCX16	$2^{+0.04}_{+0.01}$	2	3	11	12.5	M4×0.7	8	18	16	$17^{+0.05}_{0}$	1.5	M3×0.5	7	10	17	13
HFCX20	$2^{+0.04}_{+0.01}$	2	3	13	14.5	M4×0.7	8	24	18	$21^{+0.05}_{0}$	1.5	M5×0.8	7	13	19	15
HFCX25	$3^{+0.04}_{+0.01}$	3	5	14.5	17	M4×0.7	8	26	22	$26^{+0.05}_{0}$	1.5	M5×0.8	7.5	14.5	26	20

Φ32~Φ63

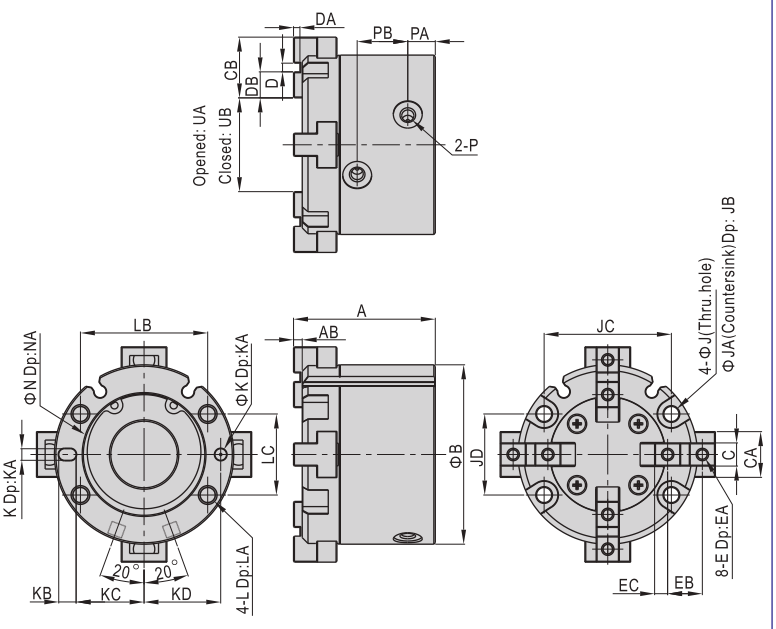

Type\Item	A	AB	B	C	CA	CB	D	DA	DB	E	EA	EB	EC	J	JA	JB	JC	JD
HFCX32	45	3	55	$8^{-0.01}_{-0.03}$	14	20	$2^{+0.04}_{+0.01}$	$2^{+0.2}_{0}$	9	M4×0.7	8	11	4.5	4.2	8	9	38	25
HFCX40	49	3	62	$8^{-0.01}_{-0.03}$	16	21	$3^{+0.04}_{+0.01}$	$2^{+0.2}_{0}$	9	M4×0.7	8	12	4.5	5.2	9.5	9	44	28
HFCX50	57	3	70	$10^{-0.01}_{-0.03}$	18	24	$4^{+0.04}_{+0.01}$	$2^{+0.2}_{0}$	10	M5×0.8	9	14	5	5.2	9.5	12	52	34
HFCX63	68	4	86	$12^{-0.01}_{-0.03}$	24	28	$6^{+0.04}_{+0.01}$	$3^{+0.2}_{0}$	11	M5×0.8	9	17	5.5	5.2	9.5	14	66	38

Type\Item	K	KA	KB	KC	KD	L	LA	LB	LC	N	NA	P	PA	PB	UA	UB
HFCX32	$3^{+0.04}_{+0.01}$	3	5	20.5	23	M5×0.8	10	38	25	$34^{+0.05}_{0}$	2	M5×0.8	8.5	16	28	20
HFCX40	$4^{+0.04}_{+0.01}$	4	6	23.5	26.5	M6×1.0	12	44	28	$42^{+0.05}_{0}$	2	M5×0.8	9.5	17.5	32	24
HFCX50	$4^{+0.04}_{+0.01}$	4	6	28	31	M6×1.0	12	52	34	$52^{+0.05}_{0}$	2	M5×0.8	9.5	21	38	26
HFCX63	$5^{+0.04}_{+0.01}$	5	7	34.5	38	M6×1.0	12	66	38	$65^{+0.05}_{0}$	2.5	M5×0.8	12	24	51	35

How to select product

Please select pneumatic finger according to the following steps:
The selection of the effective gripping force → the confirmation of the gripping point.

1. The selection of the gripping force

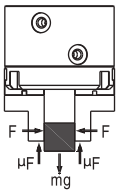

The gripping work-pieces shown above, on the impact condition of ordinary handling state, taking safety coefficient a=4, have a gripping force that is more than 10-20 times of the mass of the gripped objects.

μ =0.2	μ =0.1
$F=\frac{mg}{2\times0.2}\times4$ $=10\times mg$	$F=\frac{mg}{2\times0.1}\times4$ $=20\times mg$
10 times of the mass of the gripped objects	20 times of the mass of the gripped objects

The work-pieces as shown in the left :
n: number of gripper
F: Gripping force (N)
μ : friction coefficient between fittings and work-pieces.
m: mass of work-pieces
g: acceleration of gravity (=9.8m/s²)

The condition that the work-pieces won't drop is: $n\times\mu F>mg$

so: $F>\frac{mg}{n\times\mu}$

Safety coefficient is a, so F is:

$F=\frac{mg}{n\times\mu}\times a$

Note) If the friction coefficient μ >0.2, for safety, please also select clamping force according to the principle of 10~20 times of the mass of the clamped objects. As for large acceleration and shock, it requires for greater safety coefficient.

1.1) The actual gripping force must be within the effective gripping forces of different pneumatic fingers specifications shown in the below chart.

Closed gripping force(I Type)

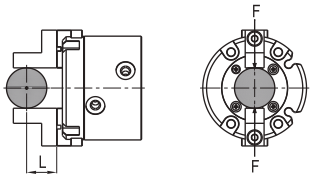

HFCI16

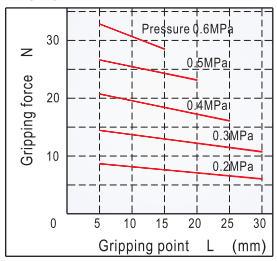

HFCI20

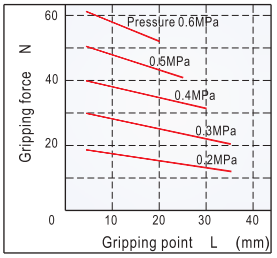

HFCI25

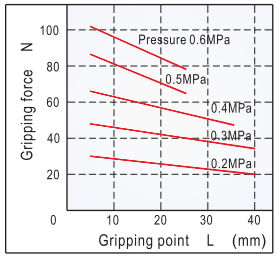

HFCI32

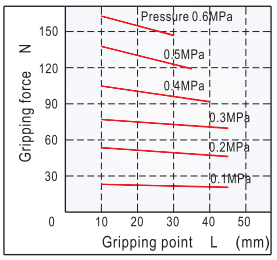

HFCI40

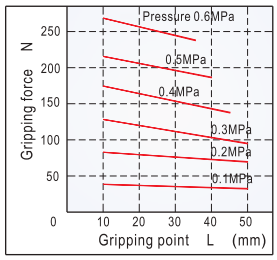

HFCI50

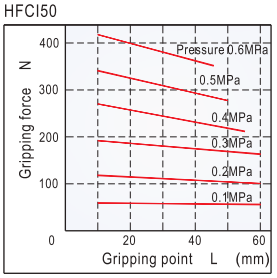

HFCI63

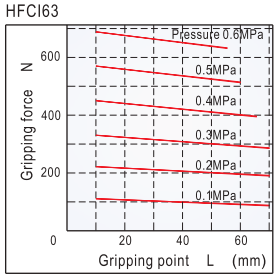

Opened gripping force(I Type)

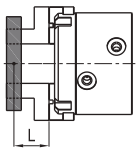

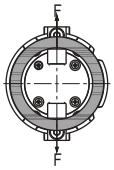

HFCI16

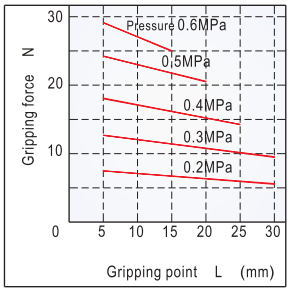

HFCI20

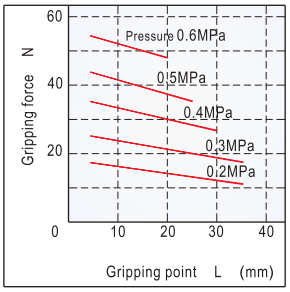

HFCI25

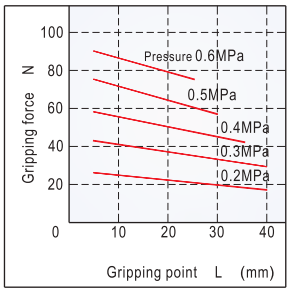

HFCI32

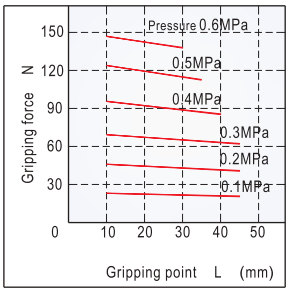

HFCI40

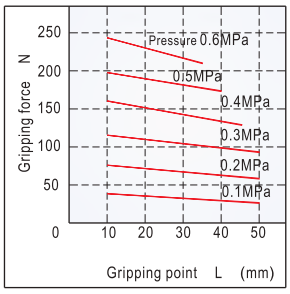

HFCI50

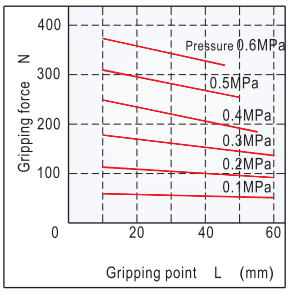

HFCI63

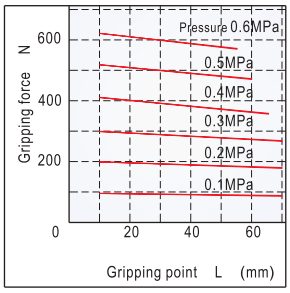

Closed gripping force(Y Type)

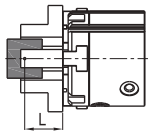

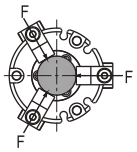

HFCY16

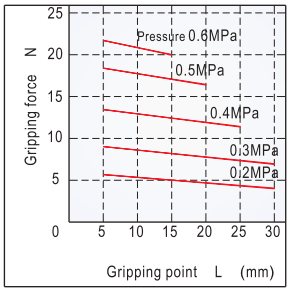

HFCY20

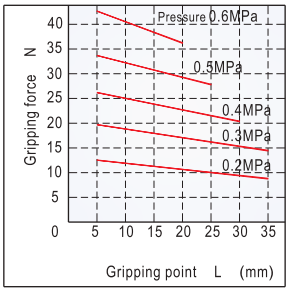

HFCY25

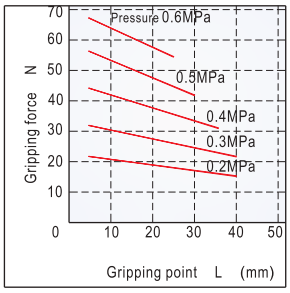

HFCY32

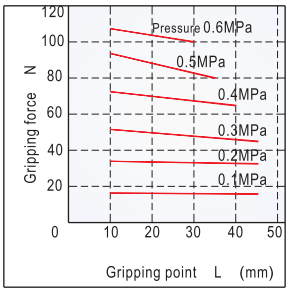

HFCY40

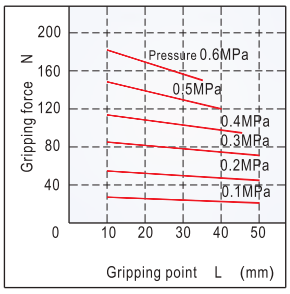

HFCY50

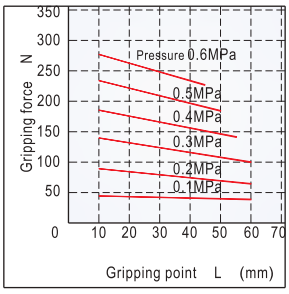

HFCY63

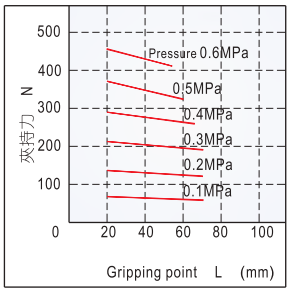

Opened gripping force(Y Type)

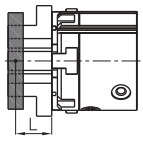

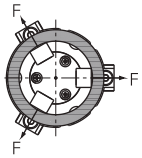

HFCY16

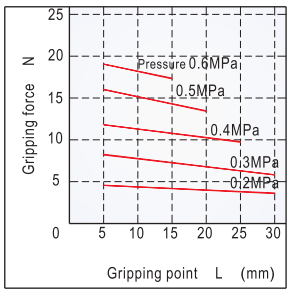

HFCY20

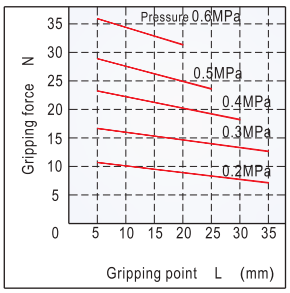

HFCY25

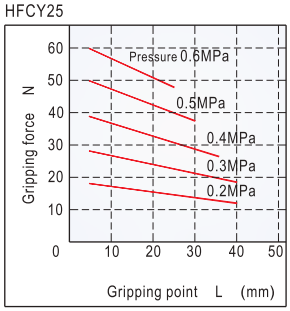

HFCY32

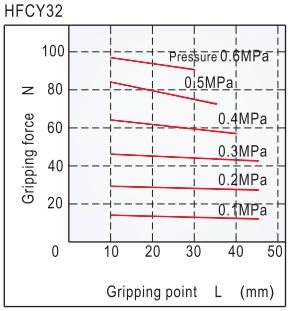

HFCY40

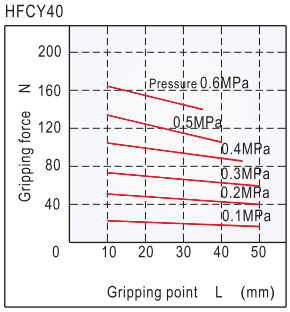

HFCY50

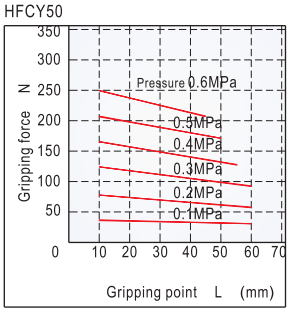

HFCY63

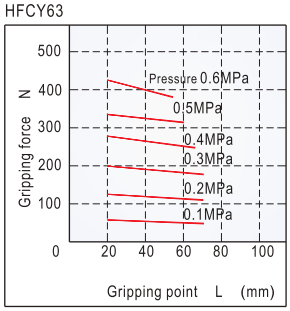

Closed gripping force(X Type)

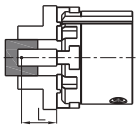

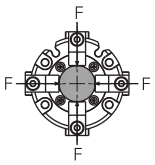

HFCX16

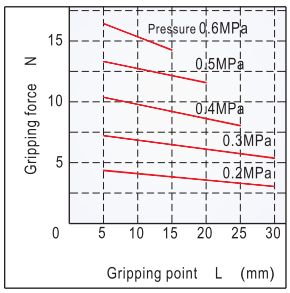

HFCX20

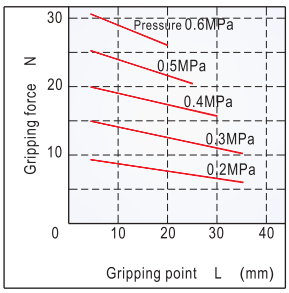

HFCX25

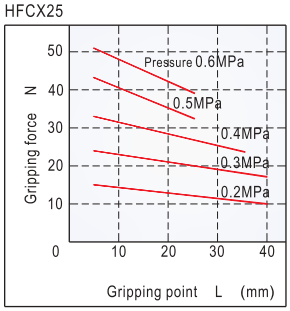

HFCX32

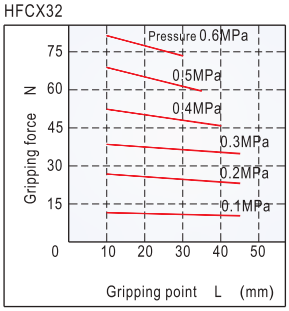

HFCX40

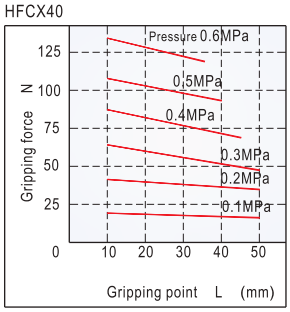

HFCX50

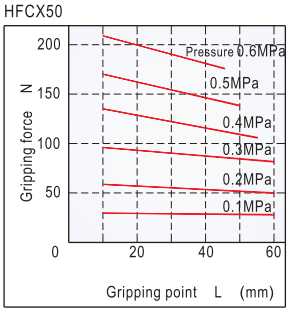

HFCX63

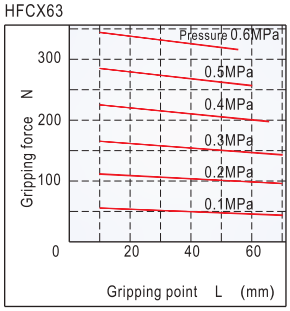

Opened gripping force(X Type)

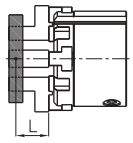

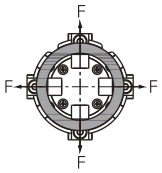

HFCX16

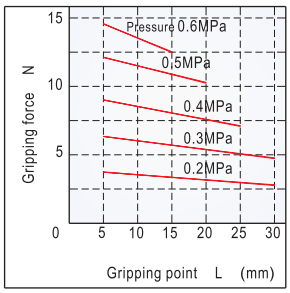

HFCX20

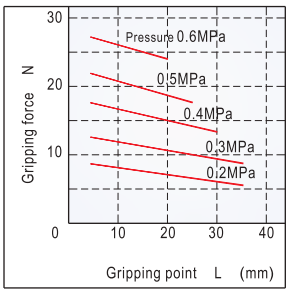

HFCX25

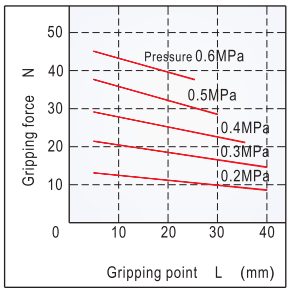

HFCX32

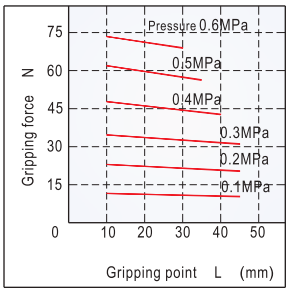

HFCX40

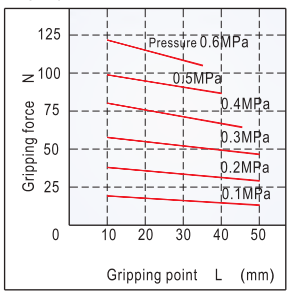

HFCX50

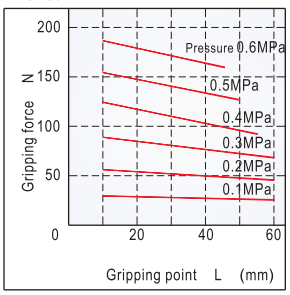

HFCX63

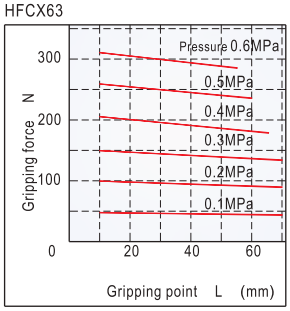

Installation and application

1. Due to the abrupt changes, the circuit pressure is low, which will lead to the decrease of the gripping force and falling of the work-pieces. In order to avoid the harm to the human body and damage to the equipment, anti-dropping device must be equipped.
2. Don't use the air gripper under strong external force and impact force.
3. When install and fix the air gripper, avoid falling down, collision and damage.
4. When fixing the gripping jaw parts, don't twist the gripping jaw.
5. There are several kinds of installation method, and the locking torgue of fastening screw must be within the prescribed torque range shown in the below chart. If the locking torque is too large, it will cause the dysfunctional. If the locking torque is too small, it will cause the position deviation and fall.

Tail installation type

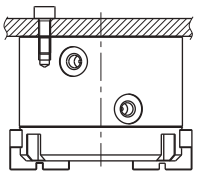

Model	Bore size	The bolts type	Max. locking moment(Nm)	Max. screwed depth(mm)	The aperture of the positioning bore(mm)	The depth of the positioning bore(mm)
HFCI HFCX	16	M4 × 0.7	2.1	8	Φ17 $^{+0.05}_{0}$	1.5
	20	M4 × 0.7	2.1	8	Φ21 $^{+0.05}_{0}$	1.5
	25	M4 × 0.7	2.1	8	Φ26 $^{+0.05}_{0}$	1.5
	32	M5 × 0.8	4.3	10	Φ34 $^{+0.05}_{0}$	2
	40	M6 × 1.0	7.3	12	Φ42 $^{+0.05}_{0}$	2
	50	M6 × 1.0	7.3	12	Φ52 $^{+0.05}_{0}$	2
	63	M6 × 1.0	7.3	12	Φ65 $^{+0.05}_{0}$	2.5
HFCY	16	M3 × 0.5	0.88	6	Φ17 $^{+0.05}_{0}$	1.5
	20	M3 × 0.5	0.88	6	Φ21 $^{+0.05}_{0}$	1.5
	25	M4 × 0.7	2.1	8	Φ26 $^{+0.05}_{0}$	1.5
	32	M4 × 0.7	2.1	8	Φ34 $^{+0.05}_{0}$	2
	40	M5 × 0.8	4.3	10	Φ42 $^{+0.05}_{0}$	2
	50	M5 × 0.8	4.3	10	Φ52 $^{+0.05}_{0}$	2
	63	M6 × 1.0	7.3	12	Φ65 $^{+0.05}_{0}$	2.5

The installation of the front through hole

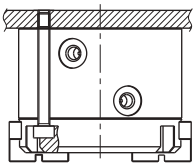

Model	Bore size	The bolts type	Max. locking moment(Nm)
HFCI HFCX	16	M3 × 0.5	0.88
	20	M3 × 0.5	0.88
	25	M3 × 0.5	0.88
	32	M4 × 0.7	2.1
	40	M5 × 0.8	4.3
	50	M5 × 0.8	4.3
	63	M5 × 0.8	4.3
HFCY	16	M3 × 0.5	0.88
	20	M3 × 0.5	0.88
	25	M4 × 0.7	2.1
	32	M4 × 0.7	2.1
	40	M5 × 0.8	4.3
	50	M5 × 0.8	4.3
	63	M6 × 1.0	7.3

6. The installation method of the gripping jaw fittings
When install the gripping jaw fittings, you have to pay particular attention that you can only hold the gripping jaw by using spanner, and then lock the screws with allen wrench. Never clamp the body directly and then lock the screws, otherwise the parts will be easily damaged.

Install the gripping jaw fittings

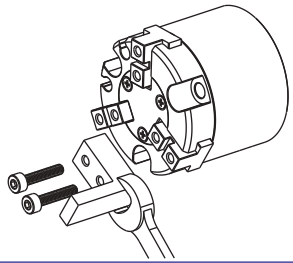

Bore size	The bolts type	Max. locking moment(Nm)
16	M3 × 0.5	0.59
20	M3 × 0.5	0.59
25	M3 × 0.5	0.59
32	M4 × 0.7	1.4
40	M4 × 0.7	1.4
50	M5 × 0.8	2.8
63	M5 × 0.8	2.8

Product series

Series name	Acting type	Bore size
ACK Series	Double acting	25 32 40 50 63
ACKD Series		
Page: 342		

Installation and application

1. Clamping operation must be carried out within the clamping stroke and can not be performed within the swivel stroke.
2. Clamping plane must be vertical to the cylinder axes. After the components are clamped, don't move the components.
3. Before the cylinder is connected to pipeline, sundries in the pipe must be eliminated to prevent impurities entering the cylinder.
4. The medium used by cylinder shall be filtered to 40 μ m or below.
5. If the cylinder is dismantled and stored for a long time, please conduct anti-rust treatment to the surface. Anti-dust cap shall be added in inlet and outlet ports. The end of piston shall be coated with anti-rust oil.

Theoretical clamping force

Unit：Newton(N)

Bore size (mm)	Rod size (mm)	Operating pressure(MPa)						
		0.1	0.2	0.3	0.4	0.5	0.6	0.7
25	14	-	67.4	101.1	134.8	168.5	202.2	235.9
32	16	60.3	120.6	181.0	241.3	301.6	361.9	422.2
40	16	105.6	211.1	316.7	422.2	527.8	633.3	738.9
50	20	164.9	329.9	494.8	659.7	824.7	989.6	1154.5
63	20	280.3	560.6	840.9	1121.2	1401.5	1681.9	1962.2

Specification

Bore size(mm)	25	32	40	50	63
Acting type	Double acting				
Fluid	Air(to be filtered by 40 μ m filter element)				
Operating pressure	0.15~1.0MPa(22~145psi)				
Proof pressure	1.5MPa(215psi)				
Temperature ℃	-20~80				
Speed range mm/s	50~200				
Stroke tolerance	$^{+1.0}_{0}$				
Rotary angle tolerance	± 1.5°				
Cushion type ①	No cushion				
Port size ②	M5 × 0.8	1/8"			

① If there is no buffering device, exhaust throttle shall be added to achieve buffering effect.
② G thread and NPT thread are available.

Symbol

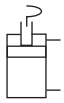

Stroke

Bore size(mm)	Stroke type	90°	180°	Total stroke (90° /180°)
25	Rotation stroke	14	20	26
32	Clamping stroke	12	6	26
40	Rotation stroke	15	21	27
	Clamping stroke	12	6	27
50	Rotation stroke	15	21	29
63	Clamping stroke	14	8	29

Product feature

1. The material of seals guarantees the reliable performance of the cylinder that is used under various conditions.
2. Three-slot guide structure leads to high guide precision.
3. There are single and double side clamping fingers can be selected (90°).
4. Levorotatory and dextrorotary are available; 90°and 180°.
5. The material of piston rod is made from special alloy steel, which has longer life after heat treatment.

Ordering code

ACK L 25 × 90 G

Model
ACK: Twist clamp cylinder(Double acting type)
ACKD: Twist clamp cylinder (Double push plate type, only for 90°)

Thread type ①
G: G
T: NPT

Rotary angle
90: 90°
180: 180°

Rotary direction
L: Push and turn left
When the piston of cylinder moves downward, the swivel arms moves anticlockwise, this is called levorotatory.

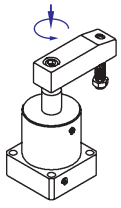

R: Push and turn right
When the piston of cylinder moves downward, the swivel arms moves clockwise, this is called dextrorotary.

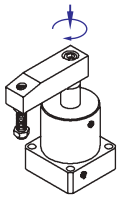

Bore size
25 32 40 50 63

① When the thread is standard, the code is blank.

ACK

Inner structure and material of major parts

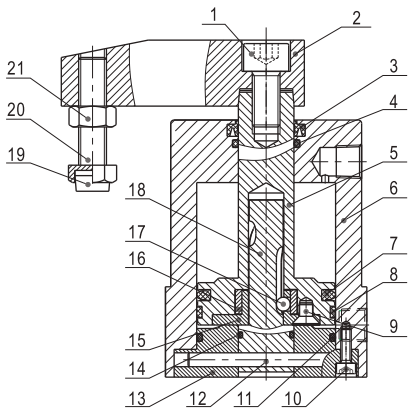

NO.	Item	Material	NO.	Item	Material
1	Screw	Carbon steel	12	Fixed pin	S45C
2	Rocker	Carbon steel	13	Back cover	Aluminum alloy
3	Rod packing	NBR	14	O–ring	NBR
4	O–ring	NBR	15	Push block	SCr440
5	Piston rod	S45C	16	Bushing	SCr440
6	Body	Aluminum alloy	17	Steel ball	Carbon steel
7	Piston seal	NBR	18	Rotary axis	SCr440
8	Wear ring	Wear resistant material	19	Bumper	PTFE
9	Screw	Carbon steel	20	Screw	Carbon steel
10	Screw	Carbon steel	21	Nut	Carbon steel
11	O–ring	NBR			

Installation and application

Rocking shaft initial point adjustment

According to the actual need, loosening screw, may adjust the rocking shaft initial point.

Note: When assemble or disassemble the rocker by spanner and allen wrench; don't hold the body to assemble or disassemble rocker, it may damage the cylinder.

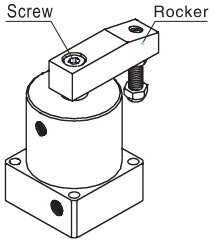

How to select the fitting for body's port

When ACK series with 180° rotation or ACKD is selected,miniature air fittings should be used to minimise obstruction.

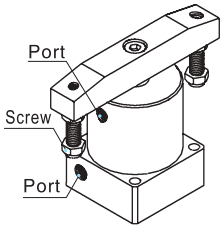

Dimensions

ACK

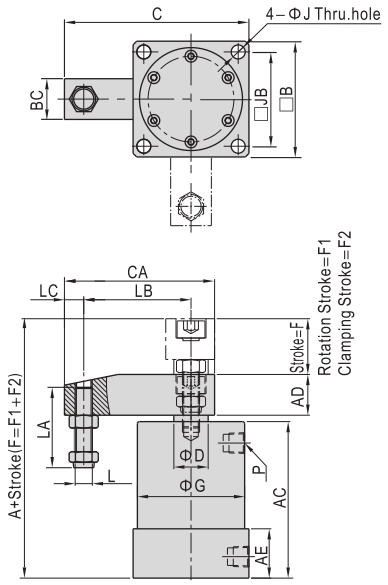

ACKD

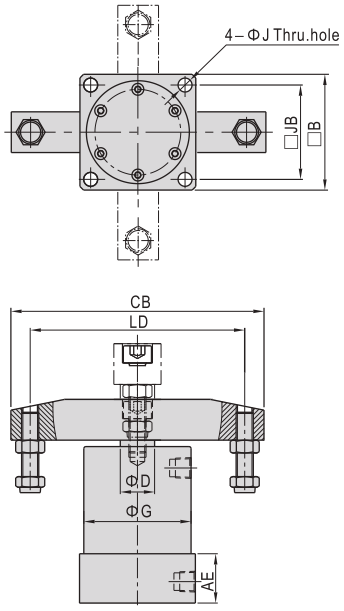

Bore size\Item	A	AC	AD	AE	B	BC	C	CA	CB	D	F(90° /180°)	F1(90°)
25	85	65	16	23	40	16	58	48	76	14	26	14
32	95	73	19	23	54	19	86	70	118	16	26	14
40	97	74	19	26	58	19	88	70	118	16	27	15
50	109.5	80	25.5	26	68	25.5	114	93	160	20	29	15
63	115.5	86	25.5	30	82	25.5	121	93	160	20	29	15

Bore size\Item	F1(180°)	F2(90°)	F2(180°)	G	J	JB	L	LA	LB	LC	LD	P
25	20	12	6	35	4.5	30	M6×1.0	29.5	30	8	60	M5×0.8
32	20	12	6	50	6.5	44	M8×1.25	37.5	50	9	100	1/8"
40	21	12	6	55	6.5	48	M8×1.25	37.5	50	9	100	1/8"
50	21	14	8	60	8.5	55	M10×1.5	45	70	10	140	1/8"
63	21	14	8	70	8.5	64	M10×1.5	45	70	10	140	1/8"

How to select product

1. When arms are to be made separately, their length and weight should be within the following range.

2. Allowable bending moment:
Use the arm length and operating pressure within graph(1) for allowable bending moment loaded piston rod.

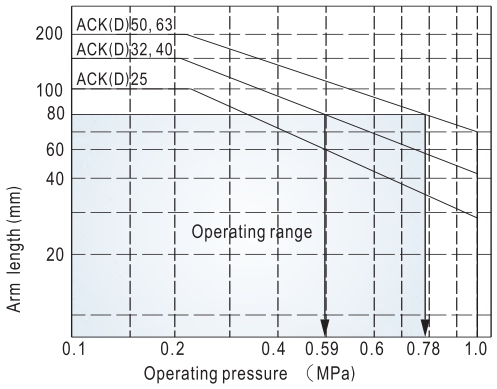

Example: When arm length is 80mm, pressure should be less than
ACK32/40:0.59MPa
ACK50/63:0.78MPa

3. Moment of inertia:
When the arm is long and heavy, damage of internal parts may be caused due to inertia. Use the inertia moment and cylinder speed within graph(2) based on arm requirments.

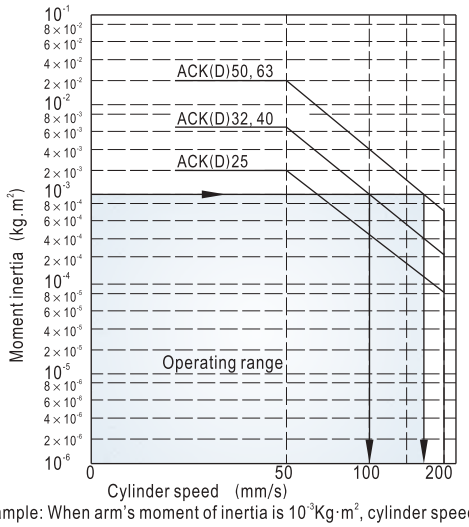

Example: When arm's moment of inertia is 10^{-3}Kg·m², cylinder speed should be less than
ACK32/40:100mm/s
ACK50/63:170mm/s
Note) The average speed of piston=the highest speed of piston/1.6

4. Moment of inertia of cylinder's arm when rotating based on its rotary axis, shown in graph(3).

Model	Moment of inertia(Kg·m²)
ACK25 with single arm	2.006×10^{-5}
ACK25 with double arms	7.651×10^{-5}
ACK32\40 with single arm	1.271×10^{-4}
ACK32\40 with double arms	4.148×10^{-4}
ACK50\63 with single arm	9.614×10^{-4}
ACK50\63 with double arms	1.888×10^{-3}

5. Calculation reference:
5.1 Moment of inertia of arm (I1) : Refer to the graph(3) after the cylinder bore diameter is determined.
5.2 Moment of inertia of jig (I2) : According to shape of the jig and the next item 6 "Calculation for moment of inertia", pick out a proper formula for calculation. The jig shown on the right graph is a cylinder ,its formula of moment of inertia is:
$I_2=(m_2*D*D)/8+m_2*L*L$
When ACK32 is selected: L=0.05m(arm length);
If D=0.04m m_2=0.4kg

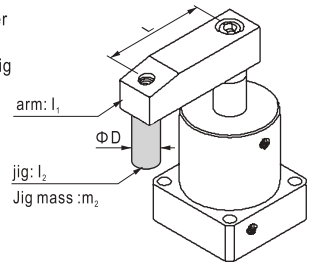

From graph(3): $I_1=1.271\times10^{-4}$(Kg·m²)
By Calculation : $I_2=(m_2*D*D)/8+m_2*L*L=(0.4*0.04*0.04)/8+0.4*0.05*0.05$
$=10.8\times10^{-4}$(Kg·m²)
Total value: $I=I_1+I_2=12.071\times10^{-4}=1.2071\times10^{-3}$(Kg·m²)
According to graph(2),the highest speed of the cylinder should be less than 95 mm/s; According to graph(1),it can be used under a pressure of 0.9Mpa. The average speed of piston=the highest speed of piston/1.6=59 mm/s.

6. Calculation for moment of inertia

Diagram	Calculation formula of moment of inertia
1. Thin bar Position of rotary axis:Vertical to the bar and through the end	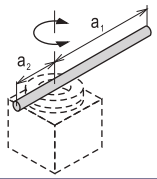 $I=\frac{m_1a_1^2+m_2a_2^2}{3}$
2. Thin bar Position of rotary axis:Vertical to the bar and through the center of gravity	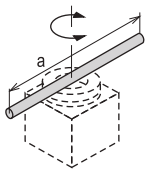 $I=\frac{ma^2}{12}$
3. Load at the end of lever arm	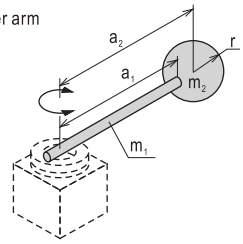 $I=m_1\times\frac{a_1^2}{3}+m_2\times a_2^2+k$ $k=m_2\times\frac{2r^2}{5}$
4. Thin rectangular plate (Rectangular parallelepiped) Position of rotary axis:Parallel to side b and through the center of gravity	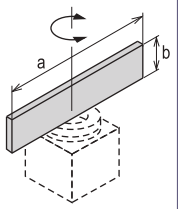 $I=\frac{ma^2}{12}$
5. Thin rectangular plate (Rectangular parallelepiped) Position of rotary axis:Vertica to the plate and through the end	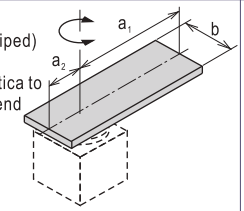 $I=m_1\times\frac{4a_1^2+b^2}{12}+m_2\times\frac{4a_2^2+b^2}{12}$
6. Thin rectangular plate (Rectangular parallelepiped) Position of rotary axis:Through the center of gravity and vertical to the plate(Same as also thickrectanglaur plate)	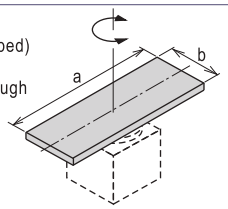 $I=\frac{ma^2+mb^2}{12}$

Product series

Series name	Mounting type	Acting type	Bore size	Collocation of sensor switch
	Basic FB			CS1–J DS1–J CS1–G DS1–G
QCK Series	● ●	Double acting	12 16 20 25 32 40 50 63	● ● ● ● (12) ● ● ● ● (16) ● ● ● ● (20) ● ● ● ● (25) ● ● ● ● (32) ● ● ● ● (40) ● ● ● ● (50) ● ● ● ● (63)
Page 346	347			381

Installation and application

1. Dirty substances in the pipe must be eliminated before cylinder is connected with pipeline to prevent the entrance of impurities into the cylinder.
2. The medium used by cylinder shall be filtered to 40 μ m or below.
3. Anti-freezing measure shall be adopted under low temperature environment to prevent moisture freezing.
4. If the cylinder is dismantled and stored for a long time, please conduct anti-rust treatment to the surface. Anti-dust jam cap shall be added in air inlet and outlet ports.
5. To insure the life-span of cylinder and jig, please use flow control valve to control the speed of cylinder.

Criteria for selection: Cylinder thrust

Unit：Newton(N)

Bore size (mm)	Rod size (mm)	Acting type	Operating pressure(MPa)							
			0.1	0.2	0.3	0.4	0.5	0.6	0.7	0.8
12	6	IN(Clamp)	8.5	17.0	25.4	33.9	42.4	50.9	59.4	67.9
		OUT(Release)	11.3	22.6	33.9	45.2	56.5	67.9	79.2	90.4
16	8	IN(Clamp)	15.1	30.2	45.2	60.3	75.4	90.5	105.6	120.6
		OUT(Release)	20.1	40.2	60.3	80.4	100.5	120.6	140.7	160.8
20	12	IN(Clamp)	20.1	40.2	60.3	80.4	100.5	120.6	140.7	160.8
		OUT(Release)	31.4	62.8	94.2	125.7	157.1	188.5	219.9	251.3
25	12	IN(Clamp)	37.8	75.6	113.3	151.1	188.9	226.7	264.4	302.2
		OUT(Release)	49.1	98.2	147.3	196.3	245.4	294.5	343.6	392.7
32	16	IN(Clamp)	60.3	120.6	181.0	241.3	301.6	361.9	422.2	482.5
		OUT(Release)	80.4	160.8	241.3	321.7	402.1	482.5	563.0	643.4
40	16	IN(Clamp)	105.6	211.1	316.7	422.2	527.8	633.3	738.9	844.5
		OUT(Release)	125.7	251.3	377.0	502.7	628.3	754.0	879.6	1005.3
50	20	IN(Clamp)	164.9	329.9	494.8	659.7	824.7	989.6	1154.5	1319.5
		OUT(Release)	196.3	392.7	589.0	785.4	981.7	1178.1	1374.4	1570.8
63	20	IN(Clamp)	280.3	560.6	840.9	1121.2	1401.5	1681.9	1962.2	2242.5
		OUT(Release)	311.7	623.4	935.2	1246.9	1558.6	1870.3	2182.1	2493.8

Specification

Bore size(mm)	12	16	20	25	32	40	50	63
Acting type	Double acting							
Fluid	Air(to be filtered by 40 μ m filter element)							
Operating pressure	0.15~1.0MPa(23~145psi)(1.5~10bar)							
Proof pressure	1.5MPa(215psi)(15bar)							
Temperature ℃	-20~80							
Speed range mm/s	50~200							
Rotation angle	90° ± 10°							
Rotation direction	Turn left or turn right							
Rotation stroke mm	7.5			9.5		15		19
Clamping stroke mm	10 20		10 20 30			10 20 30 50		
Stroke tolerance	$^{+1.0}_{0}$							
Cushion type	Bumper							
Port size ①	M5 × 0.8					1/8"		1/4"

① G thread and NPT thread are available.

Add) QCK series are all attached with magnet, please refer to Page 381~402 for the specific content of sensor switch.

Symbol

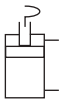

Product feature

1. It can be used on welding fixfure, the QPQ surface treatment prevent piston rod damage by welding slag; better than chrome plated piston rod.
2. The front cover with stainless steel dust scraping ring, can keep the dust and welding slag out, and protect cylinder internal parts.
3. Strong magnet is optioned for Φ32 ~ Φ63 bore size , which can be used in high magnetic fields.
4. The mounting dimension of body is the same as ACQ series, can use ACQ series' accessories.

Inner structure and material of major parts

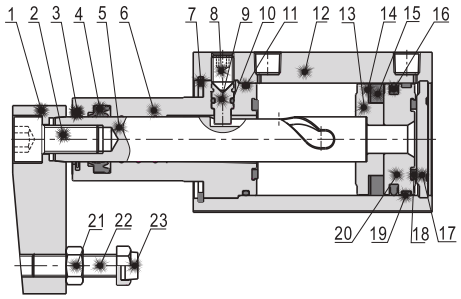

NO.	Item	Material
1	Rocker	Carbon steel
2	Screw	Carbon steel
3	Dust scraping ring	No(Φ12, Φ16)\Stainless steel(Others)
4	Front cover packing	NBR
5	Piston rod	SCr440
6	Front cover	Aluminum alloy
7	C Clip	Spring steel
8	Screw	Carbon steel
9	Operating screw	SCr440
10	O−ring	NBR
11	O−ring	NBR
12	Body	Aluminum alloy
13	Magnet holder	Brass(Φ12, Φ16)\Aluminum alloy(Others)
14	Magnet washer	NBR
15	Magnet	Sintered metal(Neodymium-iron-boron(Φ12~Φ25)
		Plastic(Others)
16	Piston seal	NBR
17	Back cover	Aluminum alloy
18	Bumper	TPU(Φ12~Φ25)\NBR(Others)
19	Wear ring	No(Φ12~Φ32)\Wear resistant material(Others)
20	Piston	Brass(Φ12, Φ16)\Aluminum alloy(Others)
21	Screw	Carbon steel
22	Fixing screw	Carbon steel
23	Bumper	PTFE(Φ12~Φ40)\POM(Others)

Ordering code

QCK L 32 × 20 S FB G

- **Model**: QCK: Rotary clamp cylinder
- **Rotation direction**: L: Push and turn left; R: Push and turn right
- **Bore size**: 12 16 20 25 32 40 50 63
- **Clamping stroke**

Bore size	Clamping stroke
Φ12	10, 20
Φ16~Φ25	10, 20, 30
Φ32~Φ63	10, 20, 30, 50

- **Magnet**: S: With magnet
- **Mounting type**: Blank: No bracket; FB: FB type ①
- **Thread type** ②: G: G; T: NPT

① Back flange is same as ACQ series (please refer below table), if need front flange, please contact us.

Bore size\Accessories	FB	Material	Bore size\Accessories	FB	Material
12	F-ACQ12FA	Aluminum alloy	32	F-ACQ32FA	Aluminum alloy
16	F-ACQ16FA		40	F-ACQ40FA	
20	F-ACQ20FA		50	F-ACQ50FA	
25	F-ACQ25FA		63	F-ACQ63FA	

② When the thread is standard, the code is blank.

The definition of rotation direction and angle

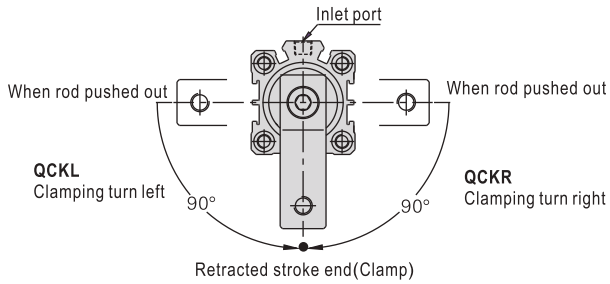

Levorotatory(QCKL):
When the piston of cylinder moves downward, the swivel arms moves anticlockwise, this is called levorotatory.

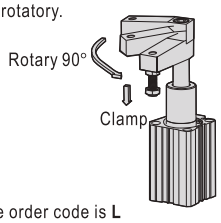

The order code is **L**

Dextrorotary(QCKR):
When the piston of cylinder moves downward, the swivel arms moves clockwise. this is called dextrorotary.

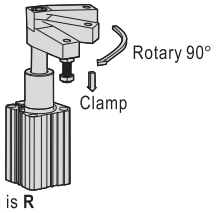

The order code is **R**

Dimensions

QCK

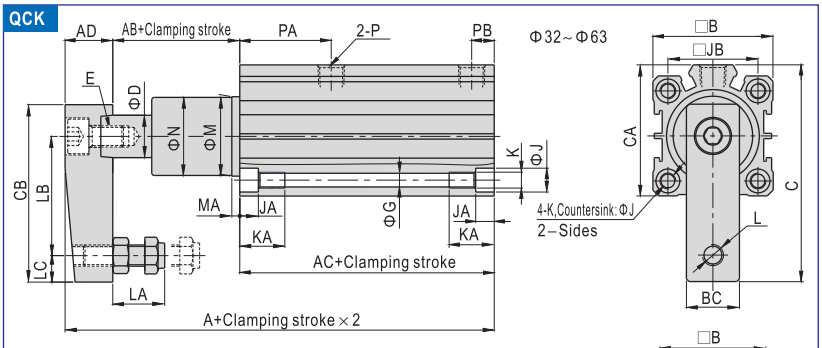

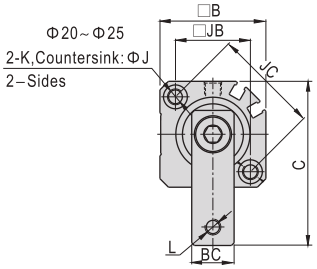

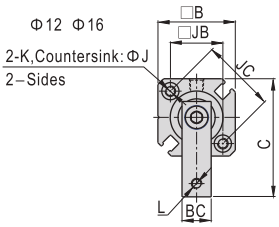

Note) All the **s** above are clamping stroke.

Bore size\Item	A	AB	AC	AD	B	BC	C	CA	CB	D	E	G	J	JA	JB
12	55	10.5	35.5	9	25	9	36.5	–	29	6	M3 × 0.5	3.3	6.5	3.5	15.5
16	59	10.5	35.5	13	29	11	44.5	–	36	8	M5 × 0.8	3.3	6.5	3.5	20
20	86	8	62	16	36	16	60	–	51	12	M8 × 1.25	5	9	7	25.5
25	87	8	63	16	40	16	62	–	51	12	M8 × 1.25	5	9	7	28
32	108	17.5	71.5	19	45	19	82	49.5	67	16	M10 × 1.5	5	9	7	34
40	109	25	65	19	53	19	85.5	57	67	16	M10 × 1.5	5	9	7	40
50	133	31	76.5	25.5	64	25.5	114	71	88	20	M12 × 1.75	6.5	11	8	50
63	136	30.5	80	25.5	77	25.5	120.5	84	88	20	M12 × 1.75	8.5	14	10.5	60

Bore size\Item	JC	K	KA	L	LA	LB	LC	M	MA	N	P	PA	PB
12	22	M4 × 0.7	11	M4 × 0.7	7~13	20	4	11	3	10.8	M5 × 0.8	13.5	5.5
16	28	M4 × 0.7	11	M4 × 0.7	7~13	25	5	14	3	13.8	M5 × 0.8	15	5.5
20	36	M6 × 1.0	17	M6 × 1.0	9.5~20.5	35	7	18	3	17.8	M5 × 0.8	30	6
25	40	M6 × 1.0	17	M6 × 1.0	9.5~20.5	35	7	23	6	22.5	M5 × 0.8	30	7
32	–	M6 × 1.0	17	M8 × 1.25	13.5~25.5	45	10	30	7	29.5	1/8"	34.5	8.5
40	–	M6 × 1.0	17	M8 × 1.25	13.5~25.5	45	10	30	3	29.5	1/8"	26.5	9
50	–	M8 × 1.25	22	M10 × 1.5	14.5~30	65	10	37	3.5	36.5	1/4"	34	11.5
63	–	M10 × 1.5	28.5	M10 × 1.5	14.5~30	65	10	48	3.5	47.5	1/4"	34.5	11.5

QCK-FB

Φ32~Φ63

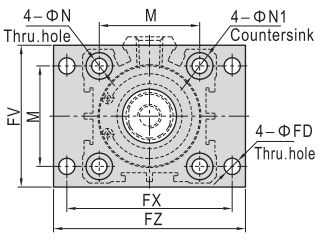

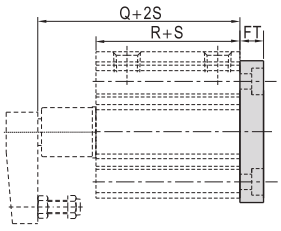

Φ12~Φ25

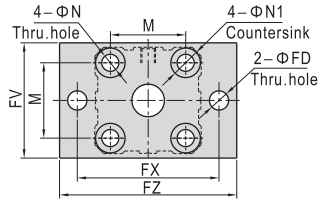

Bore size\Item	R	Q	M	N	N1	FD	FT	FV	FX	FZ
12	35.5	46	15.5	4.5	7.5	4.5	5.5	25	45	55
16	35.5	46	20	4.5	7.5	4.5	5.5	30	45	55
20	62	70	25.5	6.5	10.5	6.5	8	39	48	60
25	63	71	28	6.5	10.5	6.5	8	42	52	64
32	71.5	89	34	6.5	10.5	5.5	8	48	56	65
40	65	90	40	6.5	10.5	5.5	8	54	62	72
50	76.5	107.5	50	8.5	13.5	6.5	9	67	76	89
63	80	110.5	60	10.5	16.5	9	9	80	92	108

Installation and operation

1. To insure the life-span of cylinder and jig, please use flow control valve to control the speed of cylinder.
2. The method of installation are mounted by flange on top or bottom.

Mounting on bottom

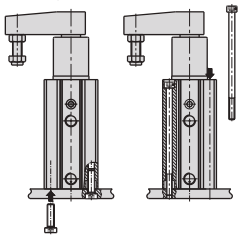

Mounting on top

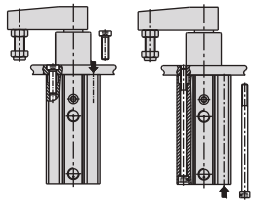

3. Befor the cylinder is connected to pipeline sundries in the pipe must be eliminated, or may cause leakage.
4. Please clean the piston–rod and dust scraping ring to protect the cylinder.
5. The cylinder using normal magnet ring can use the same sensor as ACQ series. For the cylinder using strong magnet ring we suggest using AirTAC's CS1-69AM sensor.
6. Because the rotary force is strong when the cylinder's acting, we suggest using flow control valve to control the speed to protect cylinder.
7. Please install the cylinder following the right diagram.
8. The installation method as the diagram below is wrong, and will injure the cylinder and shorten the cylinder life.

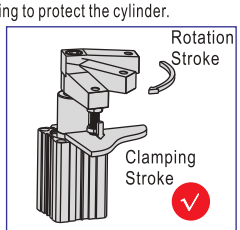

Only can clamping in clamping stroke.

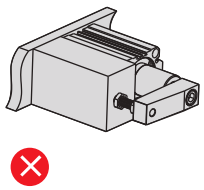

Don't installed horizontally

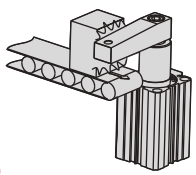

Don't exert horizontally load or force

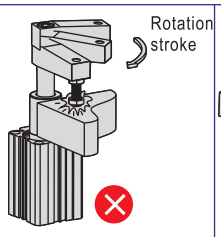

Please don't clamp when rotating.

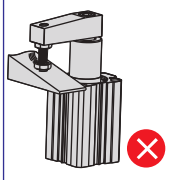

Please don't clamp on bevel

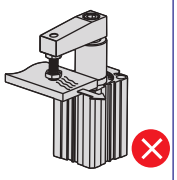

Do not more the workpiece when clamped

9. Rocker

9.1) The design of rocker can keep it stable and can change direction by customer.

9.2) Please follow the diagram below on right side to assemble/disassemble the rocker by spanner and allen wrench; don't hold the body to assemble/disassemble rocker, or will damage the cylinder.

9.3) If need customize rocker, please contact us.

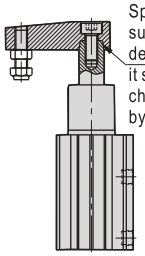

Special conical surface locked design can keep it stable and can change direction by customer.

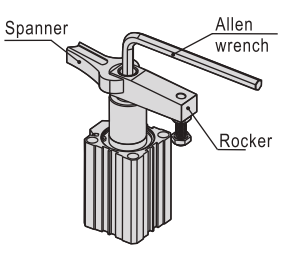

QCK

How to select product

1. When arms are to be made separately, their length and weight should be within the following range.

2. Allowable bending moment:
Use the arm length and operating pressure within graph(1) for allowable bending moment loaded piston rod.

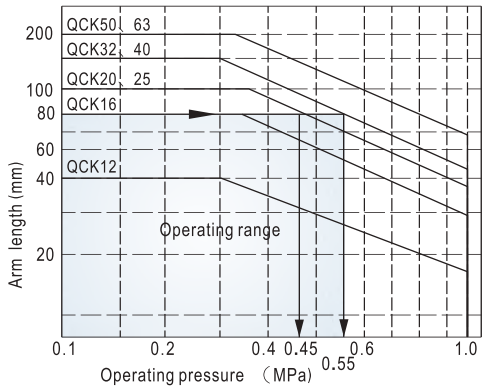

Example: When arm length is 80mm, pressure should be less than
QCK20/25:0.45MPa
QCK32/40:0.55MPa

3. Moment of inertia:
When the arm is long and heavy, damage of internal parts may be caused due to inertia. Use the inertia moment and cylinder speed within graph(2) based on arm requirments.

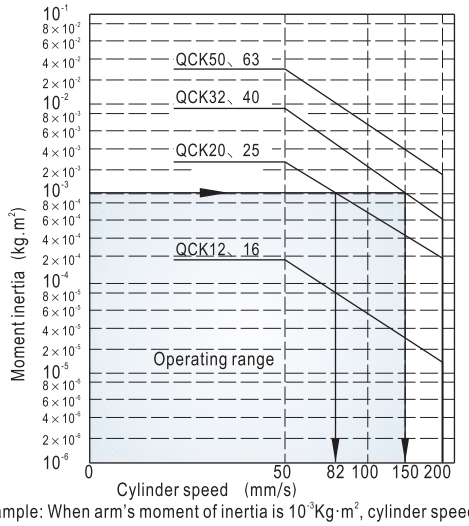

Example: When arm's moment of inertia is 10^{-3}Kg·m², cylinder speed should be less than
QCK20/25:82mm/s
QCK32/40:150mm/s
Note) The average speed of piston=the highest speed of piston/1.6

4. Moment of inertia of cylinder's arm when rotating based on its rotary axis, shown in graph(3).

Model	Moment of inertia(Kg·m²)
QCK12	3.555×10^{-6}
QCK16	1.053×10^{-5}
QCK20\25	5.257×10^{-5}
QCK32\40	1.653×10^{-4}
QCK50\63	7.387×10^{-4}

5. Calculation reference:
5.1 Moment of inertia of arm (I1) : Refer to the graph(3) after the cylinder bore diameter is determined.
5.2 Moment of inertia of jig (I2) : According to shape of the jig and the next item 6 "Calculation for moment of inertia", pick out a proper formula for calculation. The jig shown on the right graph is a cylinder ,its formula of moment of inertia is:
$I_2=(m_2*D*D)/8+m_2*L*L$
When QCK32 is selected: L=0.045m(arm length);
If D=0.04m m_2=0.4kg

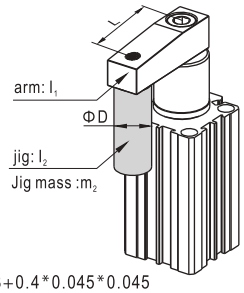

From graph(3): $I_1=1.653\times10^{-4}$(Kg·m²)
By Calculation : $I_2=(m_2*D*D)/8+m_2*L*L=$（0.4*0.04*0.04)/8+0.4*0.045*0.045
$=8.9\times10^{-4}$(Kg·m²)
Total value: $I=I_1+I_2=10.553\times10^{-4}=1.0553\times10^{-3}$(Kg·m²)
According to graph(2),the highest speed of the cylinder should be less than 150 mm/s; According to graph(1),it can be used under a pressure of 0.9Mpa. The average speed of piston=the highest speed of piston/1.6=94 mm/s.

6. Calculation for moment of inertia

Diagram	Calculation formula of moment of inertia
1. Thin bar Position of rotary axis:Vertical to the bar and through the end	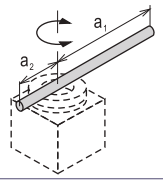 $I=\frac{m_1a_1^2+m_2a_2^2}{3}$
2. Thin bar Position of rotary axis:Vertical to the bar and through the center of gravity	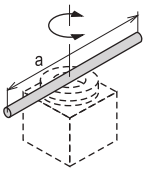 $I=\frac{ma^2}{12}$
3. Load at the end of lever arm	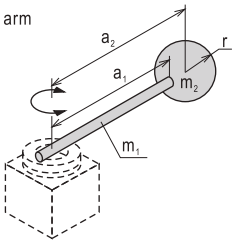 $I=m_1\times\frac{a_1^2}{3}+m_2\times a_2^2+k$ $k=m_2\times\frac{2r^2}{5}$
4. Thin rectangular plate (Rectangular parallelepiped) Position of rotary axis:Parallel to side b and through the center of gravity	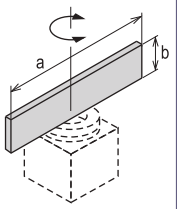 $I=\frac{ma^2}{12}$
5. Thin rectangular plate (Rectangular parallelepiped) Position of rotary axis:Vertica to the plate and through the end	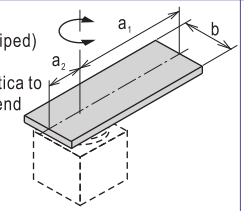 $I=m_1\times\frac{4a_1^2+b^2}{12}+m_2\times\frac{4a_2^2+b^2}{12}$
6. Thin rectangular plate (Rectangular parallelepiped) Position of rotary axis:Through the center of gravity and vertical to the plate(Same as also thickrectanglaur plate)	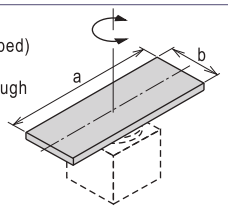 $I=\frac{ma^2+mb^2}{12}$

Product series

Series name	Acting type	Bore size
JCK Series	Double acting	40 50 63 80
Page	350	

Applications

Product feature

1 Rod-crank-slider structure made of high-strength, highly-wear-resisting material is adopted.

a) Stable and reliable structure which can produce large clamping force at low working pressure.

b) Self -lock mechanism is adopted at clamping position which can still provide clamping force even after compressed air is off.

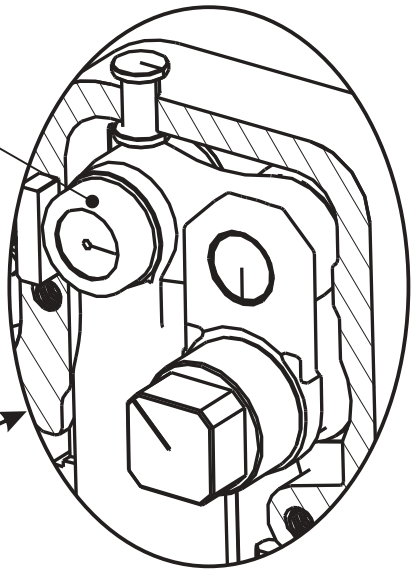

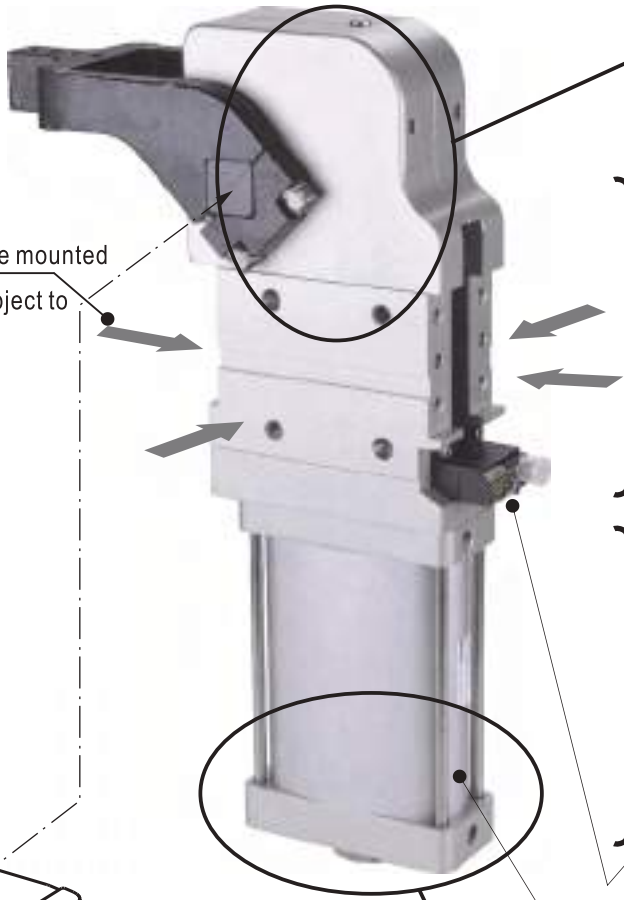

2 4 sides are to be mounted with dimensions subject to DIN standard.

Mechanism

3 Mechanism and cylinder designed as a whole.

Cylinder

4 Sensor fix adopts special design for convenient angle adjustment and reduction of welding spatter accumulation. Sensing system immune to interference providing steady and reliable signal.

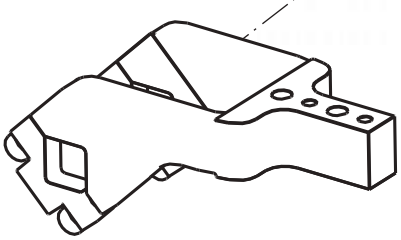

5 Oval-shaped cylinder which is space efficient.

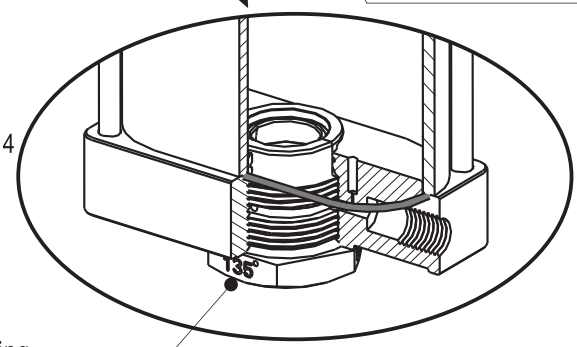

6 4 Arm styles AM1, AM2, AM3 and AM4 each with 3 specifications R, C and L for uses in different situations.

7 Opening angle adjustment by changing adjusting screw is easy and convenient.

Specification

Model	JCK40	JCK50	JCK63	JCK80
Output torque (0.5MPa)	120N.m	160N.m	380N.m	800N.m
Acting type	Double acting			
Fluid	Air(to be filtered by 40 μ m filter element)			
Operating pressure	0.3~0.8MPa(43~116psi)			
Proof pressure	1.2MPa(175psi)			
Temperature	-10~60 ℃			
Opening angle	15°/30°/45°/60°/75°/90°/105°/120°/135°			
Minimum opening and closure time	1 second clamping, 1 second opening			
Position sensing	Inductive approaching sensor			
Cushion type	Air buffer			
Weight (135°) ①	2.2kg	4.0kg	5.5kg	13.0kg
Port size ②	1/8"	1/4"		

① This weight includes 15mm offset clamping arm; ② G thread and NPT thread are available.

Ordering code

JCK □ 63 × 135 AM1 R K G

Model
JCK: Power clamp cylinder (Double acting)

Clamping arm position
Blank: horizontal
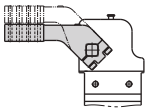
V: vertical
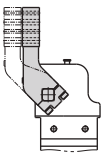

Bore size

40: Φ40
50: Φ50
63: Φ63
80: Φ80

Opening angle

Opening angle	Maximum opening angle	
15：15°	JCK40	AM1: 135°
30：30°		AM3: 105°
45：45°	JCKV40	AM1: 120°
60：60°		AM3: 105°
75：75°	JCK50\JCK63 JCK80	135°
90：90°		
105：105°	JCKV50 JCKV63 JCKV80	105°
120：120°		
135：135°		

Thread type

G: G
T: NPT

Sensor switch

Blank：No sensor switch
K：With sensor switch

Clamping arm

Bore size	Clamping arm code		Explanation ①
40 ~ 80	Blank		No clamping arm
40	AM1 (Offset 15mm) 15	R	Φ6 Φ7 R C L
	AM3 (Offset 45mm) 45	C	
		L	
50 63 80	AM1 (Offset 15mm) 15	R	Φ6 Φ9 R C L
	AM3 (Offset 45mm) 45	C	
		L	
	AM2 (Offset 15mm) 15	R	Φ8 Φ10.2 R C L
	AM4 (Offset 45mm) 45	C	
		L	

① Please refer to the drawing for detailed dimensions of clamping arm.
Others: Sensor switch can be ordered separately and please refer to relative contents.

Inner structure and material of major parts

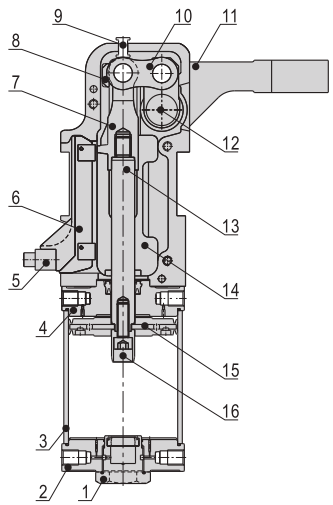

NO.	Item	Material
1	Adjusting screw	Free machining steel
2	Back cover	Aluminum alloy
3	Aluminum barrel	Aluminum alloy
4	Front cover	Aluminum alloy
5	Sensor switch	
6	Sensor switch fix	Plastic
7	Y knuckle	Alloy steel
8	Strengthen steel plate	Alloy steel
9	Retaining pin	Carbon steel
10	Connecting rod	Alloy steel
11	Clamping arm	Cast steel
12	Pivot	Alloy steel
13	Piston rod	Carbon steel
14	End cap	Aluminum alloy
15	Piston	NBR
16	Cushion body	Aluminum alloy

How to select product

1. Please design appropriate fixture according to "Allowable Arm Load-Load Offset curve" diagram.

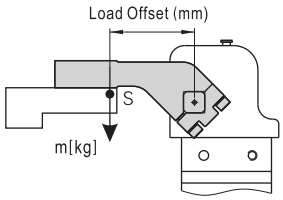

Bore size	Maximum load torque	
	1 second period	2 second period
40	2.2Nm	3.3Nm
50	4.5Nm	6.7Nm
63	6.0Nm	9.0Nm
80	8.0Nm	11.2Nm

S: distance from pivot point to center of mass of clamping arm
m: weight of clamping arm

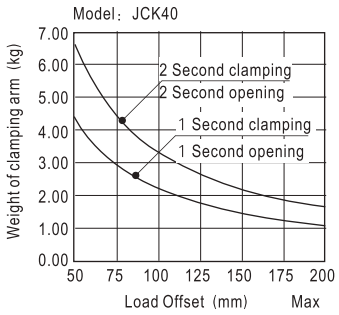

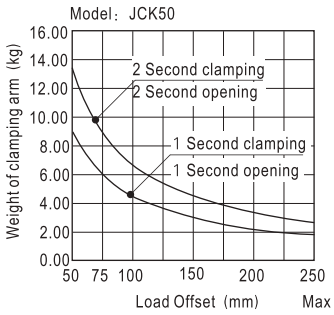

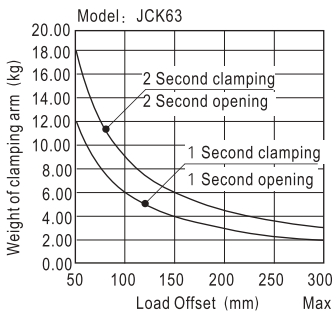

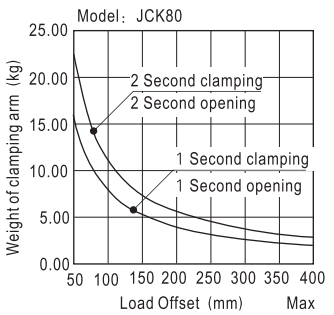

Attention: Please use with speed control valve.

2. Please choose appropriate clamping position according to "Torque-Clamping Arm Length curve" diagram.

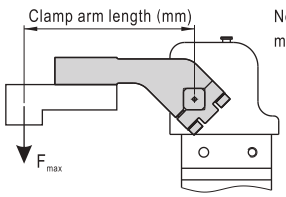

Note: For clamping force is produced by elbow mechanism, maximum torque is only reached at final clamping arm position.

Bore size	Maximum clamp torque					
	0.3MPa	0.4MPa	0.5MPa	0.6MPa	0.7MPa	0.8MPa
40	72Nm	95Nm	120Nm	143Nm	167Nm	191Nm
50	99Nm	132Nm	165Nm	198Nm	230Nm	264Nm
63	230Nm	307Nm	384Nm	460Nm	537Nm	614Nm
80	482Nm	643Nm	803Nm	964Nm	1124Nm	1285Nm

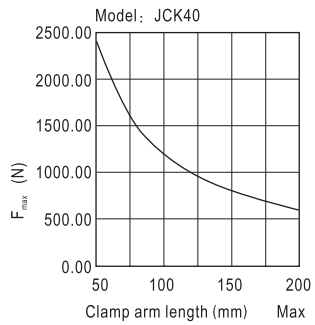

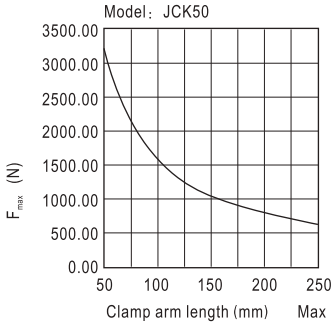

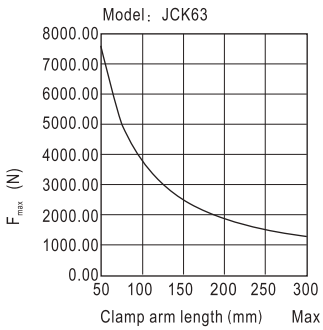

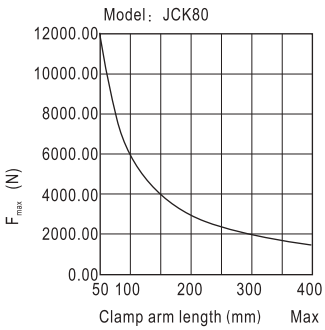

3. Please choose appropriate washer according to "Torque-Spacer thickness curve" diagram.

Note: Inserted washer exceeding maximum clamping torque position may lead to self-lock failure. Take safety issue into account when considering thickness of spacer inserted.

Besides, clamping arm length L represents distance from pivot point to clamping position. For distance from mounting base locating hole to pivot A, please refer to the following table.

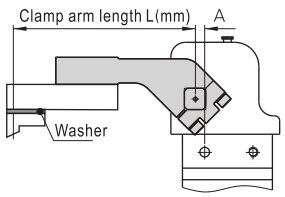

Bore size	A(mm)
40	12
50	10
63	10
80	15

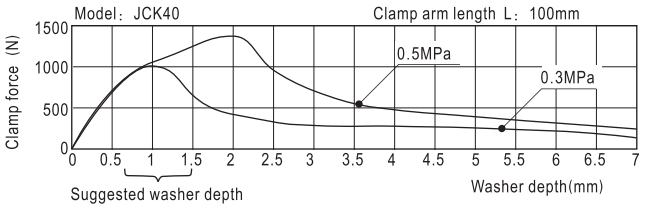

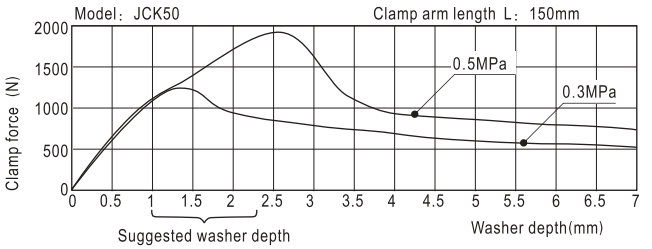

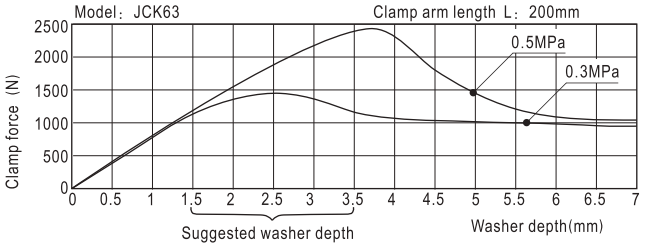

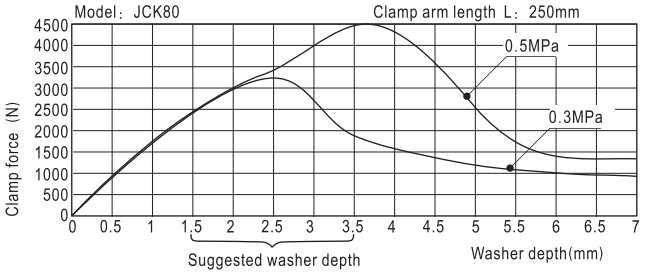

Dimensions

JCK40 AM1 AM2

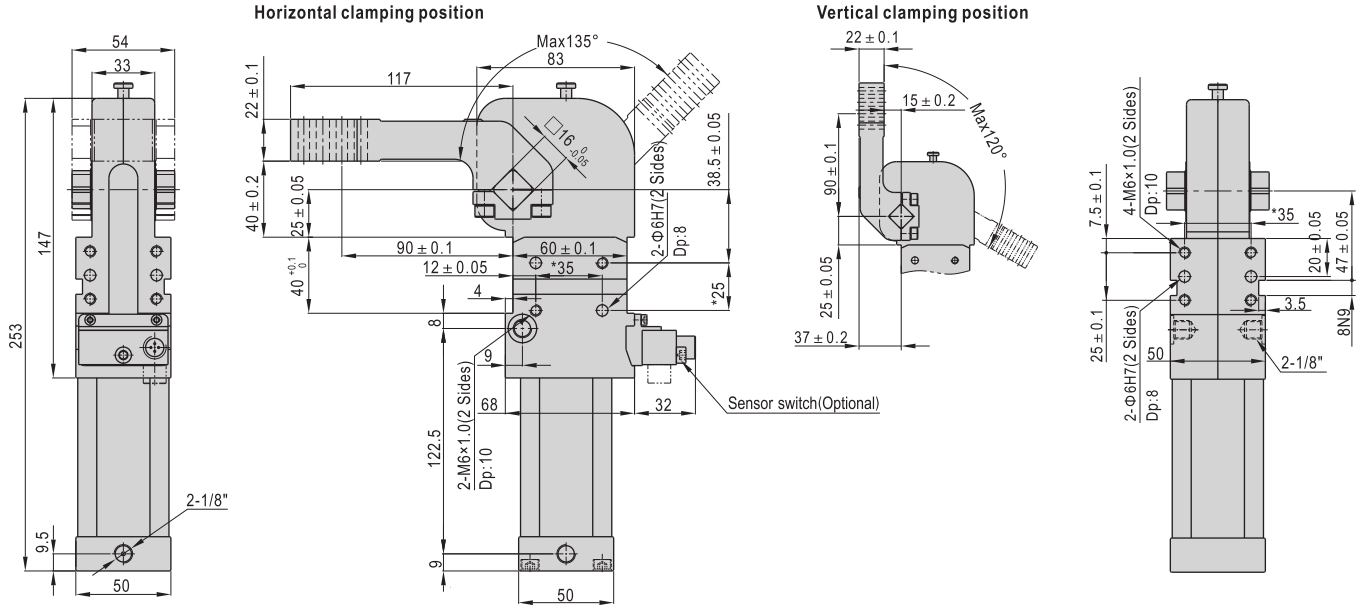

With * dimension: pin hole position tolerance: ±0.02. Thread hole position tolerance: ±0.1.

JCK40 AM3 AM4

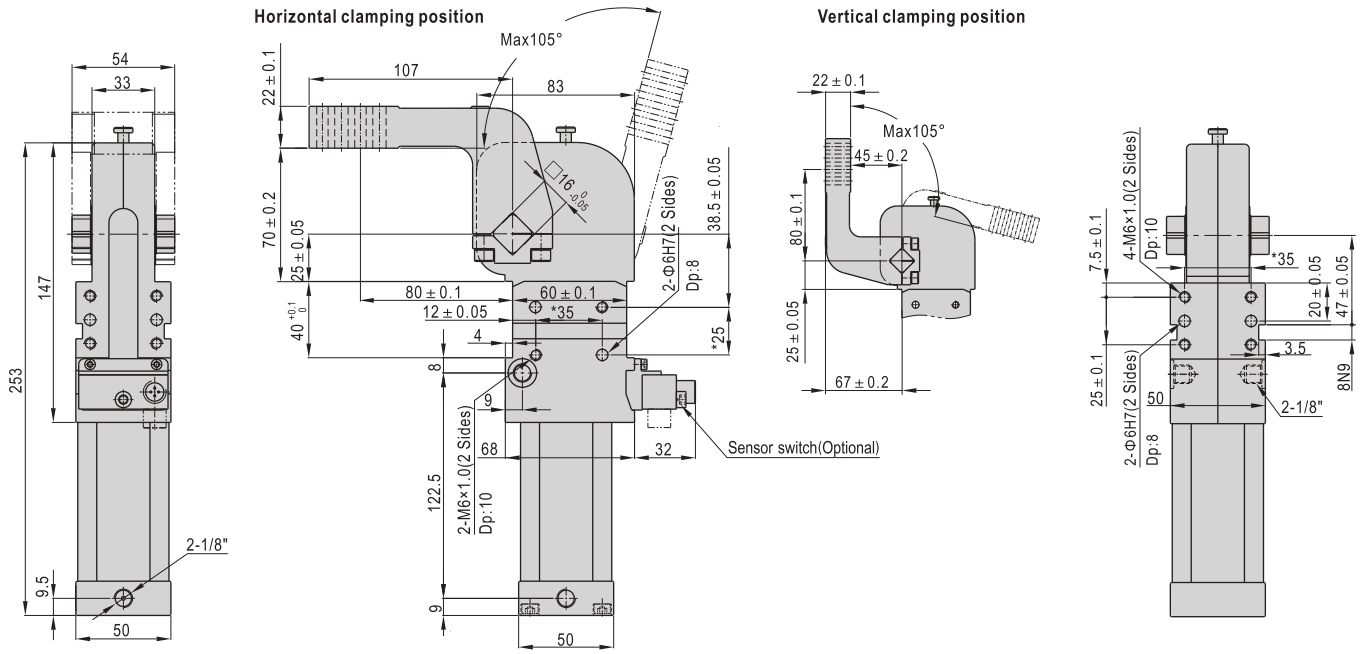

With * dimension: pin hole position tolerance: ±0.02. Thread hole position tolerance: ±0.1.

JCK50 AM1 AM2

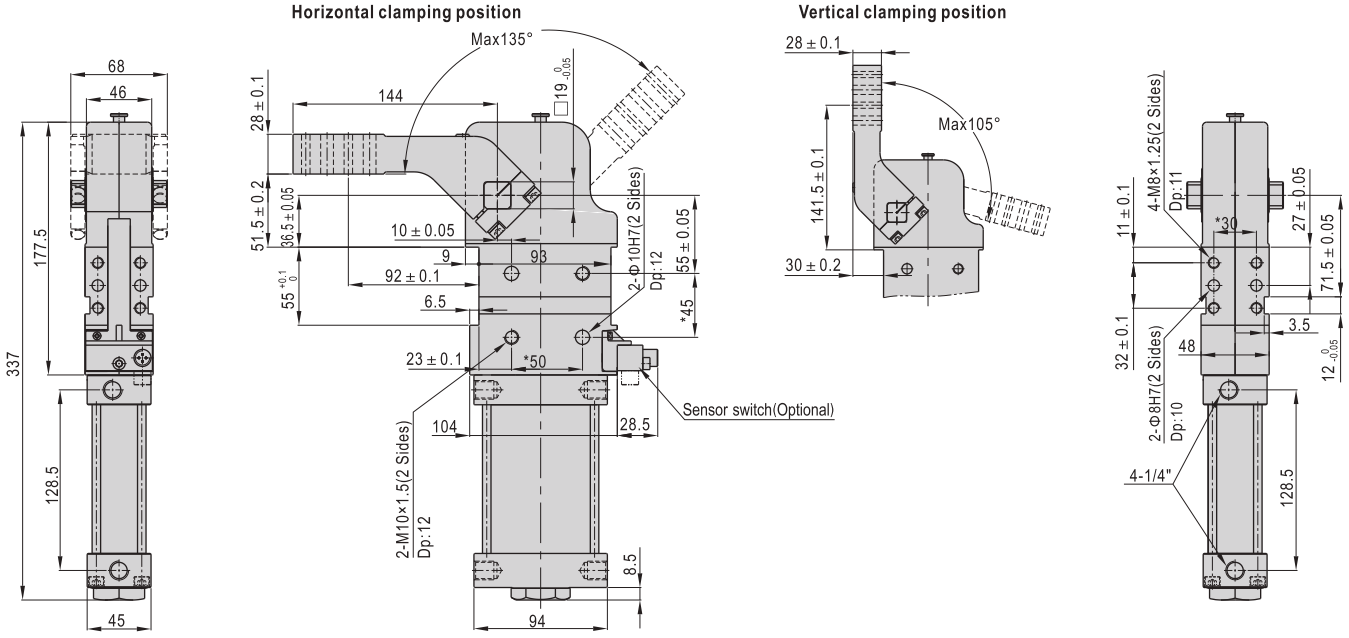

With * dimension: pin hole position tolerance: ±0.02. Thread hole position tolerance: ±0.1.

JCK50 AM3 AM4

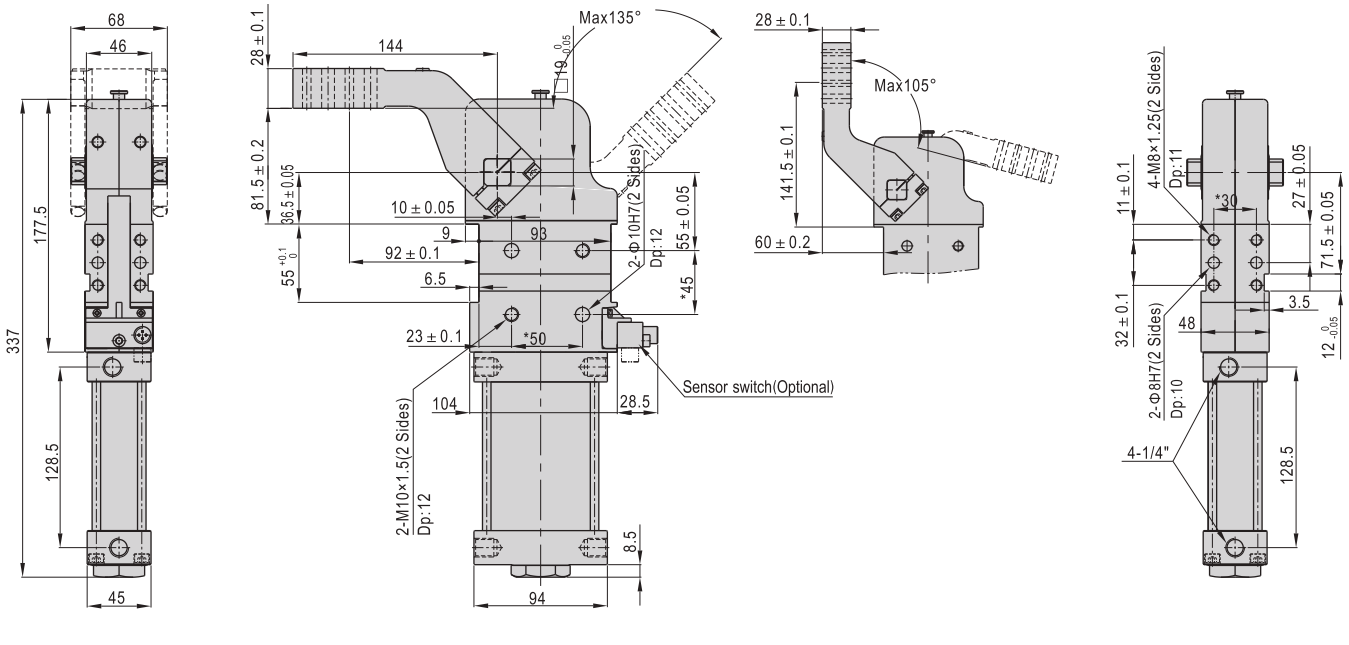

With * dimension: pin hole position tolerance: ±0.02. Thread hole position tolerance: ±0.1.

JCK63 AM1 AM2

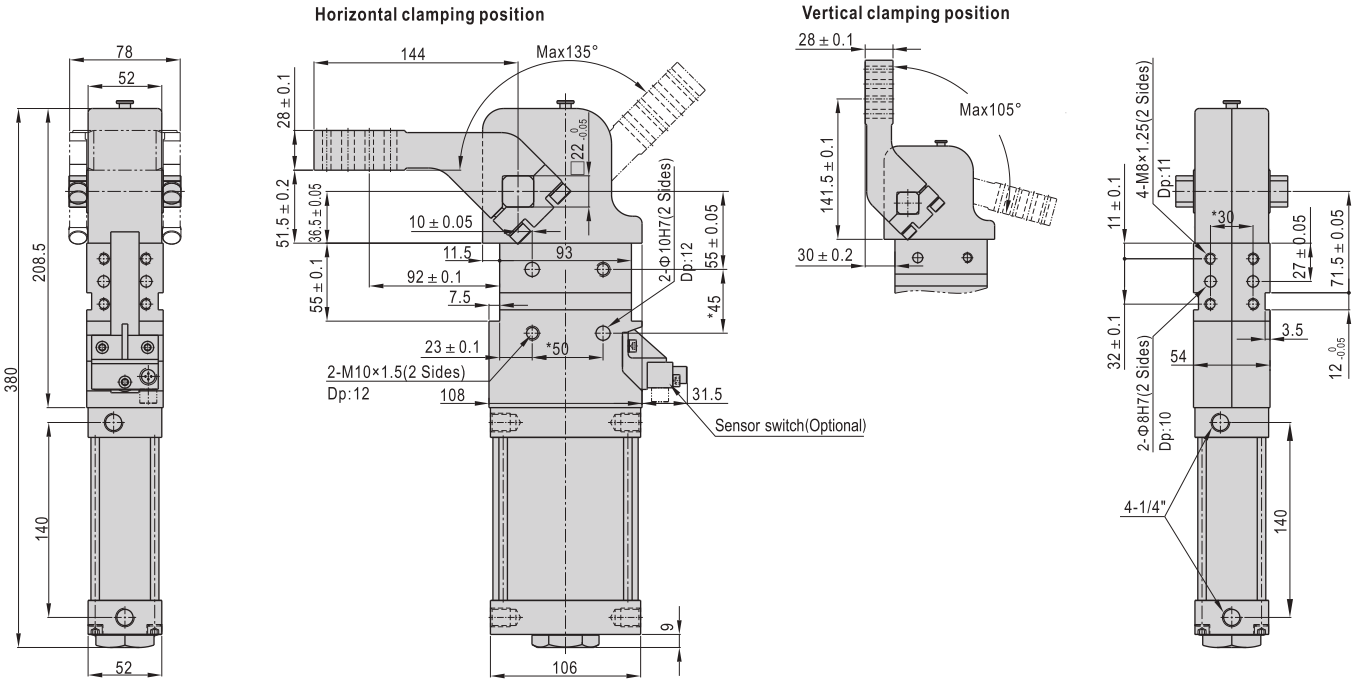

With * dimension: pin hole position tolerance: ±0.02. Thread hole position tolerance: ±0.1.

JCK63 AM3 AM4

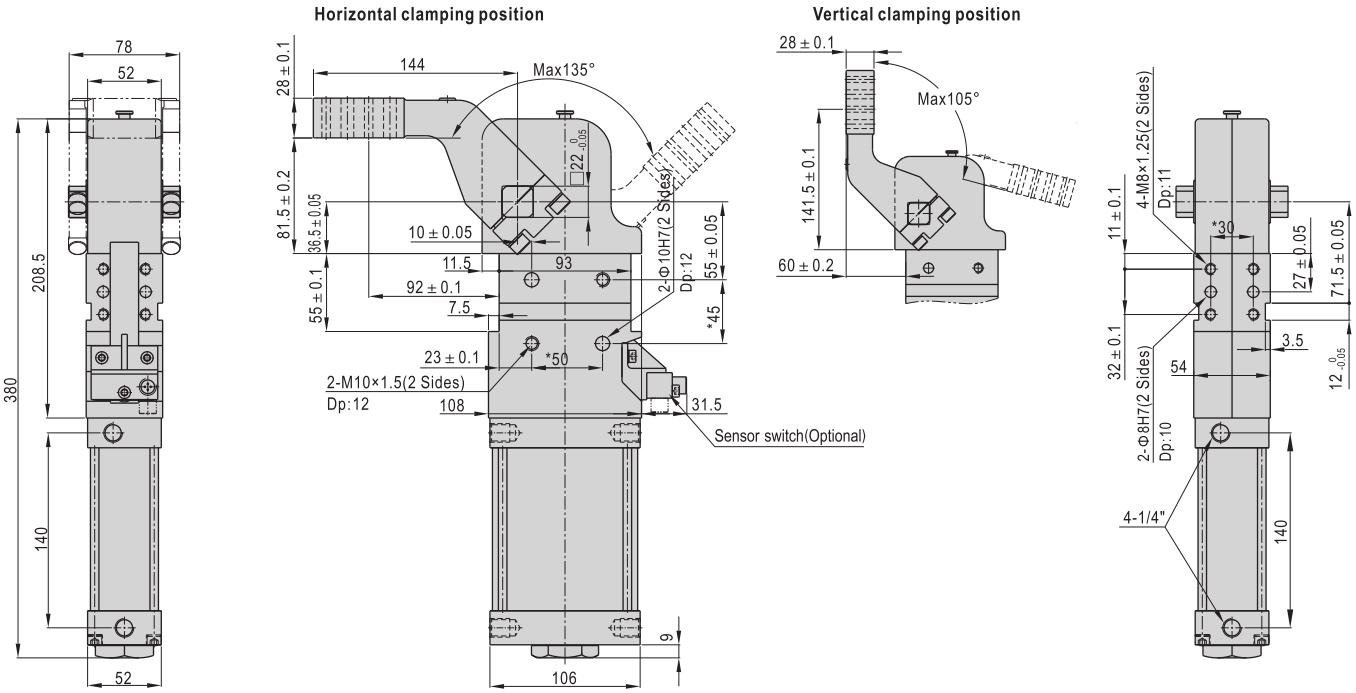

With * dimension: pin hole position tolerance: ±0.02. Thread hole position tolerance: ±0.1.

JCK80 AM1 AM2

Horizontal clamping position

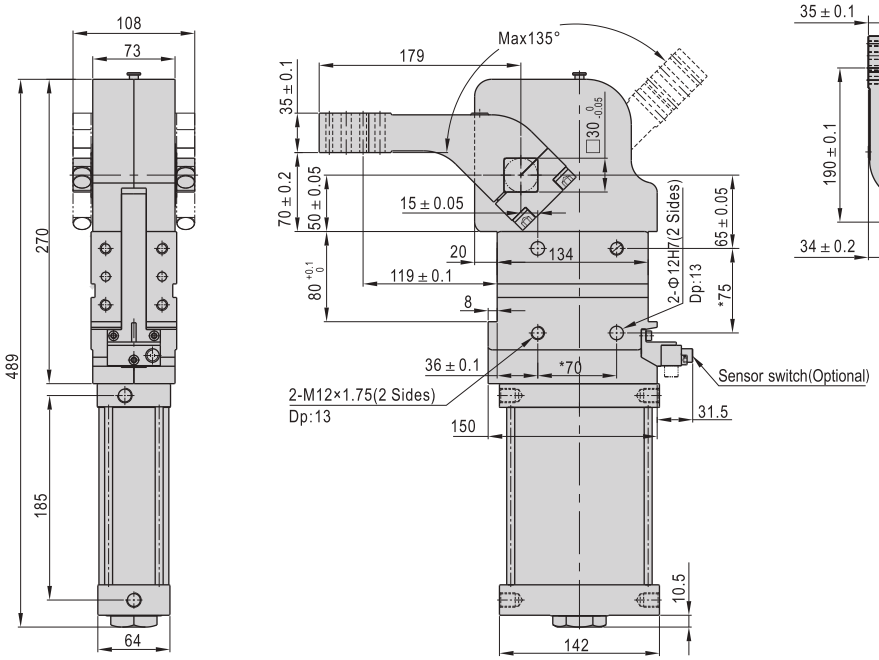

Vertical clamping position

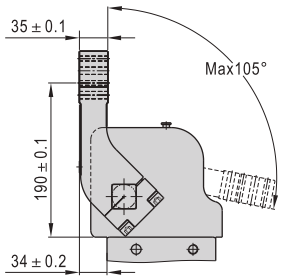

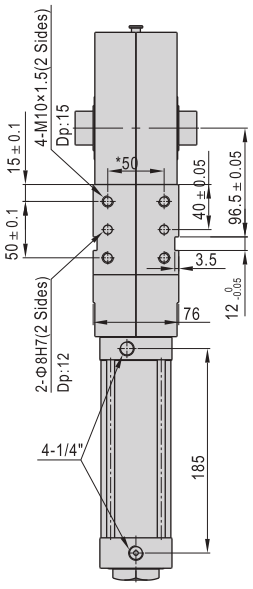

With * dimension: pin hole position tolerance: ±0.02. Thread hole position tolerance: ±0.1.

JCK80 AM3 AM4

Horizontal clamping position

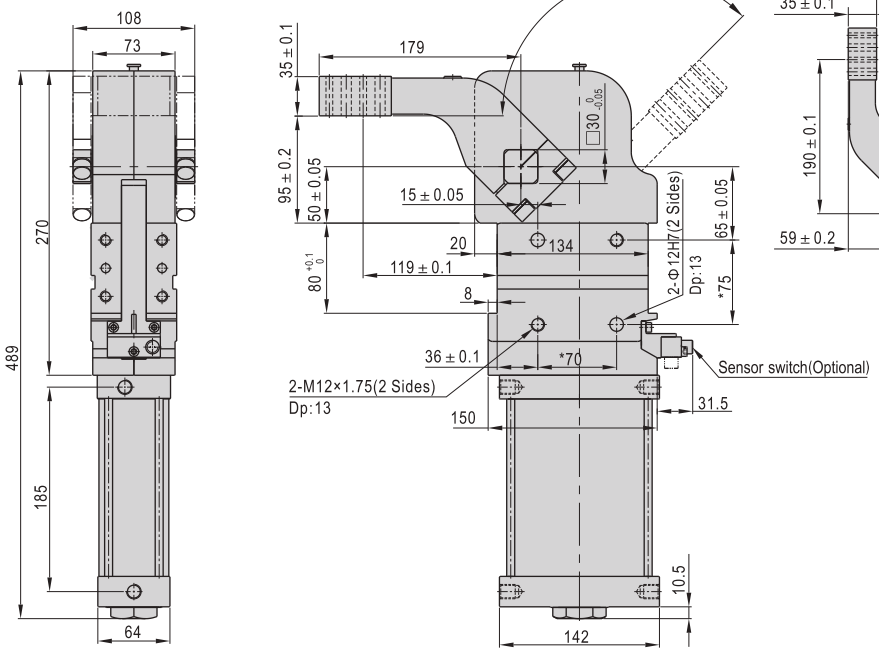

Vertical clamping position

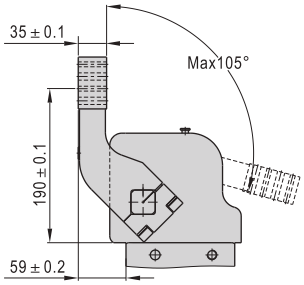

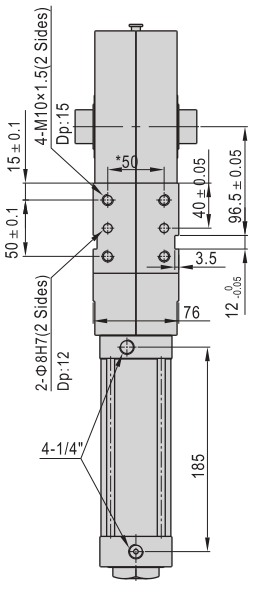

With * dimension: pin hole position tolerance: ±0.02. Thread hole position tolerance: ±0.1.

Specification

Model	JCK40	JCK50	JCK63	JCK80
Output torque (0.5MPa)	120N.m	160N.m	380N.m	800N.m
Acting type	Double acting			
Fluid	Air(to be filtered by 40 μ m filter element)			
Operating pressure	0.3~0.8MPa(43~116psi)			
Proof pressure	1.2MPa(175psi)			
Temperature	-10~60 ℃			
Opening angle	15°/30°/45°/60°/75°/90°/105°/120°			
Minimum opening and closure time	1 second clamping, 1 second opening			
Position sensing	Inductive approaching sensor			
Cushion type	Air buffer			
Weight (135°) ①	2.5kg	4.5kg	6.0kg	14.0kg
Port size ②	1/8"	1/4"		

① This weight includes 15mm offset clamping arm; ② G thread and NPT thread are available.

Ordering code

JCK □ 63 x 120 AM1R HL K G

Model
JCK: Power clamp cylinder (Double acting)

Clamping arm position
Blank: horizontal
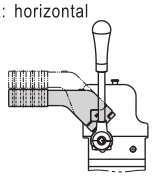
V: vertical
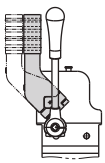

Bore size
40: Φ40
50: Φ50
63: Φ63
80: Φ80

Opening angle

Opening angle	Maximum opening angle	
15: 15°	JCK40 JCKV40	105°
30: 30°		
45: 45°		
60: 60°		
75: 75°	JCK50~80	120°
90: 90°		
105: 105°	JCKV50~80	105°
120: 120°		

Thread type
G: G
T: NPT

Sensor switch
Blank: No sensor switch
K: With sensor switch

Handle location
Blank: non-manual
HL: handle on the left
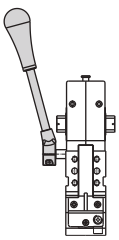
HR: handle on the right
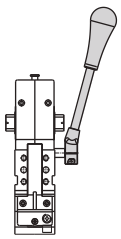

Clamping arm
Please refer to standard type for details

① Please refer to the drawing for detailed dimensions of clamping arm.
Others: Sensor switch can be ordered separately and please refer to relative contents.

Examples for using

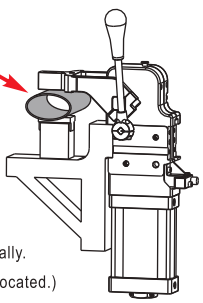

1. When the clamped plate is hollow and thin, the final clamping position should be reached manually at low speed before clamping with force to avoid scallops left by fast clamping.
2. When clamping forearm has a locating pin, it should be pushed out of the locating hole manually. (Clamping should be done before the pin is well located.)
3. When clamping mechanism is complicated with many small sheet-metal parts, clamping should be done manually at first to avoid compressed air flushing well-assembled sheet-metal parts.

Note: Part of manually clamping applications are listed above. Other welding process may be in need of manually clamping.

Contrast of self-lock and unlock

Standard type

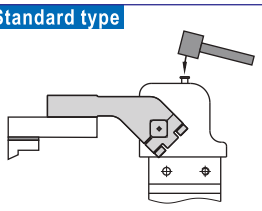

Self-lock:
1. By inletting compressed air.

Unlock:
1. By inletting compressed air.
2. By knocking retaining pin.

Manual type

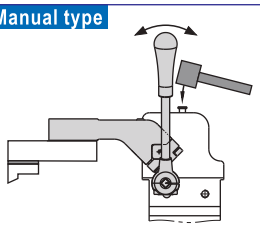

Self-lock:
1. By inletting compressed air.
2. By handle.

Unlock:
1. By inletting compressed air.
2. By knocking retaining pin.
3. By handle.

JCK

Dimensions

JCK40 AM1/AM2 HR(HL)

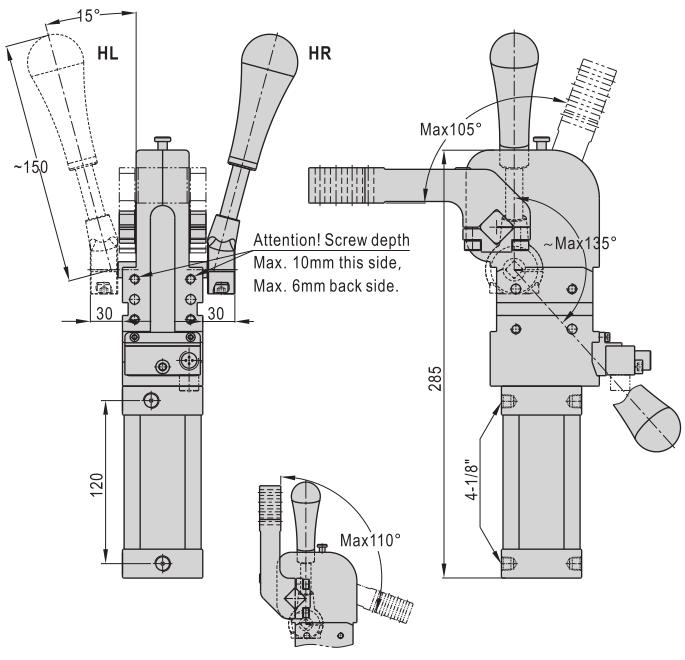

Vertical clamping position

Note：Please refer to standard type for the others dimensions.

JCK40 AM3/AM4 HR(HL)

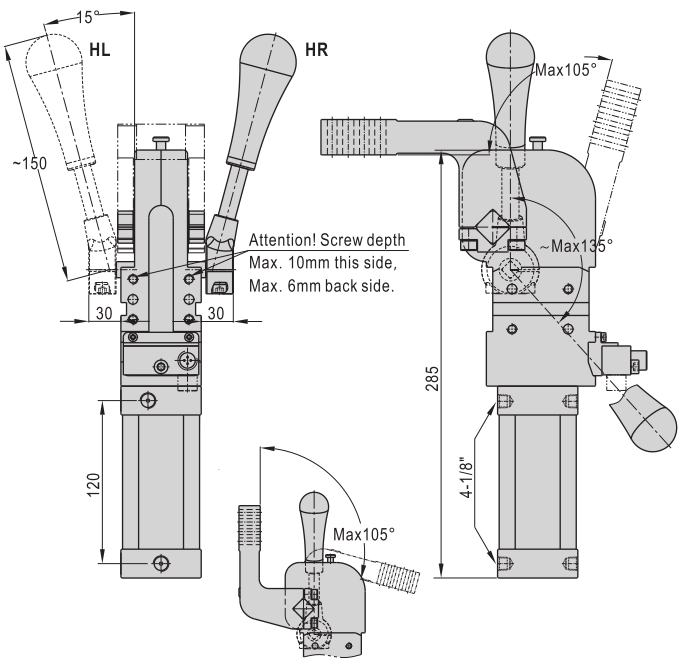

Vertical clamping position

JCK50 AM1/AM2 HR(HL)

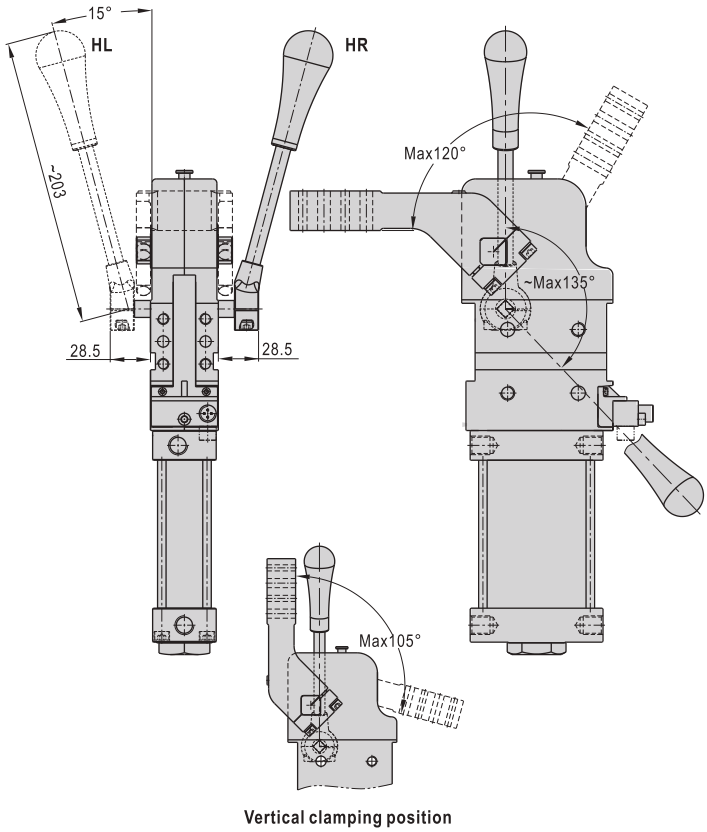

Vertical clamping position

Note：Please refer to standard type for the others dimensions.

JCK50 AM3/AM4 HR(HL)

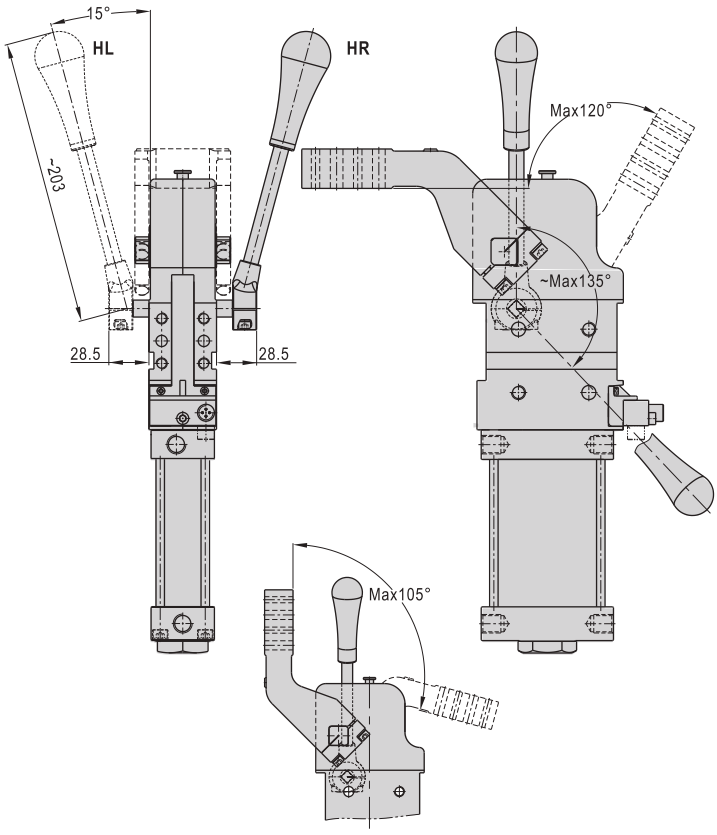

Vertical clamping position

JCK63 AM1 AM2 HR(HL)

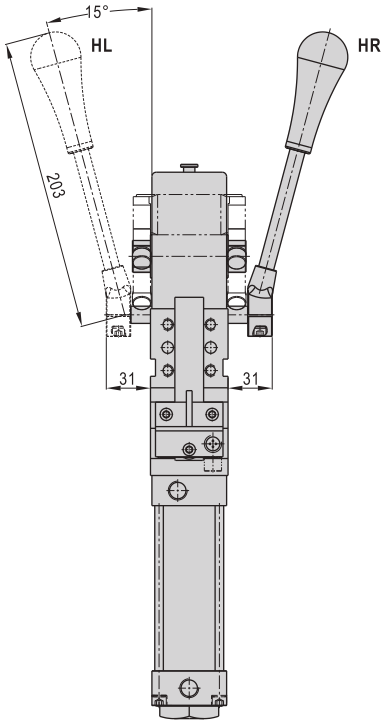

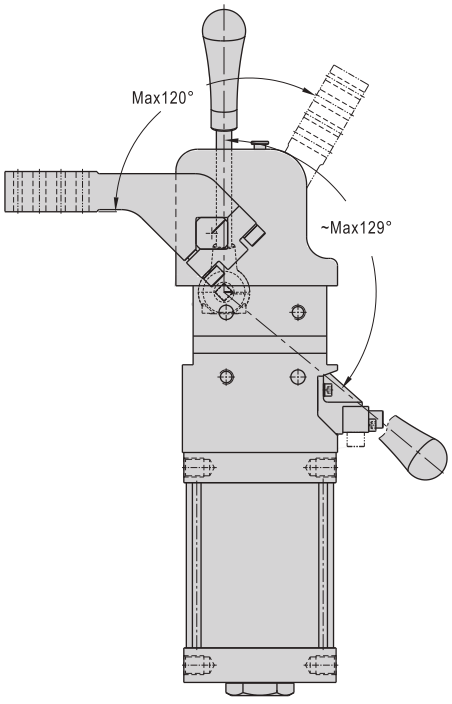

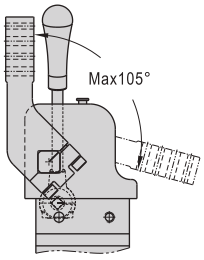

Vertical clamping position

JCK63 AM3 AM4 HR(HL)

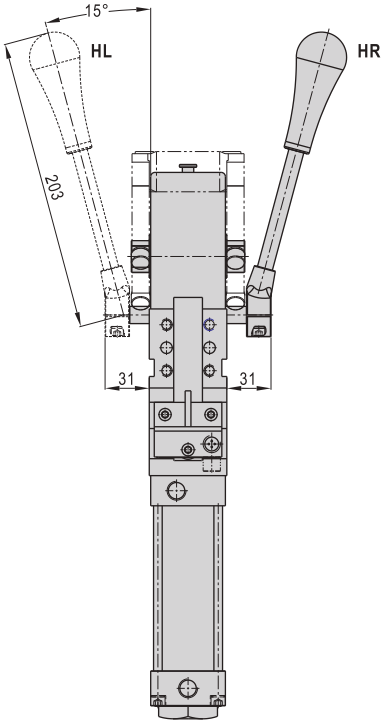

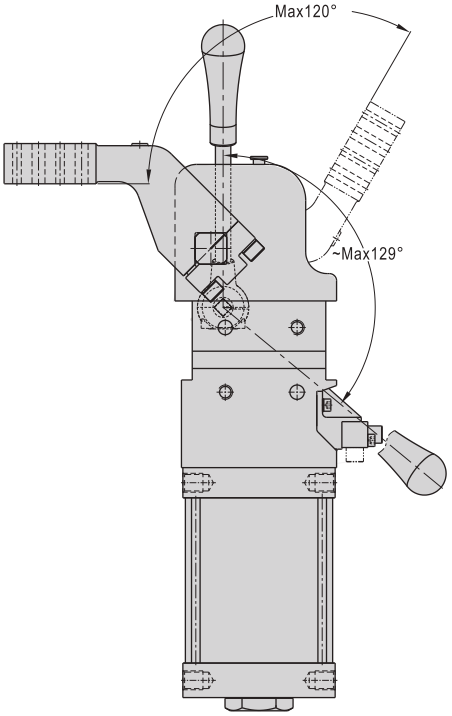

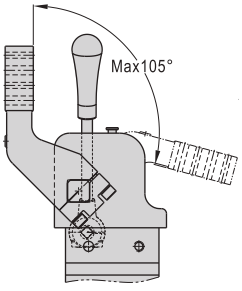

Vertical clamping position

Note: Please refer to standard type for the others dimensions.

JCK80 AM1 / AM2 HR(HL)

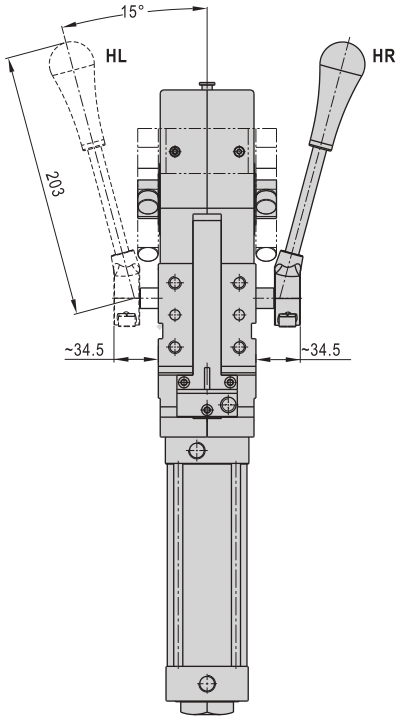

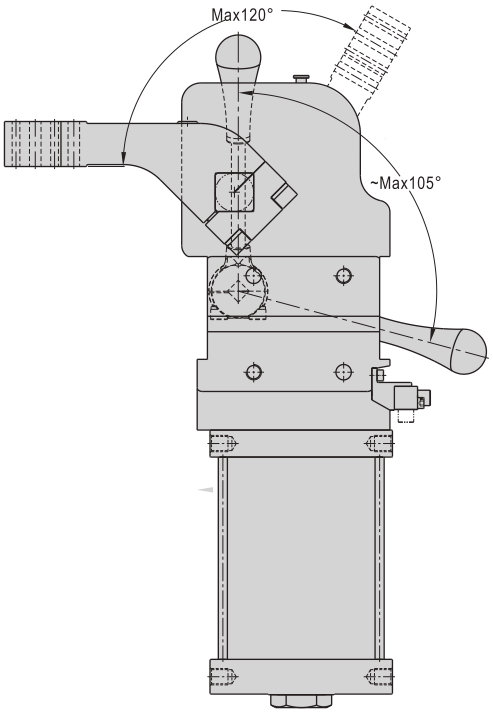

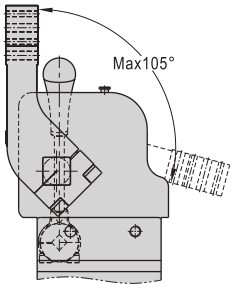

Vertical clamping position

JCK80 AM3 / AM4 HR(HL)

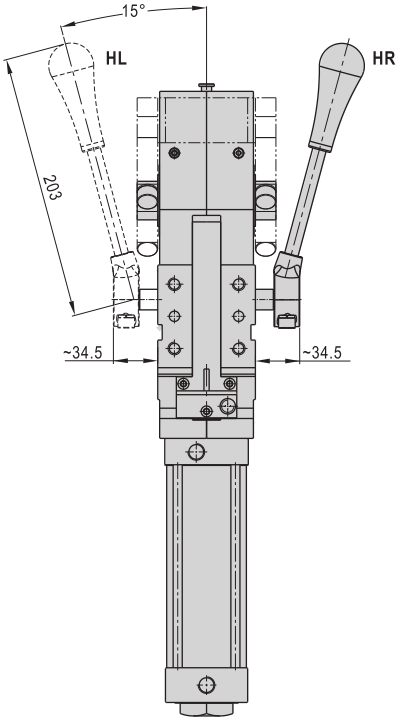

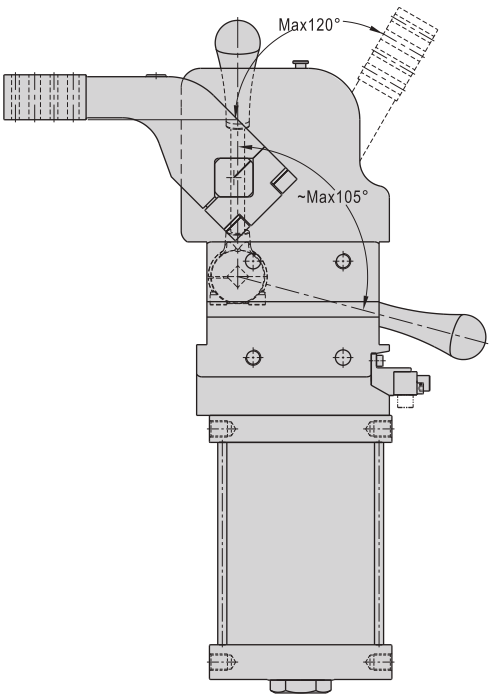

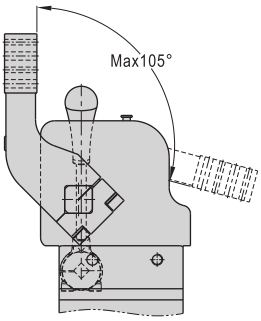

Vertical clamping position

Note: Please refer to standard type for the others dimensions.

How to select clamp arm and adjusting screw

Accessories\Cylinder type			JCK40	JCK50	JCK63	JCK80
Adjusting screw	F–JCK□□X15LM	F–JCK□□X30LM	●	●	●	●
	F–JCK□□X45LM	F–JCK□□X60LM	●	●	●	●
	F–JCK□□X75LM	F–JCK□□X90LM	●	●	●	●
	F–JCK□□X105LM	F–JCK□□X120LM	●	●	●	●
	F–JCK□□X135LM		●	●	●	●
Clamp arm	F–JCK□□AM1R	F–JCK□□AM3R	●	●	●	●
	F–JCK□□AM1C	F–JCK□□AM3C	●	●	●	●
	F–JCK□□AM1L	F–JCK□□AM3L	●	●	●	●
	F–JCK□□AM2R	F–JCK□□AM4R		●	●	●
	F–JCK□□AM2C	F–JCK□□AM4C		●	●	●
	F–JCK□□AM2L	F–JCK□□AM4L		●	●	●

Adjusting screw ordering code

F–JCK 63 × 135 LM

- Accessory code
- Cylinder type
- Bore size
- Adjusting angle

15：15°
30：30°
45：45°
60：60°
75：75°
90：90°
105：105°
120：120°
135：135°

- Adjusting screw code
  LM: Adjusting screw

Clamp arm ordering code

F–JCK 63 AM1C

- Accessory code
- Cylinder type
- Bore size
- Clamping arm

Bore size	Clamping arm code		Explanation
40 ~ 80	Blank		No clamping arm
40	AM1 (Offset 15mm) 15	R	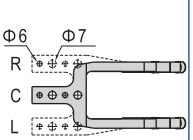
	AM3 (Offset 45mm) 45	C L	
50 63 80	AM1 (Offset 15mm) 15	R	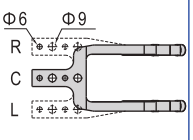
	AM3 (Offset 45mm) 45	C L	
	AM2 (Offset 15mm) 15	R	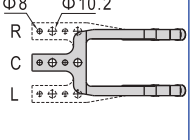
	AM4 (Offset 45mm) 45	C L	

Dimensions of clamp arm

F-JCK40AM1□

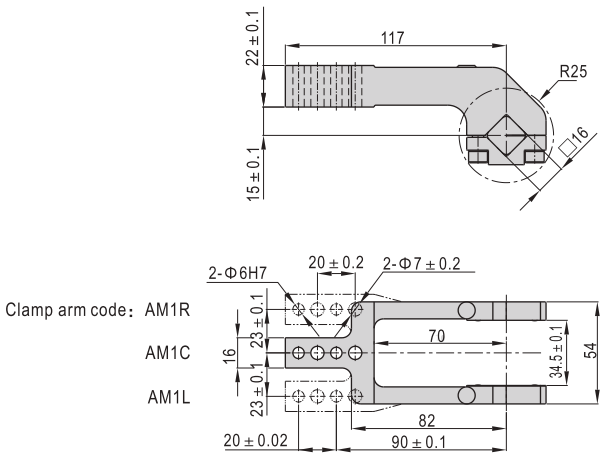

F-JCK40AM3□

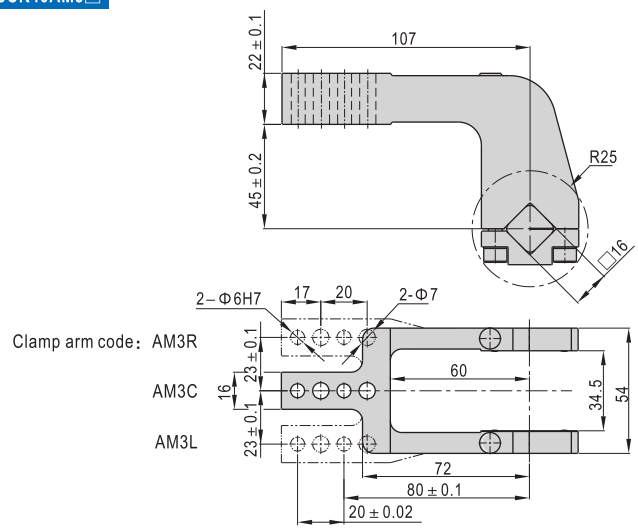

F-JCK50AM1□

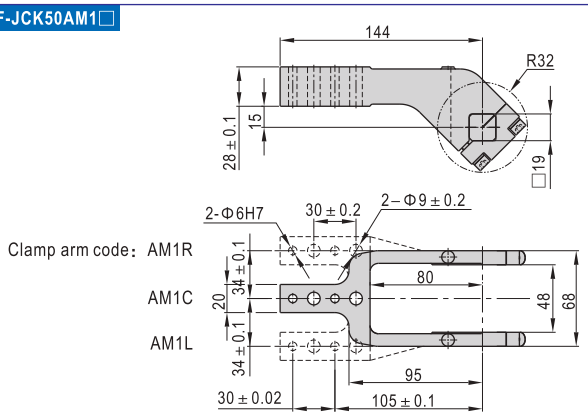

F-JCK63AM1□

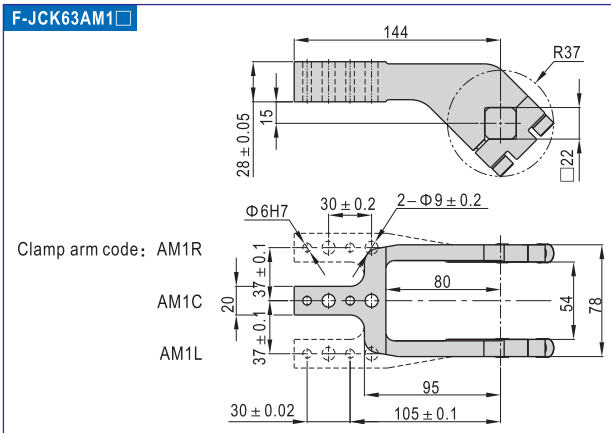

F-JCK50AM2□

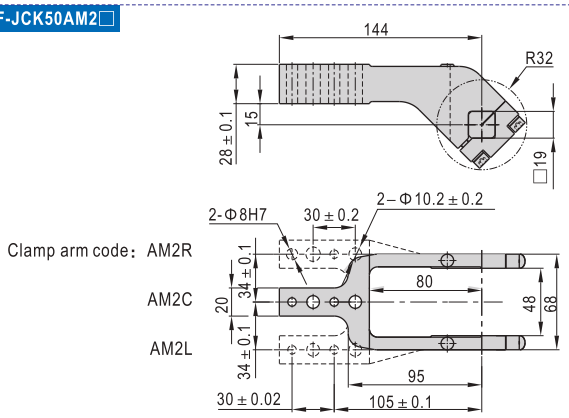

F-JCK63AM2□

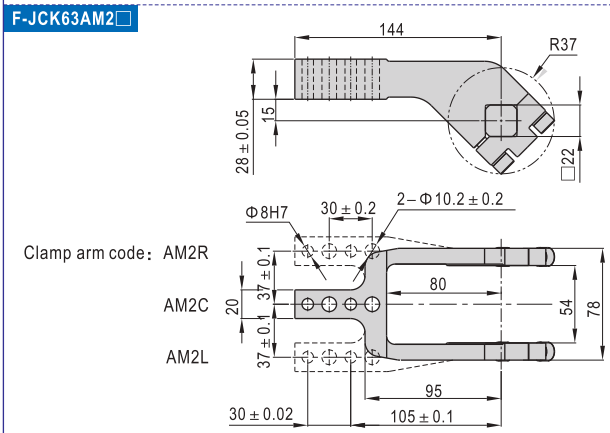

F-JCK50AM3□

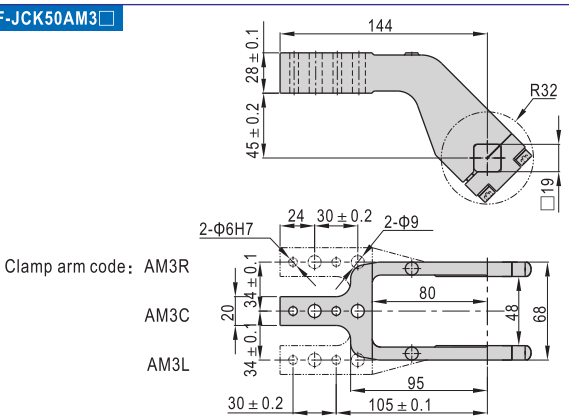

F-JCK63AM3□

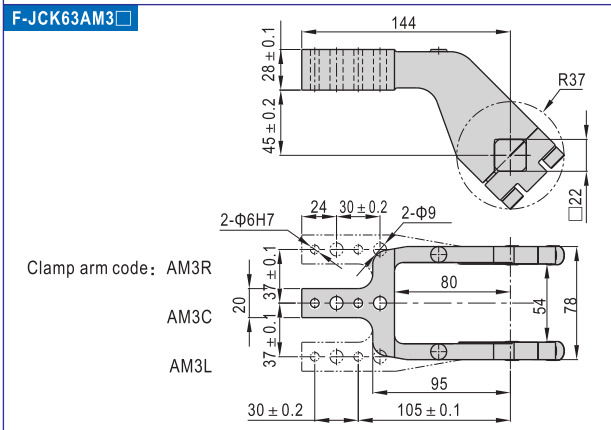

F-JCK50AM4□

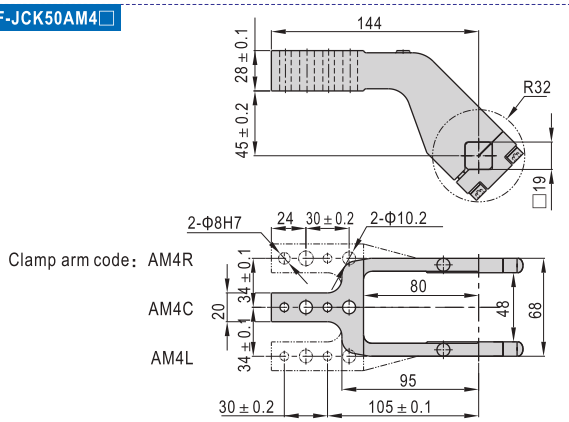

F-JCK63AM4□

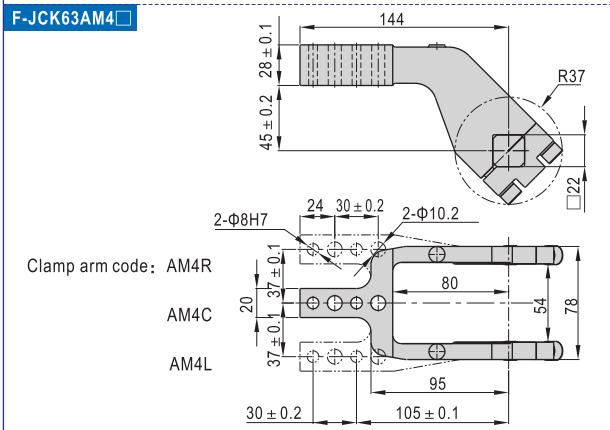

F-JCK80AM1□

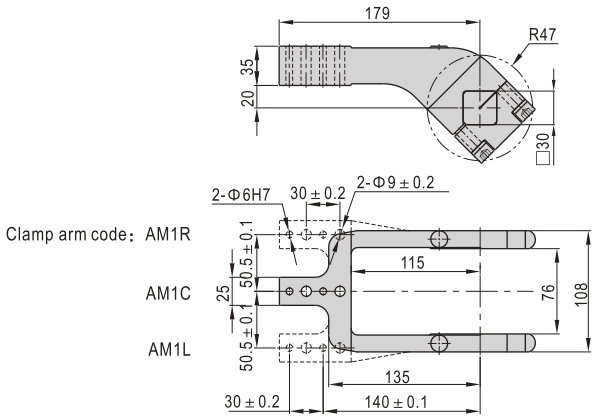

F-JCK80AM2□

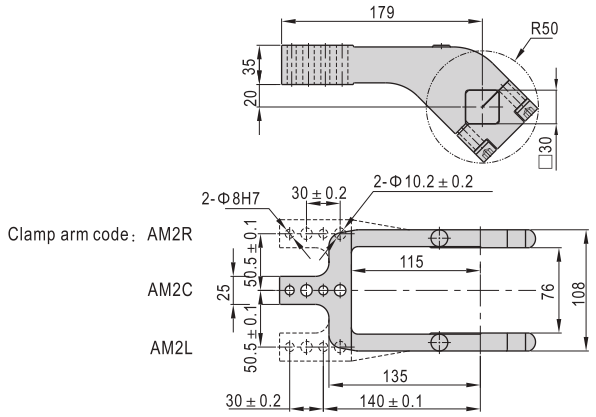

F-JCK80AM3□

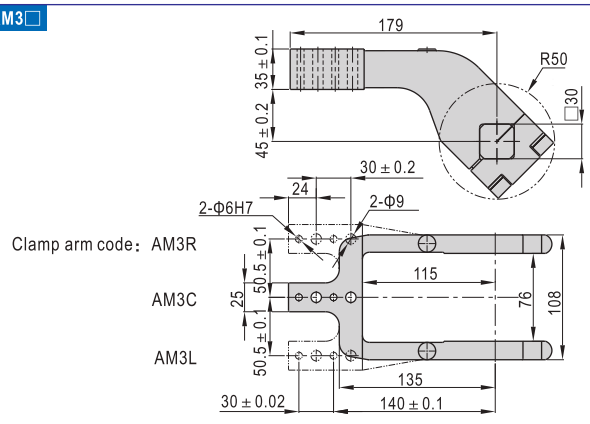

F-JCK80AM4□

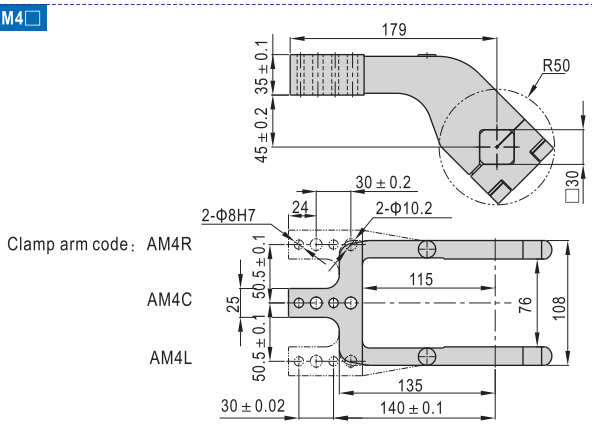

JCK

Specification

Operating range	2mm
Voltage range	10~30V DC
Output type	N.O., PNP, NPN
Rated DC	150mA(max)
Switch frequency	30Hz
Shell material	PBT
Switch status indication	Clamping：Red \ Opering：Yellow
Voltage indication	Green

Ordering code

DS1 KP 63

Model
DS1：Sensor switch

Bore size

Code	Bore size
63	40、50、63
80	80

Output type

KP：PNP
KN：NPN

Hookup

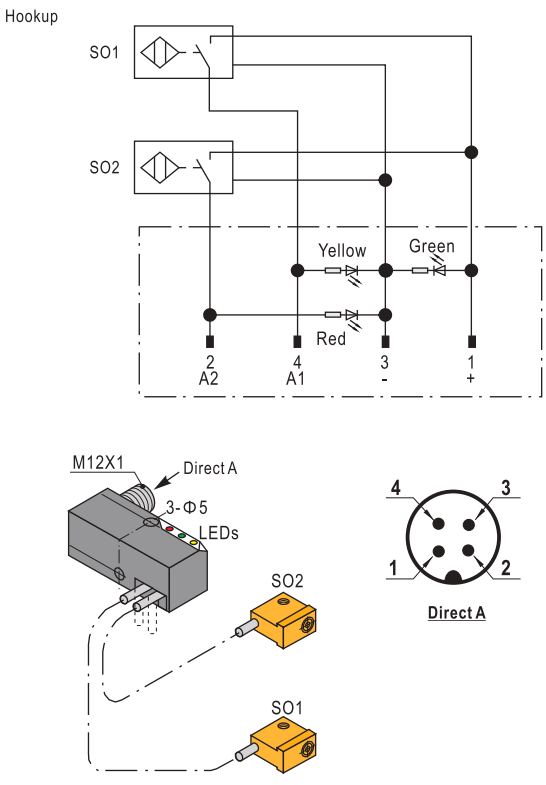

Installation and application of sensor switch

1. Sensor switch is well assembled before leaving factory which is free of adjusting. If you need to change terminals' wiring direction, change new sensor or rearrange angle, please do as follows:

1.1) Steps of changing terminals' wiring direction:

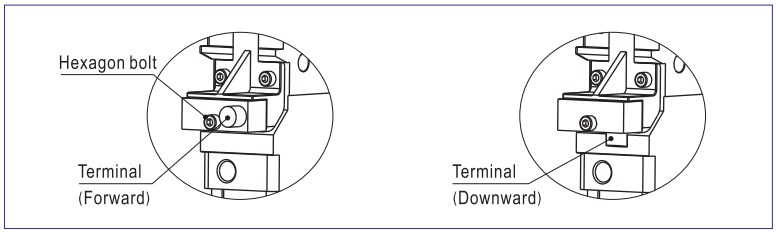

(See figure above.) Unscrew the hexagon bolt→dismount sensor's Terminal→change terminals' wiring direction as you need→remounting→screw up the hexagon bolt.

1.2) Steps of change new sensor switch:

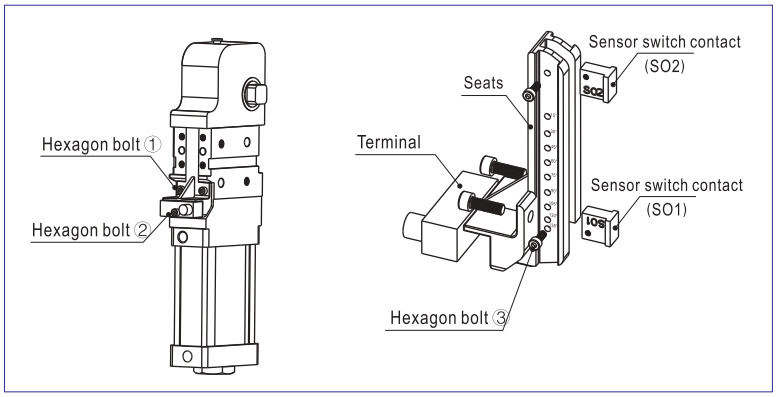

(See figure above.) unscrew two hexagon bolts ①→dismount sensor seats as a whole→unscrew two hexagon bolts ③→dismount two sensor switch contacts(SO1\SO2)→unscrew hexagon bolt ②→remove the sensor switch→choose new sensor switch→replace new sensor switch contact and screw up hexagon bolt ②→replace new wiring box and screw up hexagon bolt ①→finished.

Ecommended lock torque of hexagon bolt is listed in the following table:

Ecommended lock torque of hexagon bolt ①		
Bore size	Hexagon bolt type	Lock torque(N.m)
40、50	M3×0.5	1.2~1.5
63、80	M5×0.8	4.0~5.0

Ecommended lock torque of hexagon bolt ②		
Bore size	Hexagon bolt type	Lock torque(N.m)
40、50、63、80	M5×0.8	4.0~5.0

Ecommended lock torque of hexagon bolt ③		
Bore size	Hexagon bolt type	Lock torque(N.m)
40、50、63、80	M3×0.5	1.2~1.5

1.3) Steps of readjusting angle:

For more details, see latter contents.

1.4) Sensor switch's connection:

Sensor switch's connection need to use relevant male connector, which have separate male connector, and with wire male connector to be choused. The ordering code as below:

Name: On end cable (3 meters length)	Name: L shape cable (3 meters length)	Name: On end connector (rotundity)	Name: L shape connector (rotundity)
Ordering code: X-F-PPVCS	Ordering code: X-F-PPVCL	Ordering code: X-F-PPVCV	Ordering code: X-F-PPVCH

Installation and application

1. Mount the cylinder at desired place with bolts and locating pin after choosing a mounting surface. Connect the cylinder and control valve with joint and rubber hose. To adjust the opening and closure speed, our pneumatic power welding clamp is equipped with return stroke air buffering. Buffering cannot function well if the clamping arm is over-weighted so that clamping arm' weight must be within the allowable limit;
2. Using clamping arm beyond the listed in this catalog is forbidden.
3. Workpiece mounting method:

3.1) When only clamping torque is used for clamping:

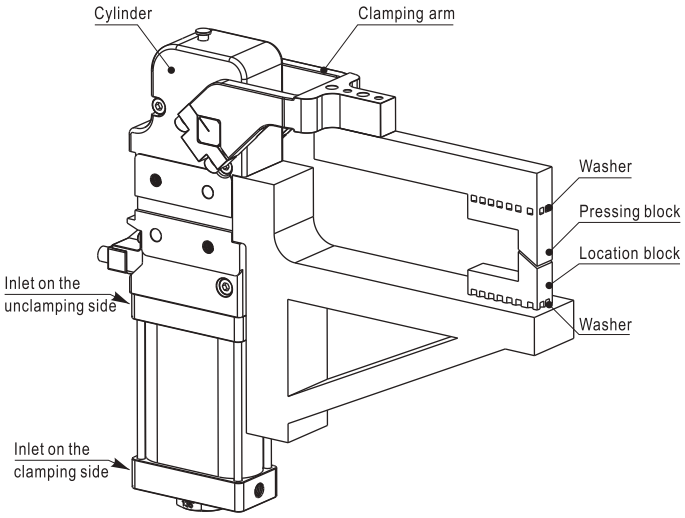

Please follow the steps to mount the workpiece onto the clamping arm:

A) Clamping the arm: supply compressed air through the inlet on the clamping side to keep the arm and pressing block at the closure position simultaneously. Make sure the arm is locked up.

B) Adjusting the clamping gap: adjust the spacer under the mentioned state to make the pressing block in line with the workpiece's thickness. (At this moment no clamping torque is produced theoretically.)

C) Applying clamping torque: Insert the spacer furthermore under the mentioned state until the gap is smaller than the workpiece's thickness and desired clamping torque is produced. (Make sure the mechanism passes the dead position to produce self-locking i.e. the retaining pin is pushed out.)

3.2) When hard braking is used for clamping:

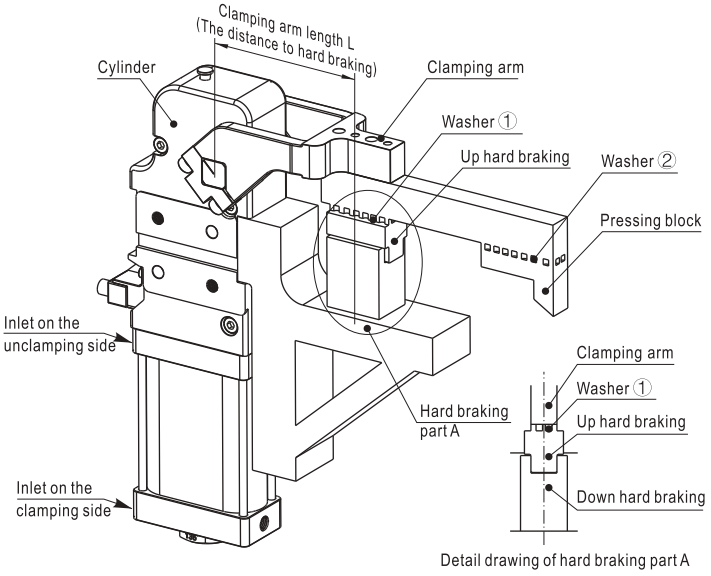

Please follow the steps to mount the workpiece onto the clamping arm:

A) clamping the arm: supply compressed air through the inlet on the closure side to keep the arm and the braking block at the clamping position simultaneously. Make sure the arm is locked up;

B) Adjusting the clamping gap: Adjust washer ① under the mentioned state until the gap between the upside braking block and downside one. (At this moment no clamping torque is produced theoretically.)

C) Applying clamping torque: insert the washer① furthermore under the mentioned state to produce desired clamping torque. (Make sure the mechanism passes the dead position to produce self-locking i.e. the retaining pin is pushed out.)

D) Adjust washer ② under the state mentioned in C to make the pressing block in contact with the workpiece.

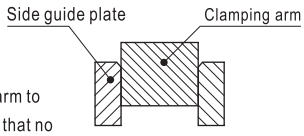

3.3) When side guide plate is mounted:

Side guide plate is mounted on the clamping arm to prevent transverse movement and make sure that no transverse load is applied and that the arm would not be stuck.

4. Angle adjusting method:

Standard adjusting angle range of the pneumatic clamp is 15°~135°. Opening angle can be changed via changing cylinder's stroke distance or the sensor's position;

4.1) Step 1 of adjusting angle--change of sensor's position:

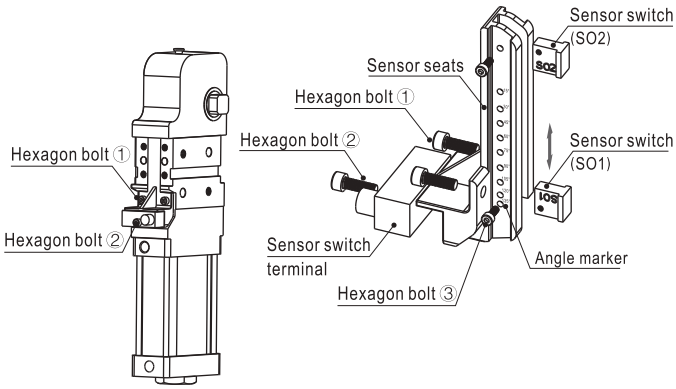

A) Unscrew hexagon bolt ① with inner hexagon wrench to take out the sensor seats;

B) Unscrew hexagon bolt ③ with inner hexagon wrench to take out sensor SO1 and align it to your desired angle indication positon and re-screw up hexagon bolt ③. (Note: when mounting sensor SO1, the number "SO1" should point downward except 15°.)

C) After the sensor's position is adjusted, replace the sensor seats by screwing up hexagon bolt ① with inner hexagon wrench (lock-up torque by related contents).

Note: 1) sensor SO2 controls the cylinder's end stroke position and its mounting position is well set when leaving factory and is not changeable.

2) the sensor wiring box is provided with two outgoing orientations: forward and downward. Unscrew hexagon bolt ② and then you can change the wiring box orientation. After that, screw up hexagon bolt ②.

3) When remounting the sensor fix to its original position, the gap between the sensor and Y-knuckle should be less than 1.5mm. Otherwise, the sensor may not function well.

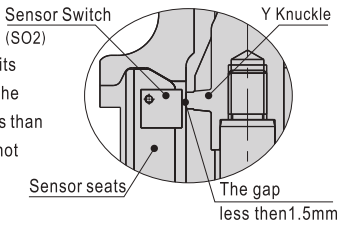

4.2) Step 2 of adjusting angle--change of the cylinder's stroke distance:

The relation between the opening angle of clamping arm and cylinder's stroke distance is listed as follows:

Opening angle\Stroke(mm)	JCK40	JCK50	JCK63	JCK80
15°	20.2	21.6	23.1	36.1
30°	28.1	30.2	33.4	50.5
45°	34.8	37.5	41.6	62.7
60°	41.4	44.6	49.7	74.5
75°	48.0	51.8	57.5	86.3
90°	54.8	59.2	65.7	98.1
105°	61.5	66.4	73.8	109.6
120°	67.4	72.7	81.0	119.5
135°	71.6	77.3	86.2	126.4

During actual operation, the cylinder's stroke can be changed by changing the adjusting screw at the bottom to control the clamping arm's opening angle. Detailed description is as follows:

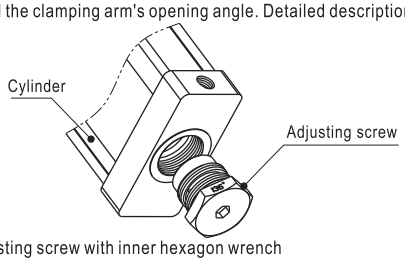

A) Unscrew original adjusting screw with inner hexagon wrench

B) Choose suitable adjusting screw according to actual need (the bottom is marked with corresponding opening angle).

C) Screw up new adjusting screw into the cylinder's end cap.

5. Mounting clamping arm:

The clamping arm is already mounted when leaving factory which can be remounted by yourself horizontally or vertically according to your actual need.

5.1) Mounting clamping arm horizontally:

Unscrew 4 hexagon bolts on both sides of the clamping arm to remove V-shaped block and then the clamping arm for substituting your desired one.

When mounting, please note the direction of the indicating line on the pivot.

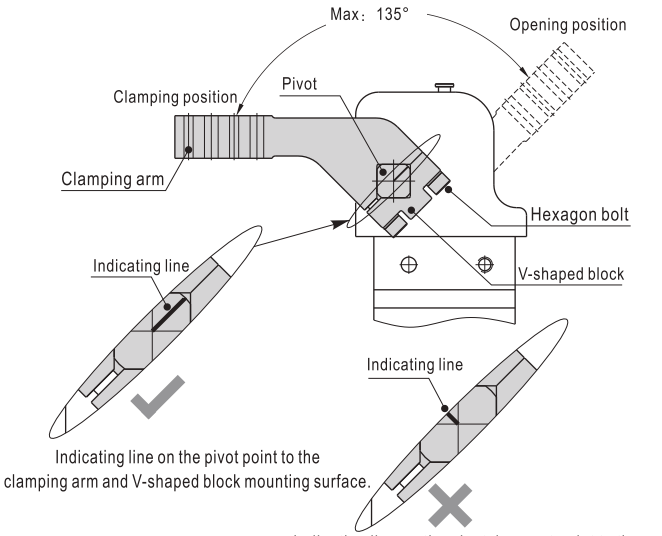

5.2) Mounting clamping arm vertically:

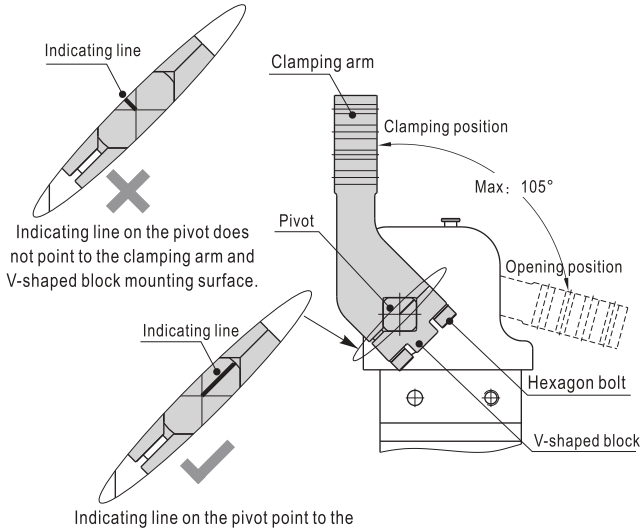

5.3) V-shaped block mounting：

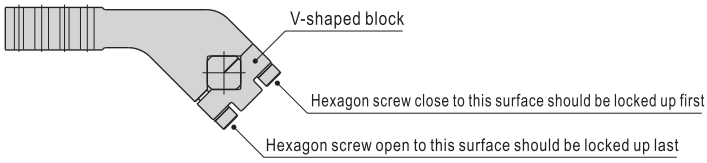

5.4) Holding torque of clamping arm (recommended):

When holding clamping arm, please choose recommended value in the following list:

Bore size	Bolt type	Holding torque (N.m)
40	M6 × 1.0	13.8
50	M6 × 1.0	13.8
63	M8 × 1.25	33.0
80	M10 × 1.5	66.0

6. Self-lock function:

At the end of stroke, the crank-slider mechanism passes the dead point and gets self-locked up. The retaining pin gets pushed up at this moment. Even when compressed air is off, the cylinder can remain at closure state for safety. To open self-locking of the crank-slider mechanism, push down the retaining pin when compressed air is off.

Warning:

Pushing down the retaining pin may cause clamping arm to spring off at closure state.

So when ushing the pin, please get yourself away from the clamping arm's operation range.

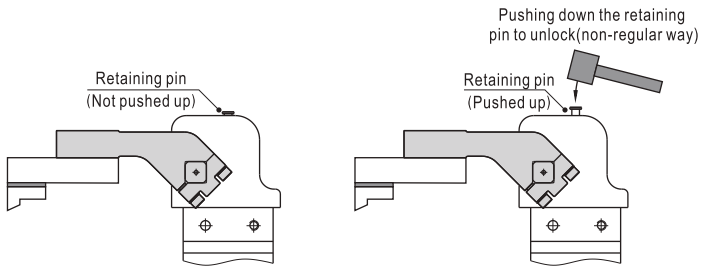

Retaining pin not pushed up, crank-slider mechanism not self-locked

Retaining pin pushed up, crank-slider mechanism self-locked

Product series

Series	Acting type	Bore size	Collocation of sensor switch
TWH	Double acting Single acting-Pull type	20 25 32 40 50 63 80	CS1–J DS1–J CS1–G DS1–G
TWM	Double acting Single acting-Pull type	50	CS1–J DS1–J CS1–G DS1–G
TWG	Double acting Single acting-Pull type	32 40 50	CS1–T DS1–T
TWQ	Double acting Single acting-Pull type	20 25 32 40 50	CS1–J DS1–J CS1–G DS1–G
Page	368	368	371	374		381

Installation and application

1. When load changes in the work, the cylinder with abundant output capacity shall be selected.
2. Relative cylinder with high temperature resistance or corrosion resistance shall be chosen under the condition of high temperature or corrosion.
3. Necessary protection measure shall be taken in the environment with higher humidity, much dust or water drops, oil dust and welding dregs.
4. Dirty substances in the pipe must be eliminated before cylinder is connected with pipeline. Impurities must be prevented from entering the cylinder.
5. The medium used by cylinder shall be filtered to 40 μ m or below.
6. The lateral load of the cylinder shall not exceed the allowable value in operation so as to maintain its normal operation and extend its service life.
7. Anti-freezing measure shall be adopted under low temperature environment to prevent the water freezing in cylinder.
8. If the cylinder is dismantled and stored for a long time, please conduct anti-rust treatment to the surface. Anti-dust caps shall be added in air inlet and outlet ports.

Symbol

TWH(TWM)

TWH－S(TWM-S)

TTH(TTM)

TTH－S(TTM-S)

TDH(TDM)

TDH－S(TDM-S)

Product feature

1. JIS standard is implemented.
2. Widening the piston rod can effectively improve the impact resistance ability of the cylinder.
3. Heavy type stopper cylinder has shock absorber adjustable shock absorber, which can reliably absorb the impact energy.
4. Shockless stopper cylinder is equipped with self-lock device, which can prevent the returning of rebound of rocker caused by bar objects.
5. Several series and specifications for stopper cylinders can be selected.

Specification

Series		TWH							TWM
Bore size(mm)		20	25	32	40	50	63	80	50
Fluid		Air(to be filtered by 40 μ m filter element)							
Action		Double acting type、Single acting-pull type							
Operating pressure	Double acting type	0.15~1.0MPa(23~145psi)							
	Single acting-pull type	Φ20:0.25~1.0MPa(35~145psi) Others:0.2~1.0MPa(28~145psi)							
Proof pressure		1.5MPa(215psi)							
Temperature ℃		-20~80							
Range of stroke tolerance		$^{+1.0}_{0}$							
Cushion type		Bumper							
Lubrication		Non required							
Mounting type		Flange							
Stopper type		Shock less stopper(With non adjustable absorber)			Shock less stopper(With adjustable absorber)				
Port size ①		M5 × 0.8			1/8"		1/4"		1/8"
Sensor's thread		M5 × 0.5				M8 × 1.0			

① G thread and NPT thread are available. Add) Refer to Page 381~402 for details of sensor switch.

Ordering code

TWH 50 × 30 S K □ G

Model

TWH: Stopper cylinder(Double acting type)
TDH: Stopper cylinder (Built–in spring double acting type)
TTH: Stopper cylinder(Single acting-Pull type)
TWM: Stopper cylinder(Double acting type)
TDM: Stopper cylinder (Built–in spring double acting type)
TTM: Stopper cylinder(Single acting-Pull type)

Thread type ①

G: G
T: NPT

Self-lock function

Blank: Without self-lock
F: With self-lock

Bore size

Model	Bore size
TWH, TDH, TTH	20 25 32 40 50 63 80
TWM, TDM, TTM	50

Stroke

Bore size	Standard stroke (mm)
20, 25	15
32	20
40, 50, 63	30
80	40

Stopper

Model	Stopper
TWH TDH TTH	L: shockless stopper (Non–adjustable absorber)
	K: Shockless stopper (adjustble absorber)
TWM, TDM TTM	K: Shockless stopper (adjustble absorber)

Magnet

Blank: Without magnet
S: With magnet

① When the thread is standard, the code is blank.

Note) The buffer is not adjustable if the bore size is 20 and 25. It is adjustable if the bore is over 32.

Lateral Load and Operation pressure

TWH20, 25, 32

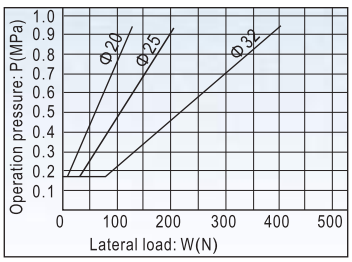

TWH40, 50, 63, 80

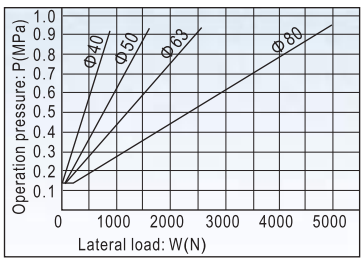

TWM50

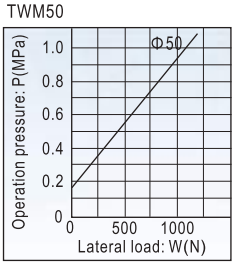

How to select

Drawing I

Bore size Φ20, Φ25, Φ32. Friction index μ =0.1

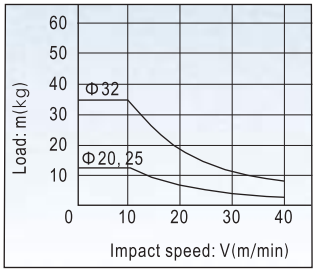

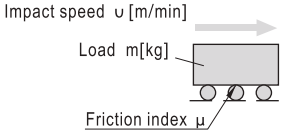

Note:
When the speed is the same, the friction index more higher, the Load more lighter. so the rubbing surface is smoother is better.

Drawing II

Bore size Φ40, Φ50, Φ63, Φ80. Friction index μ =0.1

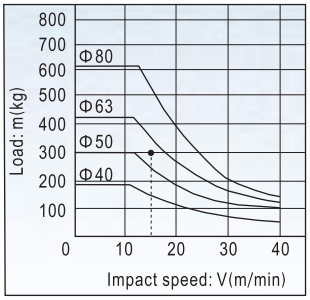

Selection way:
When load is 300kg, speed is 15m/min, and friction factor is 0.1, draw a horizontal line in the 300 position of Y axis in Table 3 to join with X axis' .15m/min φ63 cylinder used in this application will be selected.

Inner structure and material of major parts

TTH–K

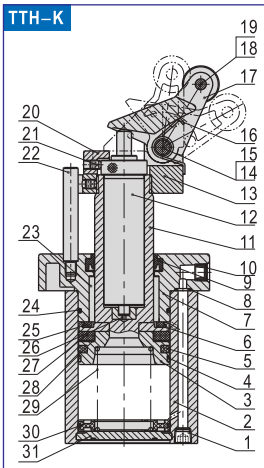

No.	Item	Material	No.	Item	Material
1	Countersink screw	Carbon steel	17	Rocker	Cast steel\ Nodular Cast iron
2	Body	Aluminum alloy	18	PIN	S45C grinding rod
3	Piston	Aluminum alloy	19	PIN gasket	S45C grinding rod
4	Wear ring	Wear resistant material	20	Obstruct block	Powder metallurgy
5	Piston seal	NBR	21	Countersink screw	Carbon steel
6	Magnet washer	Aluminum alloy	22	Leader	S45C grinding rod
7	Front cover	Aluminum alloy	23	Sliding bushing	Wear resistant material
8	O-ring	NBR	24	O-ring	NBR
9	Packing	NBR	25	Bumper	TPU
10	Silencer	Sintered bronze particle	26	Absorber fix and adjust seat	POM
11	Piston rod	S45C grinding rod			
12	Shock absorber		27	Magnet	Plastic
13	Fixed seat	Nodular Cast iron	28	Magnet washer	NBR
14	PIN	S45C grinding rod	29	Spring	Spring steel
15	Clip	Spring steel	30	Cushion	POM
16	Torsion spring	Spring steel	31	Back cover	Aluminum alloy

TTM–K

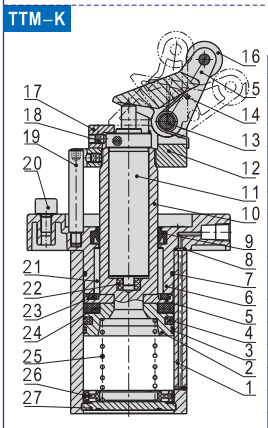

No.	Item	Material	No.	Item	Material
1	Body	Aluminum alloy	15	Rocker	Nodular cast iron
2	Piston	Aluminum alloy	16	Roller	Powder metallurgy
3	Wear ring	Wear resistant material	17	Obstruct black	Powder metallurgy
4	Piston seal	NBR	18	Countersink screw	Carbon steel
5	Magnet washer	Aluminum alloy	19	Leader	S45C grinding rod
6	Front cover	Aluminum alloy	20	Cancel cap	Aluminum alloy
7	O–ring	NBR	21	Sliding bushing	Bronze powder metallurgy
8	O–ring	NBR	22	Absorber fix and adjust seat	POM
9	Gasket	NBR	23	Bumper	TPU
10	Piston rod	S45C grinding rod	24	Magnet	Plastic
11	Shock absorber		25	Spring	Spring steel
12	Mounting seat	Nodular cast iron	26	Bumper	TPU
13	PIN	S45C grinding rod	27	Back cover	Aluminum alloy
14	Torsion spring	Spring steel			

Dimensions

Non-adjustable absorber(TWH-L(F), TDH-L(F), TTH-L(F))

Φ20, Φ25

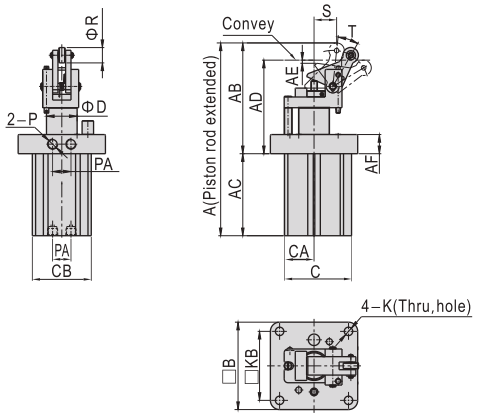

Bore size\Item	A	AB	AC	AD	AE	AF	B	C	CA	CB
20	129	74	55	60	2.5	8	48	40	18	36
25	135.5	78	57.5	64	2.5	12	58	45	20	40

Bore size\Item	D	K	KB	P	PA	R	S	T
20	16	4.5	40	M5×0.8	12	12	16	28
25	16	6.5	47	M5×0.8	16	12	16	28

Note:The type with magnet and the type without magnet have the same dimension.
The type with self-lock and the type without selflock have the same dimension.

Adjustable absorber(TWH-K(F),TDH-K(F),TTH-K(F))

Φ32~Φ80

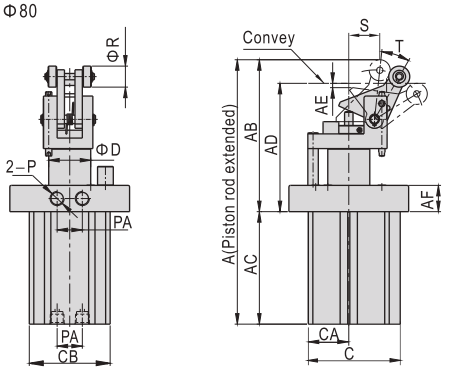

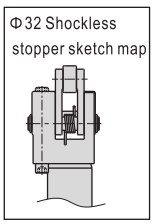

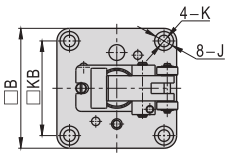

Bore size\Item	A	AB	AC	AD	AE	AF	B	C	CA
32	152.5	87	65.5	73.5	1.5	16	67	51.5	23
40	191	112	79	92.5	3.5	16	82	62	26.5
50	211	128	83	107.5	2	20	93	72	32
63	245.5	144.5	101	122	3.5	25	114	87.5	38.5
80	299.5	171.5	128	145.5	3.5	25	138	109	49

Bore size\Item	CB	D	J	K	KB	P	PA	R	S	T
32	46	20	11	6.5	53	1/8"	16	12	18.5	28
40	53	25	11	6.5	65	1/8"	16	20	21	26
50	64	32	14	9	73	1/8"	18	20	26	24
63	77	40	18	11	90	1/4"	24	20	30	24
80	98	50	20	13	110	1/4"	30	25	37	23

Note:The type with magnet and the type without magnet have the same dimension.
The type with self-lock and the type without selflock have the same dimension.

TW

Dimensions

Adjustable absorber(TWM-K(F), TDM-K(F), TTM-K(F))

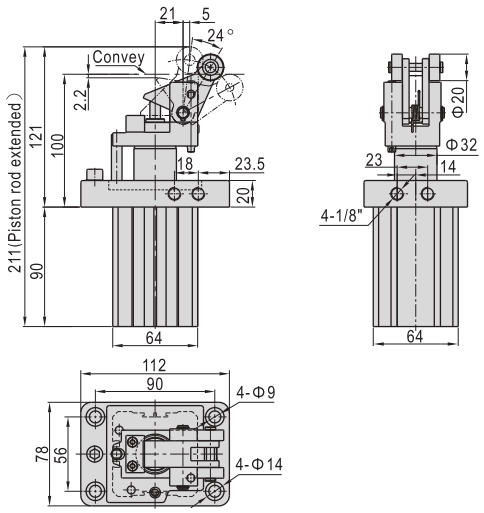

Note: The type with magnet and the type without magnet have the same dimension.

Installation and application

1. Function & Operating Manual

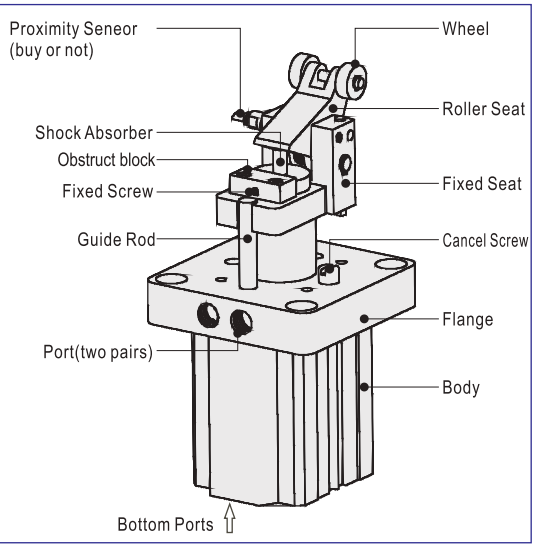

2. Adjustment of Shock Absorber

2.1) The Shock Absorber had been adjusted before the cylinder finished.
2.2) The client can adjust it if necessary.
2.3) The steps are as following.
a. Loose the fixed screw.
b. Turn the Shock Absorber to adjust the cushion ability.
c. Fasten the fixed screw.

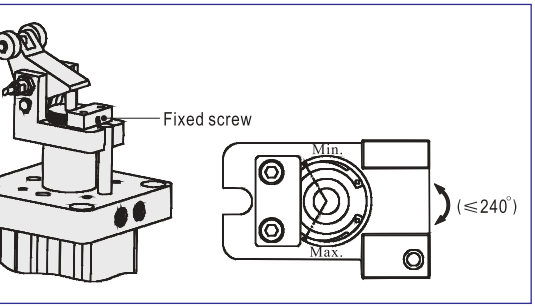

3. Multi-working position

Even the flange is fixed, just adjust the mounting position of guide rod will be changed the working direction of the stopper cylinder.

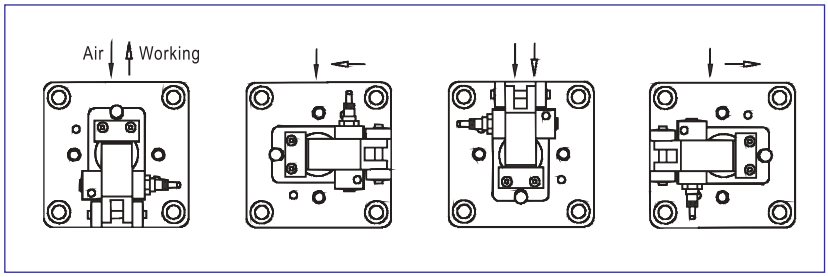

4. Working Forbidden

4.1) This function is used to cancel the stop action of the cylinder, and make the work piece pass easy.
4.2) The steps are as following.
a. Screw off the cancel screw from the flange.
b. Put the roller seat down.
c. Fasten the cancel screw in the screw hole on the fixed seat and the tail of the cancel screw should be inserted in the hole made on the roller seat.

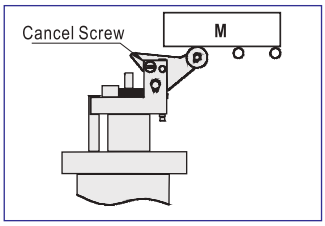

5. How to use stopper function

5.1) When the shock absorber is impacted deeply, added impact energy must be avoided. The cylinder without shock absorber cann't be impacted by load, otherwise mechanical failure may be caused.
5.2) The maximum impact kinetic energy acting on the piston rod cann't exceed the allowable maximum values, otherwise mechanical failure may be caused.

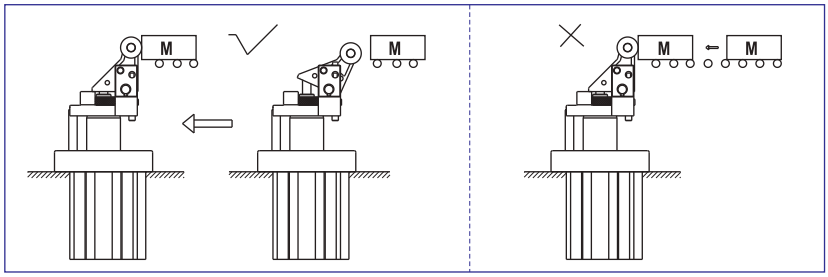

6. Self-locking

Unusually, when the stopper cylinder is operating, work piece will be rebound as the effect of shocker absorber. In order to keep the work piece steady, we have developed this self-locking device.

The auto–lock equipment can lock the rocker arm to avoid the products jumping back

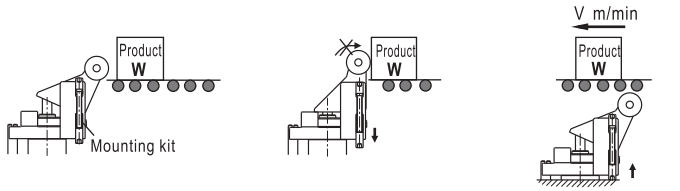

Original position of roller　　Lock the roller　　Unlock the roller

Specification

Bore size(mm)		32	40	50
Fluid		Double acting type、Single acting-pull type		
Action		Air(to be filtered by 40 μ m filter element)		
Operating pressure	Double acting type	0.15~1.0MPa(23~145psi)		
	Single acting-pull type	0.2~1.0MPa(28~145psi)		
Proof pressure		1.5MPa(215psi)		
Temperature ℃		-20~80		
Range of stroke tolerance		$^{+1.0}_{0}$		
Cushion type		Bumper		
Lubrication		Non required		
Mounting type		Flange(The mounting high can be changed)		
Stopper type		Round rod, Flat rod, Roller shock less stopper(with absorber)		
Port size ①		1/8"		

① G thread and NPT thread are available. Add) Refer to Page 381~402 for details of sensor switch.

Symbol

Product feature

1. JIS standard is implemented.
2. Widening the piston rod can effectively improve the impact resistance ability of the cylinder.
3. The installation height is adjustable and several rod end modes can be selected. The cushion effect of the stopper cylinder with shock absorber is better.
4. Shockless stopper cylinder is attached with self-lock device, which can prevent the returning of rebound of rocker caused by bar objects.
5. Several series and specifications for stopper cylinders can be selected.

Ordering code

TWG 50 × 20 S K □ G

Model
- TWG: Stopper cylinder (Adjustable for height , double acting type)
- TTG: Stopper cylinder (Adjustable for height , single acting-pull type)

Bore size
32 40 50

Stroke

Bore size	Stroke (mm)
32	10 15 20
40, 50	20 25 30

Thread type
- G: G
- T: NPT

Self-lock function
- Blank: Without self-lock
- F: With self-lock

Stopper
- C: Round rod
- B: Flat rod
- R: Roller
- K: Shockless stopper (adjustble absorber)

Magnet
- Blank: Without magnet
- S: With magnet

Lateral Load and Operation pressure

Lateral load & operation pressure

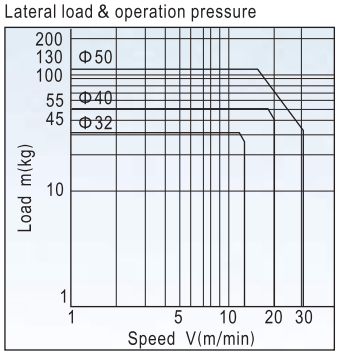

Round rod, Flat rod, Roller

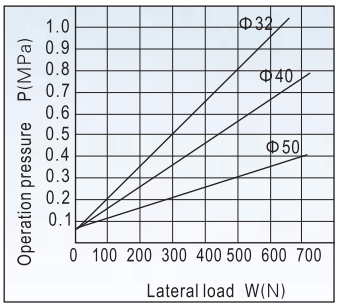

TW

Inner structure and material of major parts

TTG-K

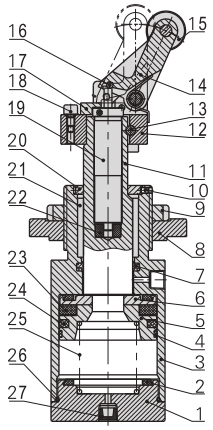

No.	Item	Material
1	Back cover	Aluminum alloy
2	Bumper	TPU
3	Body	Aluminum alloy
4	Wear ring	Wear resistant material
5	Piston	Aluminum alloy
6	Magnet washer	Aluminum alloy
7	Packing	NBR
8	Flange	Aluminum alloy
9	Fixed nut	Carbon steel
10	Countersink screw	Carbon steel
11	Piston rod	Carbon steel with 20 μ m chrome plated
12	Fixed seat	Nodular cast iron
13	Lock pin	Cast steel
14	Rocker	Cast steel
15	Roller	Mild steel
16	Steel ball	Stainless steel
17	Obstruct block	Powder metallurgy
18	Cancel cap	Aluminum alloy
19	Shock absorber	
20	Lock ring	Powder metallurgy
21	Sliding bushing	Wear resistant material
22	Absorber fix and adjust seat	POM
23	Magnet	Plastic
24	Piston seal	NBR
25	Spring	Spring steel
26	O-ring	NBR
27	Silence	Sintered bronze particle

Dimensions

Round rod(TWG-C, TTG-C)

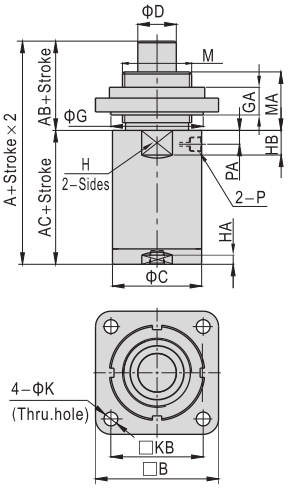

Bore size\Item	A	AB	AC	B	C	D	G	GA
32	95	38	57	70	40	20	50	18
40	100	38	62	80	47	25	60	18
50	100	38	62	80	58	25	60	18

Bore size\Item	H	HA	HB	K	KB	M	MA	P	PA
32	37	6	15	9	50	M36×1.5	38	1/8"	9
40	44	6	16	9	60	M45×1.5	38	1/8"	12
50	54	6	16	9	60	M45×1.5	38	1/8"	10

Note: The type with magnet and the type without magnet have the same dimension.

Flat rod(TWG-B, TTG-B)

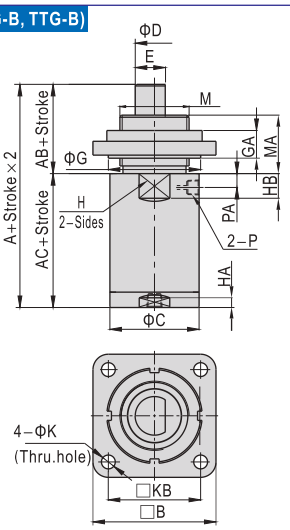

Bore size\Item	A	AB	AC	B	C	D	E	G	GA
32	95	38	57	70	40	20	18.5	50	18
40	100	38	62	80	47	25	22.5	60	18
50	100	38	62	80	58	25	22.5	60	18

Bore size\Item	H	HA	HB	K	KB	M	MA	P	PA
32	37	6	15	9	50	M36×1.5	38	1/8"	9
40	44	6	16	9	60	M45×1.5	38	1/8"	12
50	54	6	16	9	60	M45×1.5	38	1/8"	10

Note: The type with magnet and the type without magnet have the same dimension.

Shockless stopper(TWG-K(F), TTG-K(F))

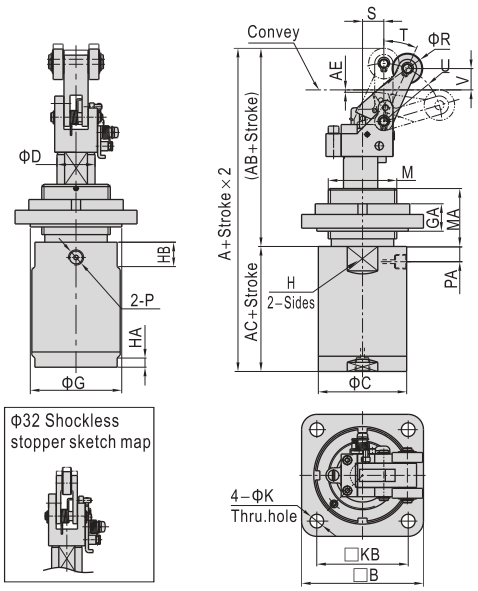

Φ32 Shockless stopper sketch map

Bore size\Item	A	AB	AC	AE	B	C	D	G	GA
32	147.5	90.5	57	1	70	40	20	50	18
40	172	110	62	1.5	80	47	25	60	18
50	172	110	62	1.5	80	58	25	60	18

Bore size\Item	H	HA	HB	K	KB	M	MA	P	PA
32	37	6	15	9	50	M36×1.5	38	1/8"	9
40	44	6	16	9	60	M45×1.5	38	1/8"	12
50	54	6	16	9	60	M45×1.5	38	1/8"	10

Bore size\Item	R	S	T	U	V
32	15	11.5	28	24.5	4.5
40	20	14	24	38	14
50	20	14	24	38	14

Note: The type with magnet and the type without magnet have the same dimension.
The type with self-lock and the type without self-lock have the same dimension.

Roller(TWG-R, TTG-R)

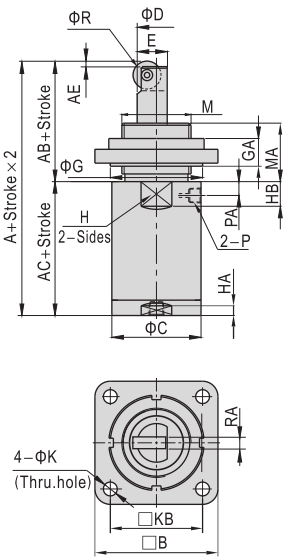

Bore size\Item	A	AB	AC	AE	B	C	D	E	G	GA	H
32	116	59	57	4	70	40	20	18.5	50	18	37
40	123	61	62	4	80	47	25	22.5	60	18	44
50	123	61	62	4	80	58	25	22.5	60	18	54

Bore size\Item	HA	HB	K	KB	M	MA	P	PA	R	RA
32	6	15	9	50	M36×1.5	38	1/8"	9	20	8
40	6	16	9	60	M45×1.5	38	1/8"	12	20	8
50	6	16	9	60	M45×1.5	38	1/8"	10	20	8

Note: The type with magnet and the type without magnet have the same dimension.

TW

Installation and application

1. Function & Operating Manual

The appearance of Stopper

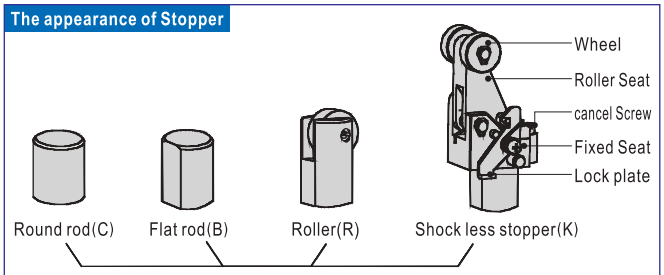

TWG Series appearance

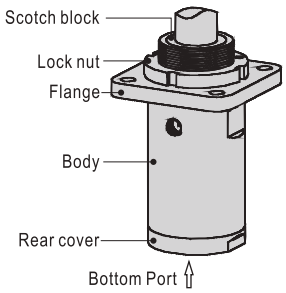

TWQ Series appearance

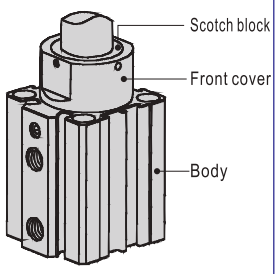

2. Adjustment of Shock Absorber

2.1) The Shock Absorber had been adjusted before the cylinder finished.

2.2) The client can adjust it if necessary.

2.3) The steps are as following.

a. Loose the fixed screw.

b. Turn the Shock Absorber to adjust the cushion ability.

c. Fasten the fixed screw.

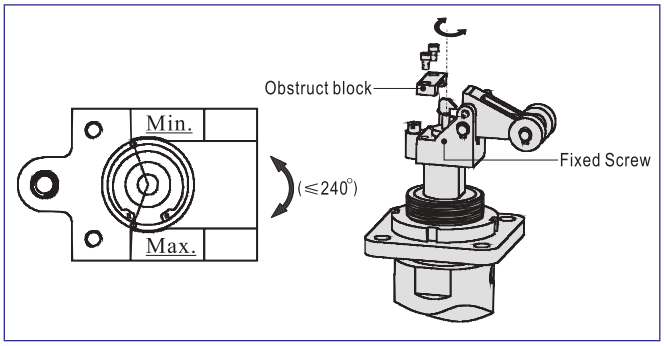

3. Multi-working position

3.1) If the body is fixed, just to adjust the scotch block, the working direction of the cylinder will be changed.

3.2) For TWG series, adjusting the position of flange can be changed the working height.

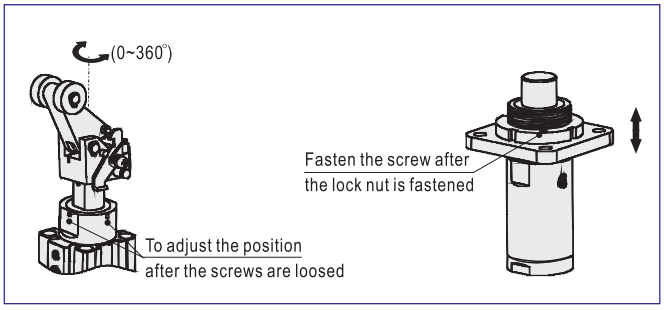

4. Working Forbidden(Shock less stopper(K))

4.1) This function is used to cancel the stop action of the cylinder, and make the work piece pass easy.

4.2) The steps are as following.

a. Screw off the cancel screw from the flange.

b. Put the roller seat down.

c. Fasten the cancel screw in the screw hole on the fixed seat and the tail of the cancel screw should be inserted in the hole made on the roller seat.

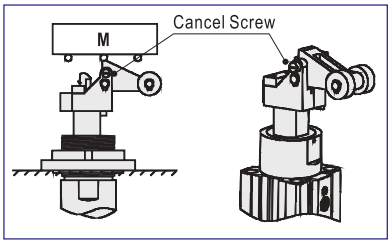

5. How to use stopper function

5.1) When the shock absorber is impacted deeply, added impact energy must be avoided. The cylinder without shock absorber cann't be impacted by load, otherwise mechanical failure may be caused.

5.2) The maximum impact kinetic energy acting on the piston rod cann't exceed the allowable maximum values, otherwise mechanical failure may be caused.

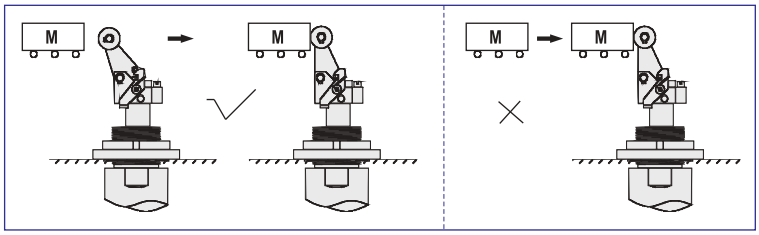

6. Self-locking

Unusually, when the stopper cylinder is operating, work piece will be rebound as the effect of shocker absorber. In order to keep the work piece steady, we have developed this self-locking device.

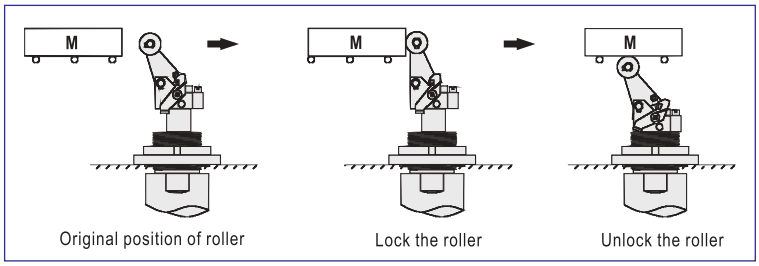

TW

Specification

Bore size(mm)		20	25	32	40	50
Fluid		Double acting type、Single acting-pull type				
Action		Air(to be filtered by 40 μ m filter element)				
Operating pressure	Double acting type	0.15~1.0MPa(23~145psi)				
	Single acting-pull type	Φ20: 0.25~1.0MPa(35~145psi) others: 0.2~1.0MPa(28~145psi)				
Proof pressure		1.5MPa(215psi)				
Temperature ℃		-20~80				
Range of stroke tolerance		$^{+1.0}_{0}$				
Cushion type		Bumper				
Lubrication		Non required				
Mounting type		Thru hole or screw hole				
Stopper type		Round rod, Flat rod/Roller		Round rod, Flat rod/Roller, Shock less stopper(with absorber)		
Port size ①		M5×0.8		1/8"		

① G thread and NPT thread are available. Add) Refer to Page 381~402 for details of sensor switch.

Symbol

Product feature

1. JIS standard is implemented.
2. Widening the piston rod can effectively improve the impact resistance ability of the cylinder.
3. The installation height is adjustable and several rod end modes can be selected. The stopper cylinder with shock absorber has a better cushion effect.
4. Shockless stopper cylinder is attached with self-lock device, which can prevent the returning of rebound of rocker caused by bar objects.
5. Several series and specifications for stopper cylinders can be selected.

Ordering code

TWQ 50 × 20 S K □ G

Model
- TWQ: Stopper cylinder (Height locked, double acting type)
- TTQ: Stopper cylinder (Height locked , single acting-pull type)

Bore size
20 25 32 40 50

Stroke

Bore size	Stroke (mm)
20, 25, 32	10 15 20
40, 50	20 25 30

Magnet
- Blank: Without magnet
- S: With magnet

Stopper
- C: Round rod
- B: Flat rod
- R: Roller
- K: Shockless stopper (adjustble absorber)

Self-lock function
- Blank:Without self-lock
- F:With self-lock

Thread type ①
- G:G
- T:NPT

① When the thread is standard, the code is blank.

TW

How to select

Round rod, Flat rod, roller

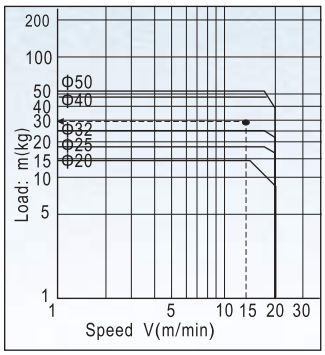

Shockless stopper
(With adjustable absorber)

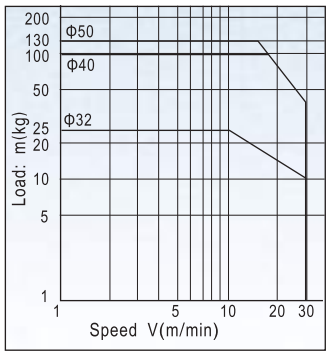

Lateral load & operation pressure Round rod, Flat rod, Roller

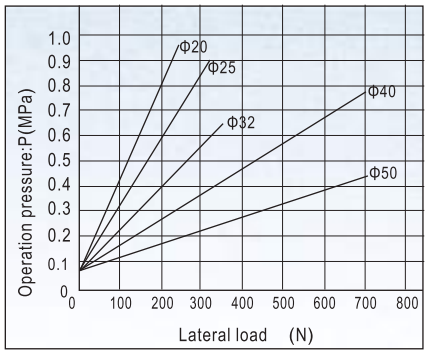

Installation and application

Please refer to page 373 for details.

Inner structure and material of major parts

TTQ-R

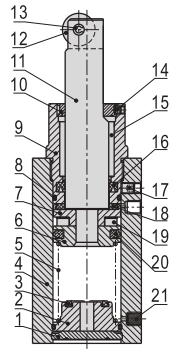

No.	Item	Material
1	Back cover	Aluminum alloy
2	Spring holder	Aluminum alloy
3	Bumper	TPU
4	Body	Aluminum alloy
5	Spring	Spring steel
6	Piston	Aluminum alloy
7	Magnet holder	Aluminum alloy
8	O-ring	NBR
9	Front cover	Aluminum alloy
10	Lock ring	Powder metallurgy
11	Piston rod	Carbon steel with 20 μm chrome plated
12	Roller	Cast steel
13	Spring pin	Spring steel
14	Countersink screw	Carbon steel
15	Sliding bushing	Bronze powder metallurgy
16	Packing	NBR
17	Countersink screw	Carbon steel
18	Bumper	TPU
19	Magnet	Plastic
20	Piston seal	NBR
21	Silencer	Sintered bronze particle

TTQ-K(Φ32~Φ50)

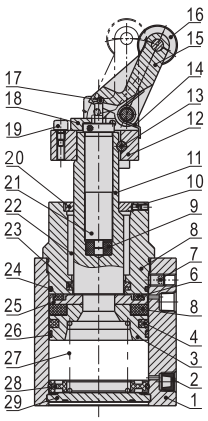

No.	Item	Material
1	Body	Aluminum alloy
2	Silencer	Sintered bronze particle
3	Piston	Aluminum alloy
4	Piston seal	NBR
5	Magnet	Plastic
6	Bumper	TPU
7	Countersink screw	Carbon steel
8	Front cover	Aluminum alloy
9	Absorber fix and adjust seat	POM
10	Countersink screw	Carbon steel
11	Piston rod	Carbon steel with 20 μm chrome plated
12	Mounting seat	Nodular cast iron
13	Lock pin	Cast steel
14	Torsion spring	Spring steel
15	Rocker	Cast steel
16	Roller	Mild steel
17	Steel ball	Free cutting steel
18	Obstruct block	Powder metallurgy
19	Cancel cap	Aluminum alloy
20	Locking cushion	Powder metallurgy
21	Shock absorber	
22	Bushing	Sintered bronze particle
23	O-ring	NBR
24	O-ring	NBR
25	Magnet washer	Aluminum alloy
26	Bumper	Wear resistant material
27	Spring	Spring steel
28	Cushion	POM
29	Back cover	Aluminum alloy

Dimensions

Round rod(TWQ-C, TTQ-C)

Φ20, Φ25

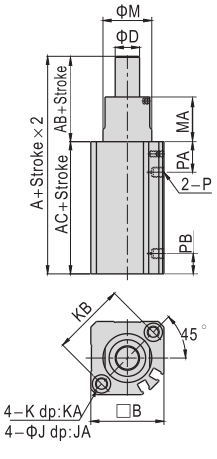

Φ32, Φ40, Φ50

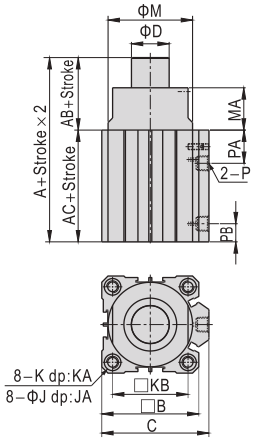

Bore size\Item	A	AB	AC	B	C	D	J	JA
20	67	22	45	36	-	12	9	7
25	68	20	48	40	-	16	9	7
32	68	20	48	45	49.5	20	9	7
40	80.5	28	52.5	53	57	25	9	7
50	82	28	54	64	71	25	11	8

Bore size\Item	K	KA	KB	M	MA	P	PA	PB
20	M6×1.0	10	36	24	22	M5×0.8	16.5	9
25	M6×1.0	10	40	30	20	M5×0.8	18	9
32	M6×1.0	10	34	36	20	1/8"	20	10
40	M6×1.0	10	40	44	28	1/8"	20	11
50	M8×1.25	14	50	56	28	1/8"	22	12

Note: The type with magnet and the type without magnet have the same dimension.

Flat rod(TWQ-B, TTQ-B)

Φ20, Φ25

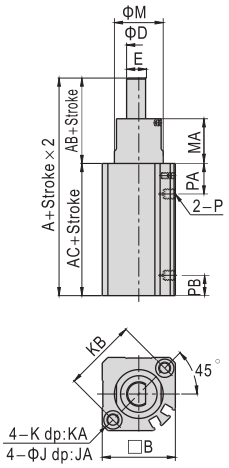

Φ32, Φ40, Φ50

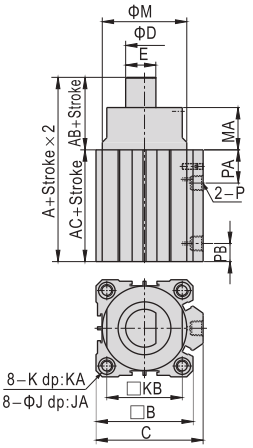

Bore size\Item	A	AB	AC	B	C	D	E	J	JA
20	67	22	45	36	-	12	10	9	7
25	68	20	48	40	-	16	14	9	7
32	68	20	48	45	49.5	20	18.5	9	7
40	80.5	28	52.5	53	57	25	22.5	9	7
50	82	28	54	64	71	25	22.5	11	8

Bore size\Item	K	KA	KB	M	MA	P	PA	PB
20	M6×1.0	10	36	24	22	M5×0.8	16.5	9
25	M6×1.0	10	40	30	20	M5×0.8	18	9
32	M6×1.0	10	34	36	20	1/8"	20	10
40	M6×1.0	10	40	44	28	1/8"	20	11
50	M8×1.25	14	50	56	28	1/8"	22	12

Note: The type with magnet and the type without magnet have the same dimension.

Shockless stopper (TWQ-K(F), TTQ-K(F))

Φ32, Φ40, Φ50

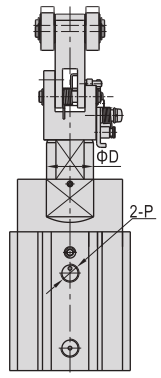

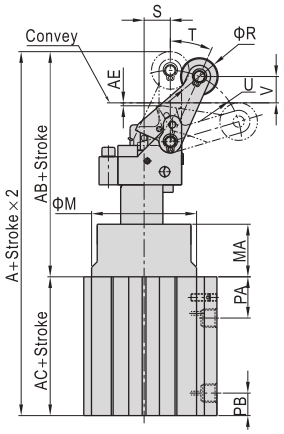

Φ32 Shockless stopper sketch map

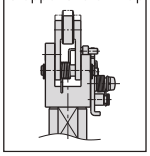

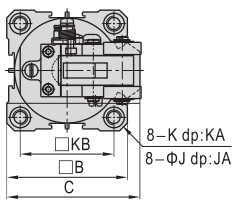

Bore size\Item	A	AB	AC	AE	B	C	D	J	JA	K	KA	KB
32	120.5	72.5	48	1	45	49.5	20	9	7	M6×1.0	10	34
40	152.5	100	52.5	1.5	53	57	25	9	7	M6×1.0	10	40
50	154	100	54	1.5	64	71	25	11	8	M8×1.25	14	50

Bore size\Item	M	MA	P	PA	PB	R	S	T	U	V
32	36	20	1/8"	20	10	15	11.5	28	24.5	4.5
40	44	28	1/8"	20	11	20	14	24	38	14
50	56	28	1/8"	22	12	20	14	24	38	14

Note: The type with magnet and the type without magnet have the same dimension.
The type with self-lock and the type without self-lock have the same dimension.

Roller(TWQ-R, TTQ-R)

Φ20, Φ25

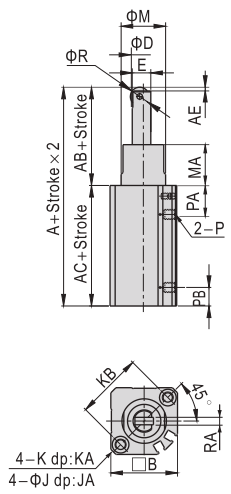

Φ32, Φ40, Φ50

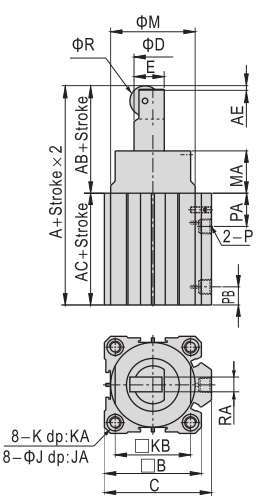

Bore size\Item	A	AB	AC	AE	B	C	D	E	J	JA
20	78	33	45	2	36	-	12	10	9	7
25	81	33	48	2	40	-	16	14	9	7
32	87	39	48	3	45	49.5	20	18.5	9	7
40	103.5	51	52.5	4	53	57	25	22.5	9	7
50	105	51	54	4	64	71	25	22.5	11	8

Bore size\Item	K	KA	KB	M	MA	P	PA	PB	R	RA
20	M6×1.0	10	36	24	22	M5×0.8	16.5	9	10	4
25	M6×1.0	10	40	30	20	M5×0.8	18	9	12	6
32	M6×1.0	10	34	36	20	1/8"	20	10	20	8
40	M6×1.0	10	40	44	28	1/8"	20	11	20	8
50	M8×1.25	14	50	56	28	1/8"	22	12	20	8

Note: The type with magnet and the type without magnet have the same dimension.

I Knuckle

Ordering code

F–M16X150 I

- **Accessories code**
- **Screw thread**
- **Thread pitch**
- **Knuckle**
  - I: I Knuckle

Screw thread
M3: M3
M4: M4
M5: M5
M6: M6
M8: M8
M10: M10
M12: M12
M16: M16
M20: M20
M27: M27
M36: M36
M42: M42

Screw thread	Thread pitch
M3	050: 0.5mm
M4	070: 0.7mm
M5	080: 0.8mm
M6	100: 1.0mm
M8, M10, M12	125: 1.25mm
M16, M20	150: 1.5mm
M27, M36, M42	200: 2.0mm

Table for I knuckle and cylinder

Cylinder	SE							SI/SIF							
Accessory	32	40	50	63	80	100	125	32	40	50	63	80	100	125	160	200
F-M10X125I	●							●								
F-M12X125I		●							●							
F-M16X150I			●	●						●	●					
F-M20X150I					●	●						●	●			
F-M27X200I							●							●		
F-M36X200I															●	●

Cylinder	SGC			
Accessory	125	160	200	250
F-M27X200I	●			
F-M36X200I		●	●	
F-M42X200I				●

Cylinder	MI								MPG				
Accessory	8	10	12	16	20	25	32	40	6	8	10	12	16
F-M3X050I									●				
F-M4X070I	●	●								●	●		
F-M5X080I												●	●
F-M6X100I			●	●									
F-M8X125I					●								
F-M10X125I						●	●						
F-M12X125I								●					

Dimensions

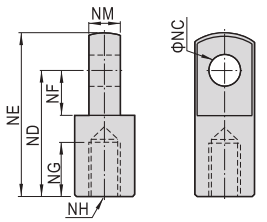

Type\Item	NC	ND	NE	NF	NG	NH	NM
F-M3x050I	3	12	15.5	5	5	M3×0.5	3
F-M4x070I	4	16	21	6.8	8	M4×0.7	4
F-M5x080I	5	25	32	14.1	7.5	M5×0.8	6.3
F-M6x100I	6	21	28	8.5	8	M6×1.0	6
F-M8x125I	8	30	40	11	15	M8×1.25	8
F-M10x125I	10	40	50	15	20	M10×1.25	10
F-M12x125I	12	48	62	24	20	M12×1.25	12
F-M16x150I	16	64	82	32	23	M16×1.5	16
F-M20x150I	20	80	102	40	30	M20×1.5	20
F-M27x200I	30	110	139	51	45	M27×2.0	30
F-M36x200I	35	144	181	65	55	M36×2.0	35
F-M42x200I	40	168	211	85	62	M42×2.0	40

Y Knuckle

Ordering code

F-M16X150 Y

- Accessories code
- Screw thread
- Thread pitch
- Knuckle: Y: Y Knuckle

Screw thread
M3: M3
M4: M4
M5: M5
M6: M6
M8: M8
M10: M10
M12: M12
M16: M16
M20: M20
M27: M27
M36: M36
M42: M42

Screw thread	Thread pitch
M3	050: 0.5mm
M4	070: 0.7mm
M5	080: 0.8mm
M6	100: 1.0mm
M8, M10, M12	125: 1.25mm
M16, M20	150: 1.5mm
M27, M36, M42	200: 2.0mm

Table for Y knuckle and cylinder

Cylinder / Accessory	SE 32	40	50	63	80	100	125	SI/SIF 32	40	50	63	80	100	125	160	200
F-M10X125Y	●							●								
F-M12X125Y		●							●							
F-M16X150Y			●	●						●	●					
F-M20X150Y					●	●						●	●			
F-M27X200Y							●							●		
F-M36X200Y															●	●

Cylinder / Accessory	SGC 125	160	200	250
F-M27X200Y	●			
F-M36X200Y		●	●	
F-M42X200Y				●

Cylinder / Accessory	MI 8	10	12	16	20	25	32	40	MPG 6	8	10	12	16
F-M3X050Y									●				
F-M4X070Y	●	●								●	●		
F-M5X080Y												●	●
F-M6X100Y			●	●									
F-M8X125Y					●								
F-M10X125Y						●	●						
F-M12X125Y								●					

Dimensions

M10 and below

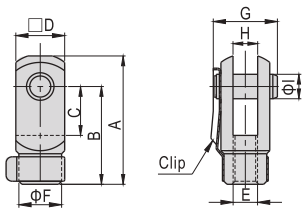

Type\Item	A	B	C	D	F
F-M3X050Y	15.5	12	5	6	6
F-M4X070Y	22	16	8	8	7
F-M5X080Y	28	21	10.2	12	10
F-M6X100Y	32	24	12	12	10
F-M8X125Y	42	32	16	16	14
F-M10X125Y	52	40	20	19	18

Type\Item	E	G	H	I
F-M3X050Y	M3×0.5	9	3	3
F-M4X070Y	M4×0.7	11.5	4	4
F-M5X080Y	M5×0.8	15.5	6.5	5
F-M6X100Y	M6×1.0	16	6	6
F-M8X125Y	M8×1.25	21	8	8
F-M10X125Y	M10×1.25	25	10	10

Others

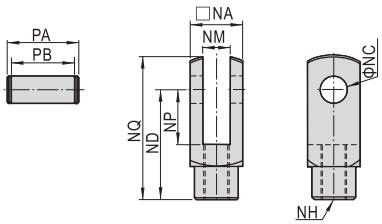

Type\Item	NA	NC	ND	NP	NQ
F-M12X125Y	25.4	12	48	24	62
F-M16X150Y	32	16	64	32	80
F-M20X150Y	44.4	20	80	40	102
F-M27X200Y	54	30	110	55	139
F-M36X200Y	70	35	144	73	179
F-M42X200Y	85	40	168	86	211

Type\Item	NM	NH	PA	PB
F-M12X125Y	12	M12×1.25	32.4	26.2
F-M16X150Y	16	M16×1.5	39	32.8
F-M20X150Y	20	M20×1.5	53.4	45.2
F-M27X200Y	30	M27×2.0	64.2	54.8
F-M36X200Y	35	M36×2.0	80.2	70.8
F-M42X200Y	40.3	M42×2.0	115	93

Ordering code

F–M10X125 F

- **Accessories code**
- **Code**: F: Floating joint
- **Screw thread**

M3: M3
M4: M4
M5: M5
M6: M6
M8: M8
M10: M10
M12: M12
M14: M14
M16: M16
M18: M18
M20: M20

- **Thread pitch**

Screw thread	Thread pitch
M3	050: 0.5mm
M4	070: 0.7mm
M5	080: 0.8mm
M6	100: 1.0mm
M8, M10, M12	125: 1.25mm
M14, M16	150: 1.5mm
M18, M20	

Table for floating joint and cylinder

Cylinder / Accessory	SE 32	40	50	63	80	100	125	SI/SIF 32	40	50	63	80	100	125	160	200
F-M10X125F	●							●								
F-M12X125F		●							●							
F-M16X150F			●	●						●	●					
F-M20X150F					●	●						●	●			

Cylinder / Accessory	ACQ 12	16	20	25	32	40	50	63	80	100
F-M8X125F			●							
F-M10X125F				●						
F-M14X150F					●	●				
F-M18X150F							●	●		

Cylinder / Accessory	PB 4	6	10	12	16	MI 8	10	12	16	20	25	32	40
F-M3X050F		●											
F-M4X070F			●			●	●						
F-M5X080F				●	●								
F-M6X100F								●	●				
F-M8X125F										●			
F-M10X125F											●	●	
F-M12X125F													●

Dimensions

M6 and below

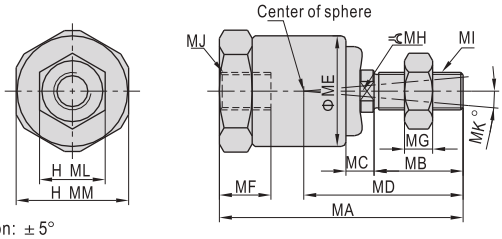

Note: Angle compensation: ±5°
Radial direction compensation: 0.5

Type\Item	MA	MB	MC	MD	ME	MF	MG	MH	MI\MJ	ML	MM
F-M3X050F	23.5	7.5	3	15	11.8	5.5	2.4	4	M3×0.5	5.5	12
F-M4X070F	26	9.5	3	17	11.8	6	3	4	M4×0.7	7	12
F-M5X080F	34.5	13.5	3.5	22.8	13.8	8	4	6	M5×0.8	8	14
F-M6X100F	34.5	13.5	3.5	22.8	13.8	8	4	6	M6×1.0	10	14

M8 and above

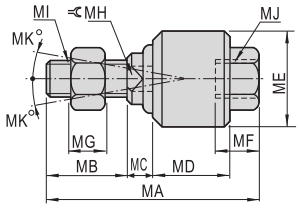

Type\Item	MA	MB	MC	MD	ME	MF	MG	MH	MI	MJ	MK
F-M8X125F	51	20	6	17	24	10.5	6	8	M8×1.25	M8×1.25	13
F-M10X125F	58	22	7	21	26	11	6	10	M10×1.25	M10×1.25	12
F-M12X125F	58	22	8	21	28	11.5	7	12	M12×1.25	M12×1.25	12
F-M14X150F	70	22.5	8.5	28	34.5	16	8	15	M14×1.5	M14×1.5	12
F-M16X150F	90	27	10	41	44.5	19	8	17	M16×1.5	M16×1.5	7
F-M18X150F	92	27	10	41	44.5	21	11	18	M18×1.5	M18×1.5	7
F-M20X150F	102	29	13	46	53	22	10	22	M20×1.5	M20×1.5	10

Universal Joint

Ordering code

F–M10X125 U

- **Accessories code**
  - **Screw thread**

M4: M4
M5: M5
M6: M6
M8: M8
M10: M10
M12: M12
M14: M14
M16: M16
M18: M18
M20: M20
M27: M27
M36: M36

  - **Thread pitch**

Screw thread	Thread pitch
M4	070: 0.7mm
M5	080: 0.8mm
M6	100: 1.0mm
M8, M10, M12	125: 1.25mm
M14, M16	150: 1.5mm
M18, M20	
M27, M36	200: 2.0mm

- **Code**: U: Universal joint

Table for universal joint and cylinder

Cylinder / Accessory	SE							SI							
	32	40	50	63	80	100	125	32	40	50	63	80	100	125	160	200
F-M10X125U	●							●								
F-M12X125U		●							●							
F-M16X150U			●	●						●	●					
F-M20X150U					●	●						●	●			
F-M27X200U							●							●		
F-M36X200U															●	●

Cylinder / Accessory	SGC			
	125	160	200	250
F-M27X200U	●			
F-M36X200U		●	●	

Cylinder / Accessory	ACQ									
	12	16	20	25	32	40	50	63	80	100
F-M5X080U	●									
F-M6X100U		●								
F-M8X125U			●							
F-M10X125U				●						
F-M14X150U					●	●				
F-M18X150U							●	●		

Cylinder / Accessory	PB					MI						
	4	6	10	12	16	8	10	12	16	20	25	32	40
F-M4X070U			●			●	●						
F-M5X080U				●	●								
F-M6X100U								●	●				
F-M8X125U										●			
F-M10X125U											●	●	
F-M12X125U													●

Dimensions

M8 and below

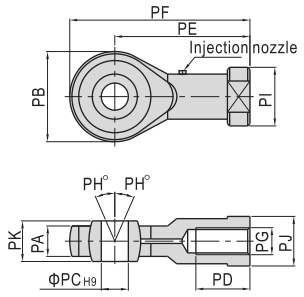

M10 and above

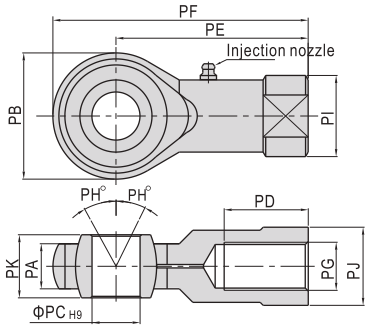

Type\Item	PA	PB	PC	PD	PE	PF	PG	PH	PI	PJ	PK
F-M4X070U	6	18	5	10	27	36	M4×0.7	13	12.5	10	8
F-M5X080U	6	18	5	10	27	36	M5×0.8	13	12.5	10	8
F-M6X100U	6.8	20	6	12	30	40	M6×1.0	13	13	11	9
F-M8X125U	9	24	8	16	36	48	M8×1.25	13	16	14	12
F-M10X125U	11	26	10	20	43	56	M10×1.25	13	19	17	14
F-M12X125U	12	32	12	22	50	66	M12×1.25	13	22	19	16
F-M14X150U	14	36	14	28	57	75	M14×1.5	13	25	22	19
F-M16X150U	15	40	16	28	64	84	M16×1.5	15	27	22	21
F-M18X150U	16.5	46	18	30	71	94	M18×1.5	15	31	27	23
F-M20X150U	18	46	20	33	77	100	M20×1.5	15	34	30	25
F-M27X200U	25	70	30	51	110	145	M27×2.0	15	50	41	37
F-M36X200U	27.5	80	35	56	125	165	M36×2.0	15	57.5	50	43

Universal Joint

How to correctly select sensor switch

A. Confirmation of specification

Load current, voltage, temperature and impact performance beyond the scope of specification in product sample are not allowed to be used to avoid poor action or damage of magnetic switch.

B. Confirmation of distance

The distance between two cylinders shall be longer than 40mm to prevent wrong action caused by magnetic interfere between two magnetic switches when the cylinders with magnet are horizontally used.

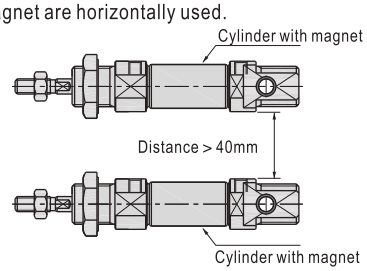

C. Confirmation of action speed of the cylinder

Magnetic switch is set in the middle position of the stroke. What shall be noticed is that maybe no drive load action exists if the speed of piston is too fast and the action duration of magnetic switch becomes shorter under the situation that load is driven by electrical signal sent by magnetic switch when piston passes through. If the speed of piston is higher than the maximum allowable speed, magnetic switch with time-extending function shall be selected.

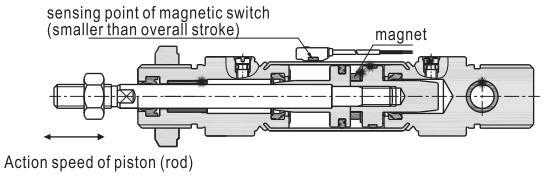

D. Confirmation of the length of wiring

◆ Magnetic switch with contact

If the wiring that ends in load is too long, the service life will be shortened when the suddenly added current is increased as the switch is supplied with power.

1) Contact protection box shall be adopted when the wiring is longer than 5m if the magnetic switch has no contact protection circuit.
2) For the switch with contact protection circuit, the suddenly added current can not be fully absorbed and the service life will be shortened if the wiring is longer than 30m. To extend its service life, it is necessary to connect to contact protection box.

◆ Magnetic switch with no contact

The wiring which has no effect on the function shall be within 100m.

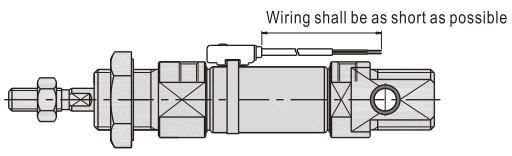

E. Confirmation of internal voltage drop of magnetic switch

◆ Magnetic switch with contact

1) Switch with indicator

When switches are connected in series, as there is internal resistance in LED, pay attention to the raising of the voltage drop (when n switches are connected in series, the voltage drop is n times of the voltage of one switch). If the switch is used under the specified voltage, all magnetic switches can work normally, but load may not act. What must be affirmed is that the load voltage shall be above the lowest operating voltage, which shall meet the following formula: internal voltage drop of power voltage switch > loaded lowest operating voltage.

2. Switches with no indicator lights can be chosen when the internal resistance in LED causes no action of the load

◆ Magnetic switch with no contact

The internal voltage drop of linear magnetic switch with no contact is generally larger than that of magnetic switch with contact. The attentions are the same with 1. In addition: DC12V relay is not used, please notice that.

Attention

F. Notice of the leaked current

◆ Magnetic switch with no contact

When all linear magnetic switches with no contact are disconnected, if the leaked current of internal circuit action passes through load, the requests are: load action current (cut current inputted into controller)> leaked current. If the request is not met, the switch will always stay in power supply situation and can not be cut off. In this situation, three-line switch shall be used. When N switches parallel, the leaked current that passes through load is n times of the leaked current of single switch.

G. Never directly use the load produced by overvoltage

◆Magnetic switch with contact

Switch with contact protection circuit or contact protection box shall be used in the situation that drive relay occurs overvoltage load

◆Magnetic switch with no contact

Though there is zener diode that is used for protection of overvoltage in the output part of magnetic switch with no contact, the repeated effect of pulse voltage may damage components. Overvoltage absorbing components shall be inserted in the situation that direct drive relay and electromagnetic valve occurs overvoltage load.

H. Situation that uses interlock circuit

Machinery type protection function is set to prevent faults. Machinery signal is turned into switch signal through sensor, which is used together with magnetic switch signal and forms dual interlock mode, whose credibility is higher. Maintenance and examination shall be carried out termly to make sure the action of interlock circuit is normal.

I. Ensure maintenance space

Wiring diagram of sensor switch

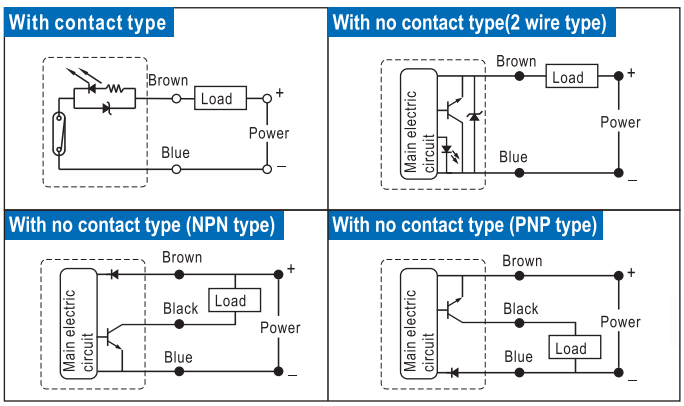

additional and adjustment of sensor switch

Attention

1. To avoid machinery damage

Switch shall not fall down or impact or bear over great impact (switch with contact shall be smaller than 300m/s^2) when it is installed. Though the noumenon of the switch is not damaged, its inside may be damaged and occur wrong action.

2. The wire of the switch shall not move with the action of cylinder

The wire is easy to break, and if the force is added to the inside of the switch, the internal components of the switch may be damaged; therefore, the wire of the switch is absolutely not allowed to move with the action of cylinder.

3. Clamping torque shall be within the allowable scope when the switch is installed

If the clamping torque is excessively high, the installed screw, accessories and switches may be damaged. If the clamping torque is insufficient, the additional position of the switch may shift.

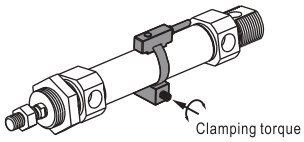

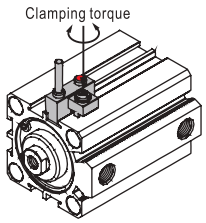

4. Switch shall be installed in the middle position of the action scope

Action scope refers to the scope of the switch connection. Adjust the additional position of the magnetic switch as the piston is stopped in the center of the action scope. If the switch is installed near the two terminals of the action scope, Which is the limit of the on-off of the switch, the action of the switch is not steady.

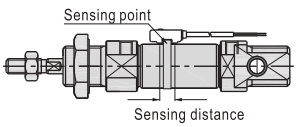

Wiring of sensor switch

Warnings

1. Wire can not bear the repeated bend force and stretching force to prevent breakage.
2. Make sure that the power is supplied after connecting the load: for two-line type switch, the current will burn the switch instantly when the power is supplied if the load is not connected.
3. No poor insulation (joint with other circuits, poor earthing and terminal connection) in wire is allowed to prevent the damage to switch caused by the current passing through the switch.
4. It is no allowed to make a wiring with a parallel power line and high voltage line or use one wiring pipe to prevent wrong action of the magnetic switch caused by interfere of control circuit.
5. Short circuit is not allowed in the load of the switch
6. Please notice that never make a wrong wiring

◆ Magnetic switch with contact

DC24V switch with indicator has polarity. Brown line or No. 1 terminal is "+", and blue line or No. 2 terminal is "-".

① Once they are connected reversely, the switch acts, but the LED will not be on. In addition, once the current above stipulated number passes, the LED will be burned and the switch can not act.

② However, the magnetic switch indicated by two colors will turn to normally opened state once it is reversely connected.

◆ Magnetic switch with no contact

For three-line switch, there is protection for circuit once the power is reversely connected (that is the “+” and “-” of the power is mutually replaced). When “+” is connected with blue line and “-” is connected with black line, the switch will be damaged.

Application environment of sensor switch

Danger

1. Magnetic switch is absolutely not allowed to be used in the atmosphere with explosive gas as it has no anti-explosion structure.
2. Magnetic switch shall not be used in the situation with magnetism, otherwise it will cause wrong action of the switch or reduce the magnetism of the magnet ring in side of the cylinder
3. Magnetic switch shall not be used in the environment that is always eroded by water. Otherwise, the sealed resin inside the switch will expand due to poor insulation, which may cause wrong action.
4. Magnetic switch shall not be used in the environment that has coolant, detergent, oil or chemicals. Please contact the company if the switch is used in the environment that has oil or chemicals or in the situation that it will be badly influenced in a short time (such as poor insulation, wrong action caused by expanded seaed resin and induration of the wire).
5. Never use in the environment that the temperature changes in circle. Or it will has bad influence on the inner part of the switch.Common temperature change is exceptional.
6. Never use in the environment with excessively great impact.

◆Magnetic switch with contact

When magnetic switch with contact meets excessively great impact (over 300m/s^2), contact will wrongly act to send an instant (under 1ms) signal or may scrap.

7. Never use in the situation that has the source of electrical pulse

◆Magnetic switch with no contact

If the equipment produces higher electrical pulse (magnetic booster, high-frequency inductive furnace and motor) near the cylinder with magnetic switch with no contact, the internal circuit components of the switch may be degraded and damaged.

8. Notice the accumulation of iron powder and denseness of the magnetic object. The accumulation of iron powder such as chip powder and welding flame or the situation with the denseness of magnetic object around the cylinder with magnetic switch will weaken the magnetism in the cylinder and magnetic switch may not act.

Maintenance and service of sensor switch

Hint

Regularly maintain and examine the following points to prevent wrong action of the switch

1. The switch shall be adjusted to the right additional position to fasten the small screw when the installed small screw for tightening the switch is loose or the additional position shifts.
2. To examine whether the wire has damage. The damage to wire will cause poor insulation. If there is damage, the switch shall be changed or the wire shall be repaired.
3. To examine whether the green light in the switch indicated by two colors is on when the piston stops at the set position. If the red light is on in this position, which means that the position is not right and shall be rectified to make the switch shine in the set position.

Connection method

A. 2 wire reed switch type connection

1. General connection：
When connecting 2 wire switches, load must be connected in series with the sensor to prevent damaged.
Connect the brown wire in series load with positive (+) and the blue wire to negative(-) of DC power source, otherwise the LED will not light.

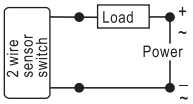

2. Series connection(And)
When 2 wire switches in series(AND) use,the voltage drop will be added up.(Typical V drop about 2.5V per switch)
When series too many switches, excessive voltage drop will cause non-operation of the load.
The quantity of switches in series due to the voltage of power source.

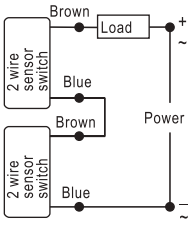

3. Parallel connection(OR)
When 2 wire switches in parallel(OR) use, the current flow to the switch will be shared when switches all in active.
When connection too many switches in parallel use, possible concurrent operation will caues dim or off LED due to lower current distribution.
The quantity of switches in parallel due to the current of load.

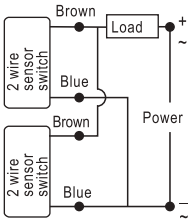

B. 3 wire solid state NPN type connection

1. General connection
When connecting 3 wire switches, it must connect to DC Power source. pay attention to the wiring of black wire. wrong connect will damage the switch.
Connect brown wire to the positive(+) and the blue to the negative(-). the black wire must series load and to positive(+) only.

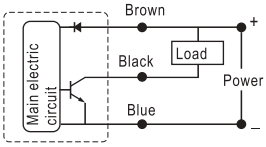

2. Series connection(And)
When 3 wire solid switches in series (AND) use. Voltage drop will be added up. (Typical V drop about 1.5V per switch)
When series too many switches, excessive voltage drop will cause non-operation of the load.
The quantity of switches in series due to the voltage of power source.

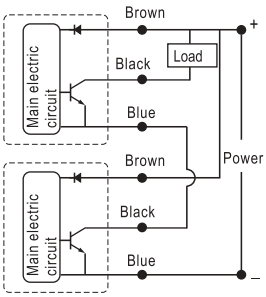

3. Parallel connection(OR)
When 3 wire solid state switches in parallel (OR) use. Leakage current will be added up.
When parallel too many switches in use, possibly cause wrong operation due to lower load current.
The quantity of switches in parallel due to the current of load.

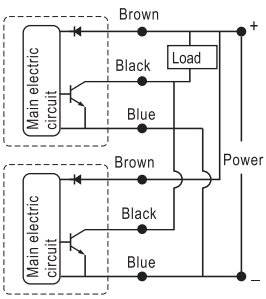

C. 3 wire solid state PNP type connection

1. General connection
When connecting 3 wire switches, it must connect to DC power source. pay attention to the wiring of black wire. Wrong connect will damage the switch.
Connect brown wire to the positive(+) and the blue to the negative(-). The black wire must series load and to negative(-) only.

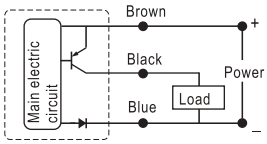

2. Series connection(And)
When 3 wire solid state switches inseries(AND) use. Voltage drop will be added up. (Typical V drop about 1.5V per switch)
When series too many switches, excessive voltage drop will cause non-operation of the load.
The quantity of switches in series due to the voltage of power source.

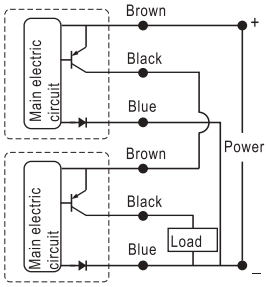

3. Parallel connection(OR)
When 3 wire solid state switches inparallel (OR) use. Leakage current will be added up.
When parallel too many switches in use, possibly cause wrong operation due to lower load current.
The quantity of switches in parallel due to the current of load.

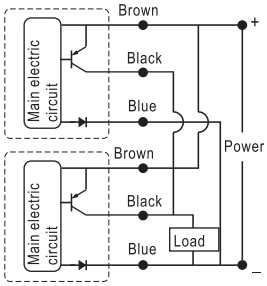

The selection of sensor switch

Sensor switch\Cylinder series		SI/SIF									SGC				MI								PB/PBR					TWG		
Type	Photo	32	40	50	63	80	100	125	160	200	125	160	200	250	8	10	12	16	20	25	32	40	6	8	10	12	16	32	40	50
DS1-B1/CS1-B1	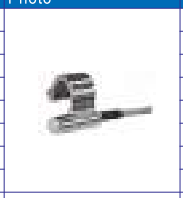	●	●								●																			
DS1-B2/CS1-B2				●	●																									
DS1-B3/CS1-B3						●																								
DS1-B4/CS1-B4							●																							
DS1-B5/CS1-B5								●						●																
DS1-B6/CS1-B6									●																					
DS1-B7/CS1-B7										●																				
DS1-B8/CS1-B8												●	●																	
DS1-F CS1-F		●	●	●	●	●	●	●	●	●					●	●	●	●	●	●	●	●								
DS1-U CS1-U		●	●	●	●	●	●								●	●	●	●	●	●	●	●								
DS1-M CS1-M															●	●	●	●	●	●	●	●	●	●	●	●	●			
DS1-T CS1-T																												●	●	●

Sensor switch\Cylinder series		ACQ/TACQ														TWQ					TCL/TCM											RMT				
Type	Photo	12	16	20	25	32	40	50	63	80	100	125	140	160	20	25	32	40	50	6	10	12	16	20	25	32	40	50	63	80	100	16	20	25	32	40
DS1-G CS1-G		●	●	●	●	●	●	●	●	●	●	●	●	●	●	●	●	●	●			●	●	●	●	●	●	●	●	●	●	●	●	●	●	●
DS1-J CS1-J						●	●	●	●	●	●						●	●	●																	
DS1-H												●	●	●						●	●															

Sensor switch\Cylinder series		TWH/TWM							MD/MK						TR						STW					QCK							
Type	Photo	20	25	32	40	50	63	80	6	12	16	20	25	32	6	10	16	20	25	32	10	16	20	25	32	12	16	20	25	32	40	50	63
DS1-J CS1-J		●	●	●	●	●	●	●																						●	●	●	●
DS1-G CS1-G		●	●	●	●	●	●	●	●	●	●	●	●	●	●	●	●	●	●	●	●	●	●	●	●	●	●	●	●	●	●	●	●	●

Sensor switch\Cylinder series		HFZ							HFY						HFP					HFR					HFC							
Type	Photo	6	10	16	20	25	32	40	6	10	16	20	25	32	10	16	20	25	32	10	16	20	25	32	10	16	20	25	32	40	50	63
DS1-G CS1-G			●	●	●	●	●	●		●	●	●	●	●		●	●	●	●														
DS1-H		●		●	●	●	●	●	●											●	●	●	●	●	●	●	●	●	●	●	●	●	●

Sensor switch\Cylinder series		SE							ACE									HLQ、HLS					MU			HLH				MPG				HRQ
Type	Photo	32	40	50	63	80	100	125	12	16	20	25	32	40	50	63	80	100	6	8	12	16	20	25	6	8	10	6	10	16	20	6	8	10	12	16	
DS1-E CS1-E		●	●	●	●	●	●	●	●	●	●	●	●	●	●	●	●	●																		
DS1-H																			●	●	●	●	●	●	●	●	●	●	●	●	●	●	●	●	●	●	●

Note: DS1－□□ is solid state output type and only adapt to DC 5~30V;CS1－□□ is reed switch type .

Sensor switch

Specification

Item\Type	DS1-B□	DS1-B□N	DS1-B□P
Switch logic	Transistor without contact, Normally opened type		
Switch type	Two lines type	NPN type	PNP type
Operating voltage(V)	10~28V DC	5~30V DC	
Max. Switching current(mA)	50	200	
Switching rating(W)	Max. 1.4	Max. 6	
Current consumption	12(40)uA Max. @24V	15mA Max. @24V	
Voltage drop	2.65V Max. @50mA DC	0.5V Max. @200mA DC	
Cable	Φ4.0,2C Black oil resistant PVC	Φ4.0,3C Black oil resistant PVC	
Indicator	Red LED		
Leakage current	20(90)uA Max. @28V	0.01mA Max.	
Sensitivity(Gauss)	25~700	60~75	
Max. Frequency(Hz)	1000		
Shock(m/s^2)	500		
Vibration(m/s^2)	90		
Temperature range(℃)	-10~70		
Enclosure classification	IP67(NEMA6)		
Protection circuit	Power reverse polarity, surge suppression, output short circuit		

Dimensions

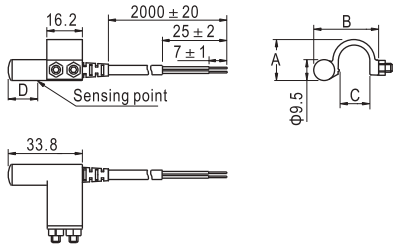

Type\Item	A	B	C	D
DS1-B1□	16.2	27.6	11	15.5
DS1-B2□	18.2	29.7	14	15.7
DS1-B3□	21.9	31.7	16.6	15.5
DS1-B4□	25.8	34.7	18	15.5
DS1-B5□	31.7	37.5	19	13
DS1-B6□	39.4	44.5	26	13
DS1-B7□	46.4	44.5	26	13
DS1-B8□	25	38.6	15	15.5

Ordering code

DS1 B1 N 020

Number of sensor switch
DS1: Sensor switch

Specification of sensor switch

Specification	Product Series
B1: B1 type	Use for SI32(40), SGC125
B2: B2 type	Use for SI50(63)
B3: B3type	Use for SI80
B4: B4 type	Use for SI100
B5: B5 type	Use for SI125, SGC250
B6: B6 type	Use for SI160
B7: B7 type	Use for SI200
B8: B8 type	Use for SGC160(200)

Connecting way ①

C08: M8 quick joint, length of wire is 150mm
C12: M12 quick joint, length of wire is 150mm
020: length of wire is 2m
030: length of wire is 3m
050: length of wire is 5m
100: length of wire is10m

Model of sensor switch

Blank: two-line /normally opened
N: three-line NPN with no contact (current flows in)/ normally opened
P: three-line PNP with no contact (current flows out)/ normally opened

① Note: The quick joint that is attached at the end of wire is three-needle-male joint-linear-rotary screw thread type. The female joint plug has to be ordered additionally. Please refer to P402 for the specific data.

Mounting

Installation example	Installation method
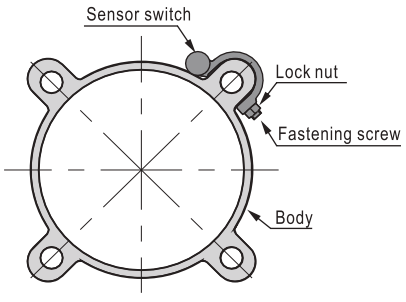	No additional accessories are necessary for the sensor switch of DS1-B (N, P) series. It can be directly fixed onto the cylinder, which is convenient and fast. 1. Loosen the clamping screw, snap the sensor switch on the outer surface of the cylinder, and adjust it to the proper position. Tighten the clamping screw and then tighten the anti-loose screw cap to fix.
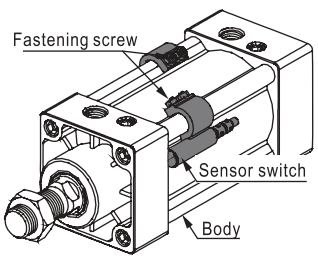	

Specification

Item\Type	DS1-J	DS1-JN	DS1-JP
Switch logic	Transistor without contact, Normally opened type		
Switch type	Two lines type	NPN type	PNP type
Operating voltage(V)	10~28V DC	5~30V DC	
Max. Switching current(mA)	50	200	
Switching rating(W)	Max. 1.4	Max. 6	
Current consumption	12(40)uA Max. @24V	15mA Max. @24V	
Voltage drop	2.65V Max. @50mA DC	0.5V Max. @200mA DC	
Cable	Φ3.3,2C Black oil resistant PVC	Φ3.3,3C Black oil resistant PVC	
Indicator	Red LED		
Leakage current	20(90)uA Max. @28V	0.01mA Max.	
Sensitivity(Gauss)	25~700	60~75	
Max. Frequency(Hz)	1000		
Shock(m/s^2)	500		
Vibration(m/s^2)	90		
Temperature range(℃)	-10~70		
Enclosure classification	IP67(NEMA6)		
Protection circuit	Power reverse polarity, surge suppression		

Dimensions

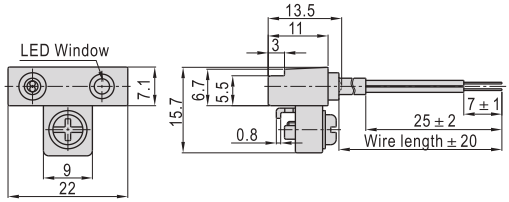

Ordering code

DS1 J N 020

Number of sensor switch
DS1: Sensor switch

Specification of sensor switch

Specification	Product Series
J: J type	TWH, TWM, ACQ32~100 TWQ32~50, QCK32~63

Connecting way ①

C08: M8 quick joint, length of wire is 150mm
C12: M12 quick joint, length of wire is 150mm
020: length of wire is 2m
030: length of wire is 3m
050: length of wire is 5m
100: length of wire is10m

Model of sensor switch

Blank: two-line /normally opened
N: three-line NPN with no contact (current flows in)/ normally opened
P: three-line PNP with no contact (current flows out)/ normally opened

① Note: The quick joint that is attached at the end of wire is three-needle-male joint-linear-rotary screw thread type. The female joint plug has to be ordered additionally. Please refer to P402 for the specific data.

Mounting

Installation example	Installation method
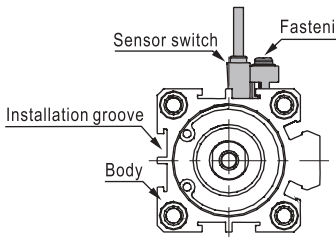	No additional accessories are necessary for the sensor switch of DS1-J (N, P)series. It can be directly fixed onto the cylinder, which is convenient and fast. 1. Loosen the clamping screw, slide the inductive switch to the slot and adjust it to the proper position. Tighten the clamping screw and then tighten the anti-loose screw cap to fix.
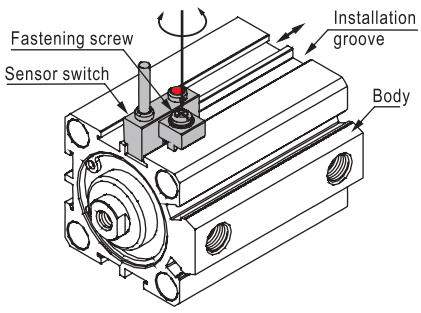	

Dimensions

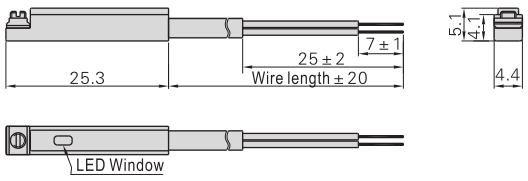

Specification

Item\Type	DS1-G	DS1-GN	DS1-GP
Switch logic	Transistor without contact, Normally opened type		
Switch type	Two lines type	NPN type	PNP type
Operating voltage(V)	10~28V DC	5~30V DC	
Max. Switching current(mA)	50	200	
Switching rating(W)	Max. 1.4	Max. 6	
Current consumption	12(40)uA Max. @24V	15mA Max. @24V	
Voltage drop	2.65V Max. @50mA DC	0.5V Max. @200mA DC	
Cable	Φ2.8,2C Black oil resistant PVC	Φ3.3,3C Black oil resistant PVC	
Indicator	Red LED		
Leakage current	20(90)uA Max. @28V	0.01mA Max.	
Sensitivity(Gauss)	25~700	60~75	
Max. Frequency(Hz)	1000		
Shock(m/s^2)	500		
Vibration(m/s^2)	90		
Temperature range(℃)	-10~70		
Enclosure classification	IP67(NEMA6)		
Protection circuit	Power reverse polarity, surge suppression		

Ordering code

DS1 G N 020

Number of sensor switch
DS1: Sensor switch

Specification of sensor switch

Specification	Product Series
G: G type	MD, MK, TR, TC, ACQ, STW TWH, TWM, TWQ QCK, HFZ10~40, HFY10~32 HFP10~32, RMT

Connecting way ①

C08: M8 quick joint, length of wire is 150mm
C12: M12 quick joint, length of wire is 150mm
020: length of wire is 2m
030: length of wire is 3m
050: length of wire is 5m
100: length of wire is10m

Model of sensor switch

Blank: two-line /normally opened
N: three-line NPN with no contact (current flows in)/ normally opened
P: three-line PNP with no contact (current flows out)/ normally opened

① Note: The quick joint that is attached at the end of wire is three-needle-male joint-linear-rotary screw thread type. The female joint plug has to be ordered additionally. Please refer to P402 for the specific data.

Mounting

Installation example	Installation method
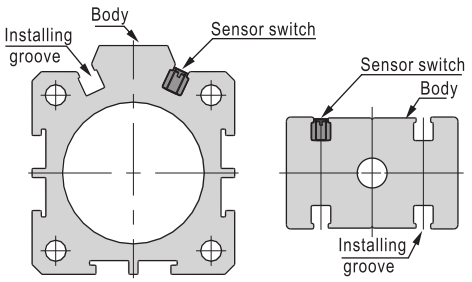	No additional accessories are necessary for the sensor switch of DS1-G (N, P) series.It can be directly fixed onto the groove alone the cylinder, which is convenient and fast. 1. Loosen the clamping screw on sensor switch, lead the sensor switch to the additional slot and adjust it to the proper position. Tighten the clamping screw to fix.
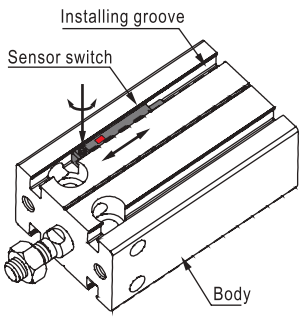	

Sensor switch

Specification

Item\Type	DS1-E	DS1-EN	DS1-EP
Switch logic	Transistor without contact, Normally opened type		
Switch type	Two lines type	NPN type	PNP type
Operating voltage(V)	10~28V DC	5~30V DC	
Max. Switching current(mA)	50	200	
Switching rating(W)	Max. 1.4	Max. 6	
Current consumption	12(40)uA Max. @24V	15mA Max. @24V	
Voltage drop	2.65V Max. @50mA DC	0.5V Max. @200mA DC	
Cable	Φ2.8,2C Black oil resistant PVC	Φ3.3,3C Black oil resistant PVC	
Indicator	Red LED		
Leakage current	20(90)uA Max. @28V	0.01mA Max.	
Sensitivity(Gauss)	25~700	45~55	
Max. Frequency(Hz)	1000		
Shock(m/s^2)	500		
Vibration(m/s^2)	90		
Temperature range(℃)	-10~70		
Enclosure classification	IP67(NEMA6)		
Protection circuit	Power reverse polarity, surge suppression		

Dimensions

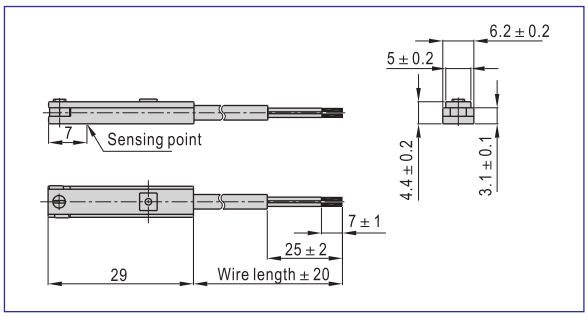

Ordering code

DS1 E N 020

Number of sensor switch
DS1: Sensor switch

Specification of sensor switch

Specification	Product Series
E: E type	Use for SE,ACE series

Connecting way ①

C08: M8 quick joint, length of wire is 150mm
C12: M12 quick joint, length of wire is 150mm
020: length of wire is 2m
030: length of wire is 3m
050: length of wire is 5m
100: length of wire is10m

Model of sensor switch

Blank: two-line /normally opened
N: three-line NPN with no contact (current flows in)/ normally opened
P: three-line PNP with no contact (current flows out)/ normally opened

① Note: The quick joint that is attached at the end of wire is three-needle-male joint-linear-rotary screw thread type. The female joint plug has to be ordered additionally. Please refer to P402 for the specific data.

Mounting

Installation example	Installation method
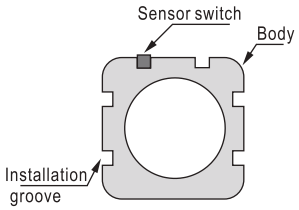	No additional accessories are necessary for the sensor switch of DS1-E (N, P)series. It can be directly fixed onto the groove of the cylinder, which is convenient and fast. 1. Adjust the clamping screw on sensor switch . Then slide the sensor switch to the additional slot and adjust it to the proper position and tighten the clamping screw to fix.
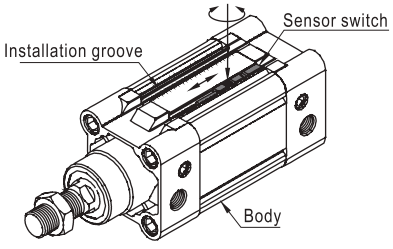	

Sensor switch

Specification

Item\Type	DS1-F	DS1-FN	DS1-FP
Switch logic	Transistor without contact, Normally opened type		
Switch type	Two lines type	NPN type	PNP type
Operating voltage(V)	10~28V DC	5~30V DC	
Max. Switching current(mA)	50	200	
Switching rating(W)	Max. 1.4	Max. 6	
Current consumption	12(40)uA Max. @24V	15mA Max. @24V	17mA Max. @24V
Voltage drop	2.65V Max. @50mA DC	1.0V Max. @200mA DC	
Cable	Φ4.0,2C Black oil resistant PVC	Φ4.0,3C Black oil resistant PVC	
Indicator	Red LED		
Leakage current	20(90)uA Max. @28V	0.01mA Max.	
Sensitivity(Gauss)	25~700	60~75	
Max. Frequency(Hz)	1000		
Shock(m/s^2)	500		
Vibration(m/s^2)	90		
Temperature range(℃)	-10~70		
Enclosure classification	IP67(NEMA6)		
Protection circuit	Power reverse polarity, surge suppression		

Dimensions

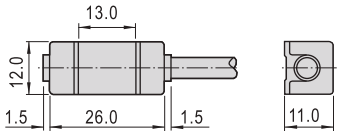

The ordering code of mounting accessories

Bore size\Series	SC,SCL	SU,SUL	SI,SIL	JSI
32	F-SC32H	F-SU32H	F-SI32H	F-SI32H
40	F-SC32H	F-SU40H	F-SI40H	F-SI40H
50	F-SC32H	F-SU50H	F-SI50H	F-SI50H
63	F-SC63H	F-SU63H	F-SI63H	F-SI63H
80	F-SC80H	F-SU80H	F-SI80H	F-SI80H
100	F-SC80H	F-SU100H	F-SI100H	F-SI100H
125	-	-	F-SI125H	F-SI125H
160	-	-	F-SI160H	-
200	-	-	F-SI200H	-

Ordering code

DS1 F N 020

Number of sensor switch
DS1: Sensor switch

Specification of sensor switch

Specification	Product Series
F: F type	SI, MI

Connecting way ①

C08: M8 quick joint, length of wire is 150mm
C12: M12 quick joint, length of wire is 150mm
020: length of wire is 2m
030: length of wire is 3m
050: length of wire is 5m
100: length of wire is10m

Model of sensor switch

Blank: two-line /normally opened
N: three-line NPN with no contact (current flows in)/ normally opened
P: three-line PNP with no contact (current flows out)/ normally opened

① Note: The quick joint that is attached at the end of wire is three-needle-male joint-linear-rotary screw thread type. The female joint plug has to be ordered additionally. Please refer to P402 for the specific data.

Mounting

Installation example	Installation method
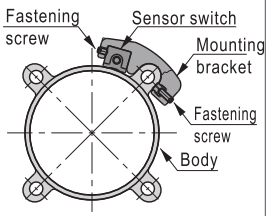 Outline 1: Used with SU, SI, JSI series	When the DS1–F, DS1–FN, DS1–FP series sensor switch used with different cylinders, different mounting accessories must be ordered. the details are below. 1. When it used with MI, MA50, 63 series cylinders, you must order the band unit(the ordering code is GXPAB–01), then depend on the below outline 3, fixed the sensor switch on the proper position of the cylinder's body with the band unit. 2. When it used with SC series cylinders, you must order the Mounting bracket (the ordering code is below table) , then depend on the below outline 2, fixed the sensor switch on the proper position of the cylinder's body with the mounting bracket. 3. When it used with SU, SI, JSI cylinders, you must order the mounting bracket(the ordering code is below table), then depend on the below outline 1, fixed the sensor switch on the proper position of the cylinder's body with the mounting bracket.
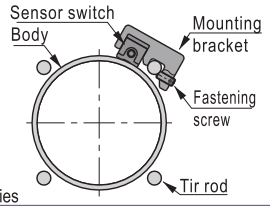 Outline 2: Used with SC series	
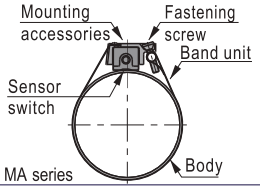 Outline 3: Used with MI, MA series	

Specification

Item\Type	DS1-U	DS1-UN	DS1-UP
Switch logic	Transistor without contact, Normally opened type		
Switch type	Two lines type	NPN type	PNP type
Operating voltage(V)	10~28V DC	5~30V DC	
Max. Switching current(mA)	50	200	
Switching rating(W)	Max. 1.4	Max. 6	
Current consumption	12(40)uA Max. @24V	15mA Max. @24V	17mA Max. @24V
Voltage drop	2.65V Max. @50mA DC	1.0V Max. @200mA DC	
Cable	Φ4.0,2C Black oil resistant PVC	Φ4.0,3C Black oil resistant PVC	
Indicator	Red LED		
Leakage current	20(90)uA Max. @28V	0.01mA Max.	
Sensitivity(Gauss)	25~700	60~75	
Max. Frequency(Hz)	1000		
Shock(m/s^2)	500		
Vibration(m/s^2)	90		
Temperature range(℃)	-10~70		
Enclosure classification	IP67(NEMA6)		
Protection circuit	Power reverse polarity, surge suppression		

Dimensions

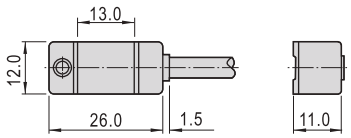

The ordering code of mounting accessories

Bore size\Series	SC,SCL	SU,SUL	SI,SIL	JSI
32	F-SC32H	F-SU32H	F-SI32H	F-SI32H
40	F-SC32H	F-SU40H	F-SI40H	F-SI40H
50	F-SC32H	F-SU50H	F-SI50H	F-SI50H
63	F-SC63H	F-SU63H	F-SI63H	F-SI63H
80	F-SC80H	F-SU80H	F-SI80H	F-SI80H
100	F-SC80H	F-SU100H	F-SI100H	F-SI100H
125	-	-	F-SI125H	F-SI125H
160	-	-	F-SI160H	-
200	-	-	F-SI200H	-

Ordering code

DS1 U N 020

Number of sensor switch
DS1: Sensor switch

Specification of sensor switch

Specification	Product Series
U: U type	SI, MI,

Connecting way ①

C08: M8 quick joint, length of wire is 150mm
C12: M12 quick joint, length of wire is 150mm
020: length of wire is 2m
030: length of wire is 3m
050: length of wire is 5m
100: length of wire is10m

Model of sensor switch

Blank: two-line /normally opened
N: three-line NPN with no contact (current flows in)/ normally opened
P: three-line PNP with no contact (current flows out)/ normally opened

① Note: The quick joint that is attached at the end of wire is three-needle-male joint-linear-rotary screw thread type. The female joint plug has to be ordered additionally. Please refer to P402 for the specific data.

Mounting

Installation example	Installation method
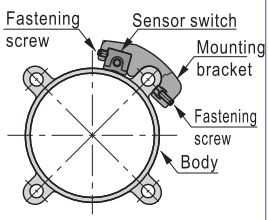 Outline 1: Used with SU, SI, JSI series	When the DS1–U, DS1–UN, DS1–UP series sensor switch used with different cylinders, different mounting accessories must be ordered. the details are below. 1. When it used with MI, MA50, 63 series cylinders, you must order the band unit(the ordering code is GXPAB–01), then depend on the below outline 3, fixed the sensor switch on the proper position of the cylinder's body with the band unit. 2. When it used with SC series cylinders, you must order the Mounting bracket (the ordering code is below table) , then depend on the below outline 2, fixed the sensor switch on the proper position of the cylinder's body with the mounting bracket. 3. When it used with SU, SI, JSI cylinders, you must order the mounting bracket(the ordering code is below table), then depend on the below outline 1, fixed the sensor switch on the proper position of the cylinder's body with the mounting bracket.
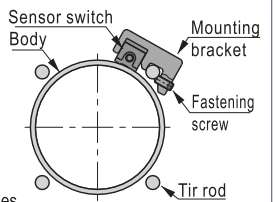 Outline 2: Used with SC series	
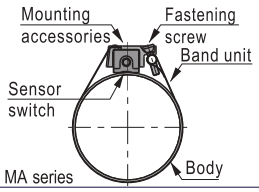 Outline 3: Used with MI, MA series	

Specification

Item\Type	DS1-H, DS1-HL	DS1-HN, DS1-HLN	DS1-HP, DS1-HLP
Switch logic	Transistor without contact, Normally opened type		
Switch type	Two lines type	NPN type	PNP type
Operating voltage(V)	10~28V DC	5~30V DC	
Max. Switching current(mA)	50	200	
Switching rating(W)	Max. 1.4	Max. 6	
Current consumption	12(40)uA Max. @24V	15mA Max. @24V	
Voltage drop	2.65V Max. @50mA DC	0.5V Max. @200mA DC	
Cable	Φ2.8,2C Black oil resistant PVC	Φ3.3,3C Black oil resistant PVC	
Indicator	Red LED		
Leakage current	20(90)uA Max. @28V	0.01mA Max.	
Sensitivity(Gauss)	25~700	60~75	
Max. Frequency(Hz)	1000		
Shock(m/s^2)	500		
Vibration(m/s^2)	90		
Temperature range(℃)	-10~70		
Enclosure classification	IP67(NEMA6)		
Protection circuit	Power reverse polarity, surge suppression		

Dimensions

DS1-H

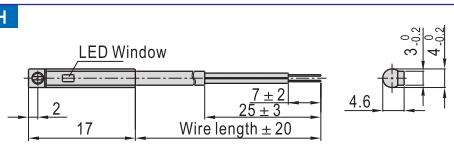

DS1-HL

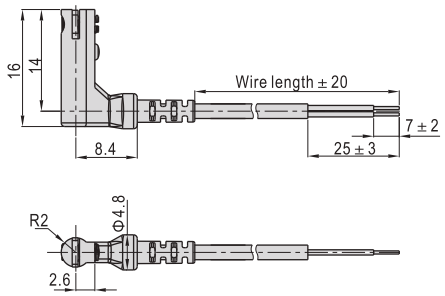

Ordering code

DS1 H N 020

Number of sensor switch
DS1: Sensor switch

Specification of sensor switch

Specification	Product Series
H: H type	HLH, HRQ, HFZ6(16~40), HFY6
HL: HL type	HFR10~25, HLQ/HLS, HFC

Connecting way ①

C08: M8 quick joint, length of wire is 150mm
C12: M12 quick joint, length of wire is 150mm
020: length of wire is 2m
030: length of wire is 3m
050: length of wire is 5m
100: length of wire is10m

Model of sensor switch

Blank: two-line /normally opened
N: three-line NPN with no contact (current flows in)/ normally opened
P: three-line PNP with no contact (current flows out)/ normally opened

① Note: The quick joint that is attached at the end of wire is three-needle-male joint-linear-rotary screw thread type. The female joint plug has to be ordered additionally. Please refer to P402 for the specific data.

Mounting

Installation example	Installation method
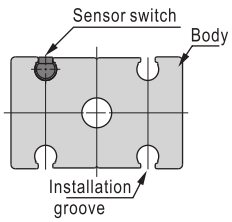	No additional accessories are necessary for the sensor switch of DS1-H (N, P)\DS1-HL(N,P) series. It can be directly fixed along the groove of the cylinder, which is convenient and fast. 1. Adjust the clamping screw on sensor switch, slide the sensor switch into the installation slot and adjust it to the proper position and tighten the clamping screw to fix.
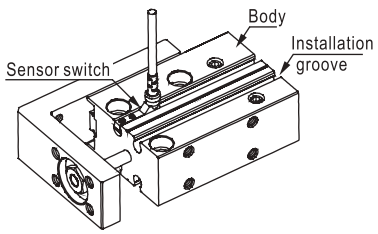	

Dimensions

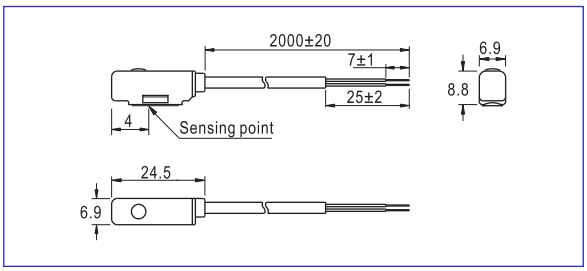

Specification

Item\Type		DS1-M	DS1-MN	DS1-MP
Switch logic		Transistor without contact, Normally opened type		
Switch type		Two lines type	NPN type	PNP type
Operating voltage(V)		10~28V DC	5~30V DC	
Max. Switching current(mA)		50	200	
Switching rating(W)		Max. 1.4	Max. 6	
Current consumption		12(40)uA Max. @24V	15mA Max. @24V	
Voltage drop		2.65V Max. @50mA DC	0.5V Max. @200mA DC	
Cable		Φ3.3,2C Black oil resistant PVC	Φ3.3,3C Black oil resistant PVC	
Indicator		Red LED		
Leakage current		20(90)uA Max. @28V	0.01mA Max.	
Sensitivity (Gauss)	S06~S10	25~700	45~55	
	S12~S16	25~700	55~65	
	S20~S63	25~700	65~75	
	A20~A40	25~700	65~75	
Max. Frequency(Hz)		1000		
Shock(m/s^2)		500		
Vibration(m/s^2)		90		
Temperature range(℃)		-10~70		
Enclosure classification		IP67(NEMA6)		
Protection circuit		Power reverse polarity, surge suppression		

Ordering code

DS1 M N 020 S 06

Number of sensor switch

DS1: Sensor switch

Specification of sensor switch

Specification	Product Series
M: M type	PB, M

Model of sensor switch

Blank: two-line /normally opened
N: three-line NPN with no contact (current flows in)/ normally opened
P: three-line PNP with no contact (current flows out)/ normally opened

① **Connecting way**

C08: M8 quick joint, length of wire is 150mm
C12: M12 quick joint, length of wire is 150mm
020: length of wire is 2m
030: length of wire is 3m
050: length of wire is 5m
100: length of wire is10m

Bore size

Cylinder barrel material	Bore size
Aluminum alloy	20: Φ20mm
	25: Φ25mm
	32: Φ32mm
	40: Φ40mm
Stainless steel	06: Φ6mm
	08: Φ8mm
	10: Φ10mm
	12: Φ12mm
	16: Φ16mm
	20: Φ20mm
	25: Φ25mm
	32: Φ32mm
	40: Φ40mm
	50: Φ50mm
	63: Φ63mm

Cylinder Barrel material

S: Stainless steel
A: Aluminum alloy

① Note: The quick joint that is attached at the end of wire is three-needle-male joint-linear-rotary screw thread type. The female joint plug has to be ordered additionally. Please refer to P402 for the specific data.

Mounting

Installation example	Installation method
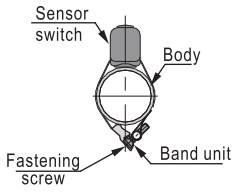	No additional accessories are necessary for the sensor switch of DS1-M, DS1-MN, DS1-MP series. It can be directly fixed onto the cylinder, which is convenient and fast. 1. Strap band round the cylinder barrel. Snap the clamping screw into button orifice and adjust it to the proper position. Properly tighten the clamping screw to fix.

Specification

Item\Type	DS1-T	DS1-TN	DS1-TP
Switch logic	Transistor without contact, Normally opened type		
Switch type	Two lines type	NPN type	PNP type
Operating voltage(V)	10~28V DC	5~30V DC	
Max. Switching current(mA)	50	200	
Switching rating(W)	Max. 1.4	Max. 6	
Current consumption	12(40)uA Max. @24V	15mA Max. @24V	
Voltage drop	2.65V Max. @50mA DC	0.5V Max. @200mA DC	
Cable	Φ3.3,2C Black oil resistant PVC	Φ3.3,3C Black oil resistant PVC	
Indicator	Red LED		
Leakage current	20(90)uA Max. @28V	0.01mA Max.	
Sensitivity(Gauss)	25~700	55~65	
Max. Frequency(Hz)	1000		
Shock(m/s^2)	500		
Vibration(m/s^2)	90		
Temperature range(℃)	-10~70		
Enclosure classification	IP67(NEMA6)		
Protection circuit	Power reverse polarity, surge suppression		

Dimensions

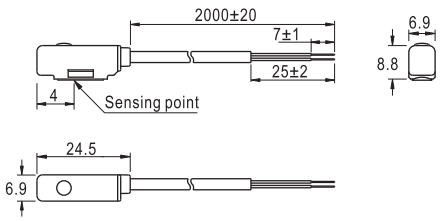

Ordering code

DS1 T N 020 A 32

Number of sensor switch
DS1: Sensor switch

Specification of sensor switch

Specification	Product Series
T: T type	TWG

Model of sensor switch
- Blank: two-line /normally opened
- N: three-line NPN with no contact (current flows in)/ normally opened
- P: three-line PNP with no contact (current flows out)/ normally opened

Bore size
- 32: Φ32mm
- 40: Φ40mm
- 50: Φ50mm

Cylinder Barrel material
A: Aluminum alloy

Connecting way ①
- C08: M8 quick joint, length of wire is 150mm
- C12: M12 quick joint, length of wire is 150mm
- 020: length of wire is 2m
- 030: length of wire is 3m
- 050: length of wire is 5m
- 100: length of wire is10m

① Note: The quick joint that is attached at the end of wire is three-needle-male joint-linear-rotary screw thread type. The female joint plug has to be ordered additionally. Please refer to P402 for the specific data.

Mounting

Installation example	Installation method
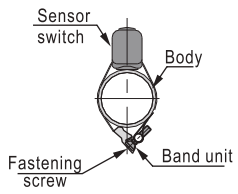	No additional accessories are necessary for the sensor switch of DS1-T. DS1-TN, DS1-TP series. It can be directly fixed onto the cylinder, which is convenient and fast. 1. Strap band round the cylinder barrel. Snap the clamping screw into button orifice and adjust it to the proper position. Properly tighten the clamping screw to fix.

Specification

Item\Type	CS1-B□	CS1-B□X
Switch logic	STSP Normally opened type	
Switch type	Reed switch with contact	
Operating voltage(V)	5~240V AC/DC	
Max. Switching current(mA)	100	
Switching rating(W)	Max. 10	
Current consumption	No	
Voltage drop	2.5V Max. @100mA DC	
Cable	Φ4.0,2C Gray oil resistant PVC (Flame retarded)	
Indicator	Red LED	No
Leakage current	No	
Sensitivity(Gauss)	60~75	
Max. Frequency(Hz)	200	
Shock(m/s^2)	300	
Vibration(m/s^2)	90	
Temperature range(℃) ①	-10~70	
Enclosure classification	IP67(NEMA6)	
Protection circuit	No	

①Note: Please contact us for high remperature resistant(125℃),low remperature resistant(−40~−25℃) and explosion-proof sensor switch.

Dimensions

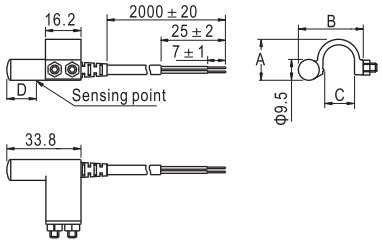

Type\Item	A	B	C	D
CS1−B1□	16.2	27.6	11	15.5
CS1−B2□	18.2	29.7	14	15.7
CS1−B3□	21.9	31.7	16.6	15.5
CS1−B4□	25.8	34.7	18	15.5
CS1−B5□	31.7	37.5	19	13
CS1−B6□	39.4	44.5	26	13
CS1−B7□	46.4	44.5	26	13
CS1−B8□	25	38.6	15	15.5

Ordering code

CS1 B1 X 020

Number of sensor switch
CS1: Sensor switch

Specification of sensor switch

Specification	Product Series
B1: B1 type	Use for SI32(40), SGC125
B2: B2 type	Use for SI50(63)
B3: B3type	Use for SI80,
B4: B4 type	Use for SI100
B5: B5 type	Use for SI125, SGC250
B6: B6 type	Use for SI160
B7: B7 type	Use for SI200
B8: B8 type	Use for SGC160(200)

Connecting way ①

C08: M8 quick joint, length of wire is 150mm
C12: M12 quick joint, length of wire is 150mm
020: length of wire is 2m
030: length of wire is 3m
050: length of wire is 5m
100: length of wire is10m

Model of sensor switch

Blank: two-line magnetic spring pipe with contact/normally opened
X: two-line magnetic spring pipe with contact, without indicator light/normally opened

① Note: The quick joint that is attached at the end of wire is three-needle-male joint-linear-rotary screw thread type. The female joint plug has to be ordered additionally. Please refer to P402for the specific data.

Mounting

Installation example	Installation method
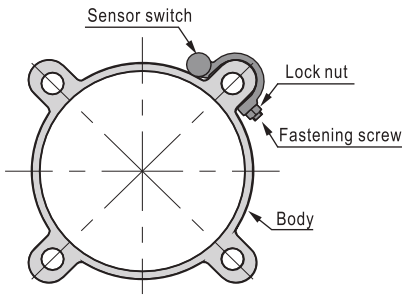	No additional accessories are necessary for the sensor switch of CS1-B□, CS1-B□Xseries. It can be directly fixed onto the cylinder, which is convenient and fast. 1. Loosen the clamping screw, snap the sensor switch on the outer surface of the cylinder, and adjust it to the proper position. Tighten the clamping screw and then tighten the lock nut to fix.
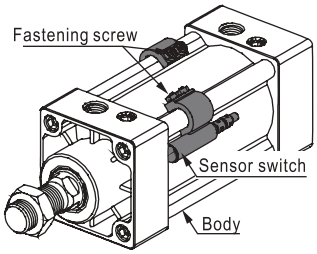	

Dimensions

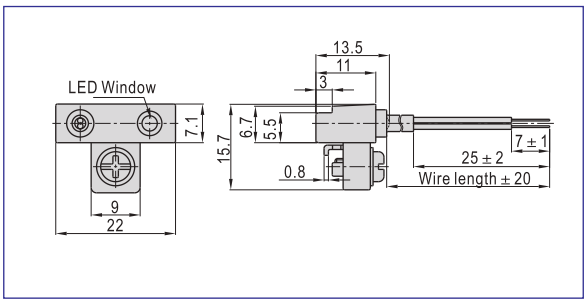

Specification

Item\Type	CS1-J	CS1-JX
Switch logic	STSP Normally opened type	
Switch type	Reed switch with contact	
Operating voltage(V)	5~240V AC/DC	
Max. Switching current(mA)	100	
Switching rating(W)	Max. 10	
Current consumption	No	
Voltage drop	2.5V Max. @100mA DC	
Cable	Φ3.3,2C Gray oil resistant PVC (Flame retarded)	
Indicator	Red LED	No
Leakage current	No	
Sensitivity(Gauss)	60~75	
Max. Frequency(Hz)	200	
Shock(m/s^2)	300	
Vibration(m/s^2)	90	
Temperature range(℃) ①	-10~70	
Enclosure classification	IP67(NEMA6)	
Protection circuit	No	

①Note: Please contact us for high remperature resistant(125℃),low remperature resistant(−40~−25℃) and explosion-proof sensor switch.

Ordering code

CS1 J X 020

Number of sensor switch

CS1: Sensor switch

Specification of sensor switch

Specification	Product Series
J: J type	TWH/TWM/ACQ32~100 TWQ32~50/QCK32~63

Model of sensor switch

Blank: two-line magnetic spring pipe with contact/normally opened
X: two-line magnetic spring pipe with contact, without indicator light/normally opened

Connecting way ①

C08: M8 quick joint, length of wire is 150mm
C12: M12 quick joint, length of wire is 150mm
020: length of wire is 2m
030: length of wire is 3m
050: length of wire is 5m
100: length of wire is10m

① Note: The quick joint that is attached at the end of wire is three-needle-male joint-linear-rotary screw thread type. The female joint plug has to be ordered additionally. Please refer to P402 for the specific data.

Mounting

Installation example	Installation method
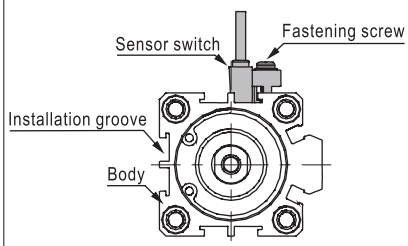	No additional accessories are necessary for the sensor switch of CS1-J, CS1-JX series. It can be directly fixed onto the cylinder, which is convenient and fast. 1. Loosen the clamping screw, slide the inductive switch to the slot and adjust it to the proper position. Tighten the clamping screw to fix.
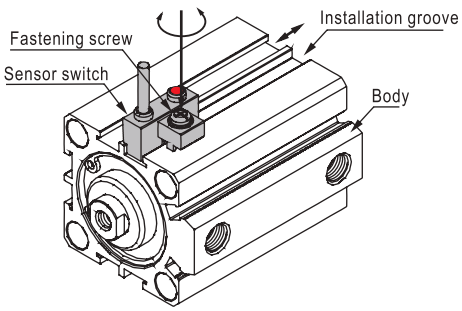	

Dimensions

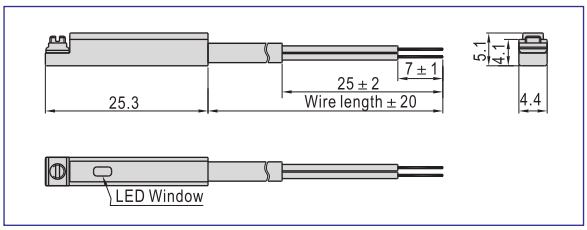

Specification

Item\Type	CS1-G	CS1-GX
Switch logic	STSP Normally opened type	
Switch type	Reed switch with contact	
Operating voltage(V)	5~240V AC/DC	
Max. Switching current(mA)	100	
Switching rating(W)	Max. 10	
Current consumption	No	
Voltage drop	2.5V Max. @100mA DC	
Cable	Φ2.8,2C Gray oil resistant PVC (Flame retarded)	
Indicator	Red LED	No
Leakage current	No	
Sensitivity(Gauss)	60~75	
Max. Frequency(Hz)	200	
Shock(m/s^2)	300	
Vibration(m/s^2)	90	
Temperature range(℃) ①	-10~70	
Enclosure classification	IP67(NEMA6)	
Protection circuit	No	

①Note: Please contact us for high remperature resistant(125℃),low remperature resistant(−40~−25℃) and explosion-proof sensor switch.

Ordering code

CS1 G X 020

Number of sensor switch
CS1: Sensor switch

Specification of sensor switch

Specification	Product Series
G: G type	MD, MK, TR, TC, ACQ, STW TWH, TWM, TWQ QCK, HFZ10~40, HFY10~32 HFP10~32, RMT

Connecting way ①

C08: M8 quick joint, length of wire is 150mm
C12: M12 quick joint, length of wire is 150mm
020: length of wire is 2m
030: length of wire is 3m
050: length of wire is 5m
100: length of wire is10m

Model of sensor switch

Blank: two-line magnetic spring pipe with contact/normally opened
X: two-line magnetic spring pipe with contact, without indicator light/normally opened

① Note: The quick joint that is attached at the end of wire is three-needle-male joint-linear-rotary screw thread type. The female joint plug has to be ordered additionally. Please refer to P402 for the specific data.

Mounting

Installation example	Installation method
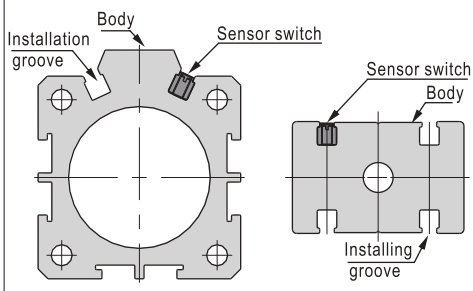	No additional accessories are necessary for the sensor switch of CS1-G, CS1-GX series.It can be directly fixed onto the groove of the cylinder, which is convenient and fast. 1. Loosen the clamping screw on sensor switch, lead the sensor switch to the additional slot and adjust it to the proper position. Tighten the clamping screw to fix.
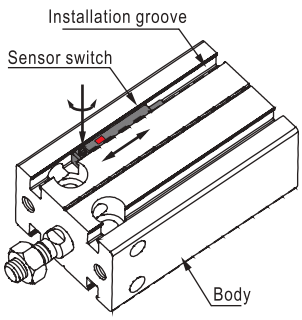	

Sensor switch

Specification

Item\Type	CS1-E	CS1-EX
Switch logic	STSP Normally opened type	
Switch type	Reed switch with contact	
Operating voltage(V)	5~240V AC/DC	
Max. Switching current(mA)	100	
Switching rating(W)	Max. 10	
Current consumption	No	
Voltage drop	2.5V Max. @100mA DC	
Cable	Φ2.8,2C Gray oil resistant PVC (Flame retarded)	
Indicator	Red LED	No
Leakage current	No	
Sensitivity(Gauss)	45~55	
Max. Frequency(Hz)	200	
Shock(m/s^2)	300	
Vibration(m/s^2)	90	
Temperature range(℃) ①	-10~70	
Enclosure classification	IP67(NEMA6)	
Protection circuit	No	

①Note: Please contact us for high remperature resistant(125℃),low remperature resistant(−40~−25℃) and explosion-proof sensor switch.

Dimensions

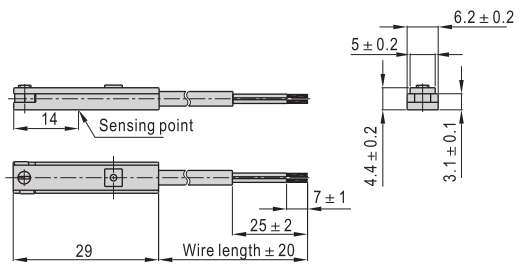

Ordering code

CS1 E X 020

Number of sensor switch
CS1: Sensor switch

Specification of sensor switch

Specification	Product Series
E: E type	Use for SE,ACE series

Model of sensor switch

Blank: two-line magnetic spring pipe with contact/normally opened
X: two-line magnetic spring pipe with contact, without indicator light/normally opened

Connecting way ①

C08: M8 quick joint, length of wire is 150mm
C12: M12 quick joint, length of wire is 150mm
020: length of wire is 2m
030: length of wire is 3m
050: length of wire is 5m
100: length of wire is10m

① Note: The quick joint that is attached at the end of wire is three-needle-male joint-linear-rotary screw thread type. The female joint plug has to be ordered additionally. Please refer to P402 for the specific data.

Mounting

Installation example	Installation method
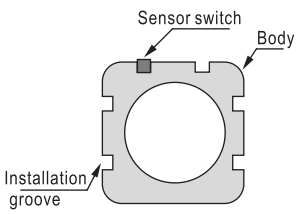	No additional accessories are necessary for the sensor switch of CS1-E, CS1-EX series. It can be directly fixed onto the groove of the cylinder, which is convenient and fast. 1. Adjust the clamping screw on sensor switch slide the sensor switch into the installation slot and adjust it to the proper position and tighten the clamping screw to fix.
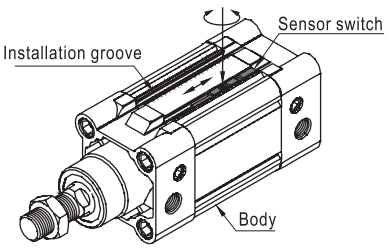	

Dimensions

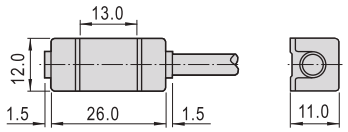

The ordering code of mounting accessories

Bore size\Series	SC,SCL	SU,SUL	SI,SIL	JSI
32	F-SC32H	F-SU32H	F-SI32H	F-SI32H
40	F-SC32H	F-SU40H	F-SI40H	F-SI40H
50	F-SC32H	F-SU50H	F-SI50H	F-SI50H
63	F-SC63H	F-SU63H	F-SI63H	F-SI63H
80	F-SC80H	F-SU80H	F-SI80H	F-SI80H
100	F-SC80H	F-SU100H	F-SI100H	F-SI100H
125	-	-	F-SI125H	F-SI125H
160	-	-	F-SI160H	-
200	-	-	F-SI200H	-

Specification

Item\Type	CS1-F	CS1-FX
Switch logic	STSP Normally opened type	
Switch type	Reed switch with contact	
Operating voltage(V)	5~240V AC/DC	
Max. Switching current(mA)	100	
Switching rating(W)	Max. 10	
Current consumption	No	
Voltage drop	2.5V Max. @100mA DC	
Cable	Φ4.0,2C Gray oil resistant PVC (Flame retarded)	
Indicator	Red LED	No
Leakage current	No	
Sensitivity(Gauss)	60~75	
Max. Frequency(Hz)	200	
Shock(m/s^2)	300	
Vibration(m/s^2)	90	
Temperature range(℃) ①	-10~70	
Enclosure classification	IP67(NEMA6)	
Protection circuit	No	

①Note: Please contact us for high remperature resistant(125℃),low remperature resistant(−40~−25℃) and explosion-proof sensor switch.

Ordering code

CS1 F X 020

Number of sensor switch
CS1: Sensor switch

Specification of sensor switch

Specification	Product Series
F: F type	SI, MI

Model of sensor switch
Blank: two-line magnetic spring pipe with contact/normally opened
X: two-line magnetic spring pipe with contact, without indicator light/normally opened

Connecting way ①

C08: M8 quick joint, length of wire is 150mm
C12: M12 quick joint, length of wire is 150mm
020: length of wire is 2m
030: length of wire is 3m
050: length of wire is 5m
100: length of wire is10m

① Note: The quick joint that is attached at the end of wire is three-needle-male joint-linear-rotary screw thread type. The female joint plug has to be ordered additionally. Please refer to P402 for the specific data.

Mounting

Installation example	Installation method
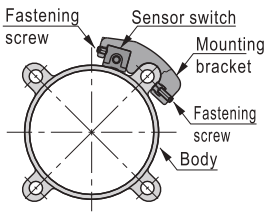 Outline 1: Used with SU, SI, JSI series	When the CS1-F, CS1-FX series sensor switch used with different cylinders, different mounting accessories must be ordered. the details are below. 1. When it used with MI, MA50, 63 series cylinders, you must order the band unit(the ordering code is GXPAB−01), then depend on the below outline 3, fixed the sensor switch on the proper position of the cylinder's body with the band unit. 2. When it used with SC series cylinders, you must order the Mounting bracket (the ordering code is below table) , then depend on the below outline 2, fixed the sensor switch on the proper position of the cylinder's body with the mounting bracket. 3. When it used with SU, SI, JSI cylinders, you must order the mounting bracket(the ordering code is below table), then depend on the below outline 1, fixed the sensor switch on the proper position of the cylinder's body with the mounting bracket.
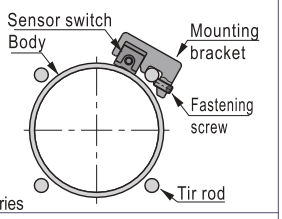 Outline 2: Used with SC series	
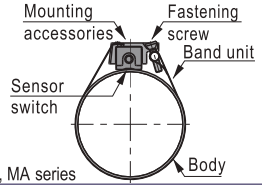 Outline 3: Used with MI, MA series	

Specification

Item\Type	CS1-U	CS1-UX
Switch logic	STSP Normally opened type	
Switch type	Reed switch with contact	
Operating voltage(V)	5~240V AC/DC	
Max. Switching current(mA)	100	
Switching rating(W)	Max. 10	
Current consumption	No	
Voltage drop	2.5V Max. @100mA DC	
Cable	Φ4.0,2C Gray oil resistant PVC (Flame retarded)	
Indicator	Red LED	No
Leakage current	No	
Sensitivity(Gauss)	60~75	
Max. Frequency(Hz)	200	
Shock(m/s^2)	300	
Vibration(m/s^2)	90	
Temperature range(℃) ①	-10~70	
Enclosure classification	IP67(NEMA6)	
Protection circuit	No	

①Note: Please contact us for high remperature resistant(125℃),low remperature resistant(−40~−25℃) and explosion-proof sensor switch.

Dimensions

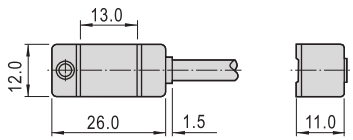

The ordering code of mounting accessories

Bore size\Series	SC,SCL	SU,SUL	SI,SIL	JSI
32	F-SC32H	F-SU32H	F-SI32H	F-SI32H
40	F-SC32H	F-SU40H	F-SI40H	F-SI40H
50	F-SC32H	F-SU50H	F-SI50H	F-SI50H
63	F-SC63H	F-SU63H	F-SI63H	F-SI63H
80	F-SC80H	F-SU80H	F-SI80H	F-SI80H
100	F-SC80H	F-SU100H	F-SI100H	F-SI100H
125	-	-	F-SI125H	F-SI125H
160	-	-	F-SI160H	-
200	-	-	F-SI200H	-

Ordering code

CS1 U X 020

Number of sensor switch
CS1: Sensor switch

Specification of sensor switch

Specification	Product Series
U: U type	SI, MI

Model of sensor switch

Blank: two-line magnetic spring pipe with contact/normally opened
X: two-line magnetic spring pipe with contact, without indicator light/normally opened

Connecting way ①

C08: M8 quick joint, length of wire is 150mm
C12: M12 quick joint, length of wire is 150mm
020: length of wire is 2m
030: length of wire is 3m
050: length of wire is 5m
100: length of wire is10m

① Note: The quick joint that is attached at the end of wire is three-needle-male joint-linear-rotary screw thread type. The female joint plug has to be ordered additionally. Please refer to P402 for the specific data.

Mounting

Installation example	Installation method
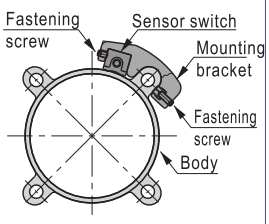 Outline 1: Used with SU, SI, JSI series	When the CS1-U, CS1-UX series sensor switch used with different cylinders, different mounting accessories must be ordered. the details are below. 1. When it used with MI, MA50, 63 series cylinders, you must order the band unit(the ordering code is GXPAB−01), then depend on the below outline 3, fixed the sensor switch on the proper position of the cylinder's body with the band unit. 2. When it used with SC series cylinders, you must order the Mounting bracket (the ordering code is below table) , then depend on the below outline 2, fixed the sensor switch on the proper position of the cylinder's body with the mounting bracket. 3. When it used with SU, SI, JSI cylinders, you must order the mounting bracket(the ordering code is below table), then depend on the below outline 1, fixed the sensor switch on the proper position of the cylinder's body with the mounting bracket.
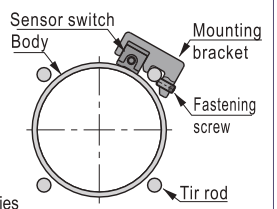 Outline 2: Used with SC series	
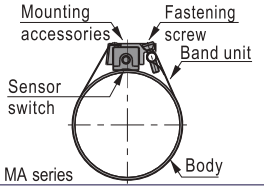 Outline 3: Used with MI, MA series	

Dimensions

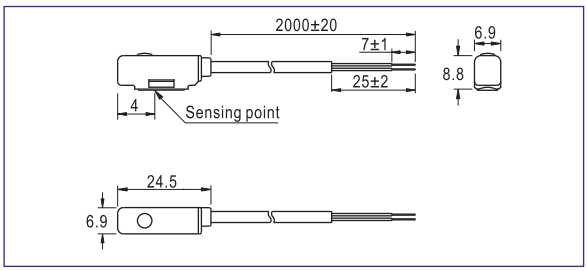

Specification

Item\Type		CS1-M	CS1-MX
Switch logic		STSP Normally opened type	
Switch type		Reed switch with contact	
Operating voltage(V)		5~240V AC/DC	
Max. Switching current(mA)		100	
Switching rating(W)		Max. 10	
Current consumption		No	
Voltage drop		2.5V Max. @100mA DC	
Cable		Φ3.3,2C Gray oil resistant PVC (Flame retarded)	
Indicator		Red LED	No
Leakage current		No	
Sensitivity(Gauss)	S06~S10	45~55	
	S12~S16	55~65	
	S20~S63	65~75	
	A20~A40	65~75	
Max. Frequency(Hz)		200	
Shock(m/s^2)		300	
Vibration(m/s^2)		90	
Temperature range(℃) ①		-10~70	
Enclosure classification		IP67(NEMA6)	
Protection circuit		No	

①Note: Please contact us for high remperature resistant(125℃),low remperature resistant(－40～－25℃) and explosion-proof sensor switch.

Ordering code

CS1 M X 020 S 06

Number of sensor switch

CS1: Sensor switch

Specification of sensor switch

Specification	Product Series
M: M type	PB, MI

Model of sensor switch

Blank: two-line magnetic spring pipe with contact/normally opened
X: two-line magnetic spring pipe with contact, without indicator light/normally opened

① **Connecting way**

C08: M8 quick joint, length of wire is 150mm
C12: M12 quick joint, length of wire is 150mm
020: length of wire is 2m
030: length of wire is 3m
050: length of wire is 5m
100: length of wire is10m

Bore size

Cylinder barrel material	Bore size
Aluminum alloy	20: Φ20mm
	25: Φ25mm
	32: Φ32mm
	40: Φ40mm
Stainless steel	06: Φ6mm
	08: Φ8mm
	10: Φ10mm
	12: Φ12mm
	16: Φ16mm
	20: Φ20mm
	25: Φ25mm
	32: Φ32mm
	40: Φ40mm
	50: Φ50mm
	63: Φ63mm

Cylinder Barrel material

S: Stainless steel
A: Aluminum alloy

① Note: The quick joint that is attached at the end of wire is three-needle-male joint-linear-rotary screw thread type. The female joint plug has to be ordered additionally. Please refer to P402 for the specific data.

Mounting

Installation example	Installation method
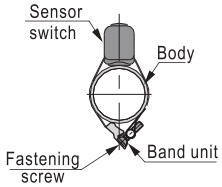	No additional accessories are necessary for the sensor switch of CS1-M, CS1-MX series. It can be directly fixed onto the cylinder, which is convenient and fast. 1. Strap band round the cylinder barrel. Snap the clamping screw into button orifice and adjust it to the proper position. Properly tighten the clamping screw to fix.

Dimensions

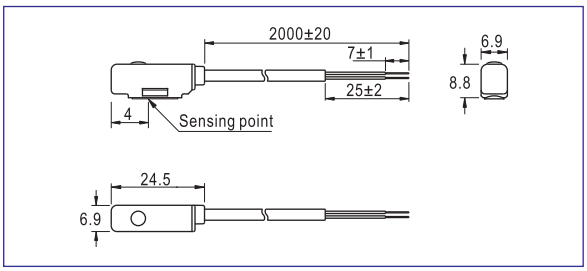

Specification

Item\Type	CS1-T	CS1-TX
Switch logic	STSP Normally opened type	
Switch type	Reed switch with contact	
Operating voltage(V)	5~240V AC/DC	
Max. Switching current(mA)	100	
Switching rating(W)	Max. 10	
Current consumption	No	
Voltage drop	2.5V Max. @100mA DC	
Cable	Φ3.3,2C Gray oil resistant PVC (Flame retarded)	
Indicator	Red LED	No
Leakage current	No	
Sensitivity(Gauss)	55~65	
Max. Frequency(Hz)	200	
Shock(m/s^2)	300	
Vibration(m/s^2)	90	
Temperature range(℃) ①	-10~70	
Enclosure classification	IP67(NEMA6)	
Protection circuit	No	

①Note: Please contact us for high remperature resistant(125℃),low remperature resistant(−40~−25℃) and explosion-proof sensor switch.

Ordering code

CS1 T X 020 A 32

Number of sensor switch
CS1: Sensor switch

Specification of sensor switch

Specification	Product Series
T: T type	TWG

Model of sensor switch

Blank: two-line magnetic spring pipe with contact/normally opened
X: two-line magnetic spring pipe with contact, without indicator light/normally opened

Bore size

32: Φ32mm
40: Φ40mm
50: Φ50mm

Cylinder Barrel material
A: Aluminum alloy

Connecting way ①

C08: M8 quick joint, length of wire is 150mm
C12: M12 quick joint, length of wire is 150mm
020: length of wire is 2m
030: length of wire is 3m
050: length of wire is 5m
100: length of wire is10m

① Note: The quick joint that is attached at the end of wire is three-needle-male joint-linear-rotary screw thread type. The female joint plug has to be ordered additionally. Please refer to P402 for the specific data.

Mounting

Installation example	Installation method
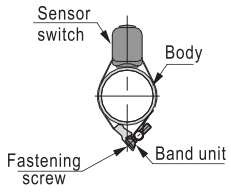	No additional accessories are necessary for the sensor switch of CS1-T, CS1-TX series. It can be directly fixed onto the cylinder, which is convenient and fast. 1. Strap band round the cylinder barrel. Snap the clamping screw into button orifice and adjust it to the proper position. Properly tighten the clamping screw to fix.

Male Straight Connector

Three Pin–male joint-linear-rotary thread

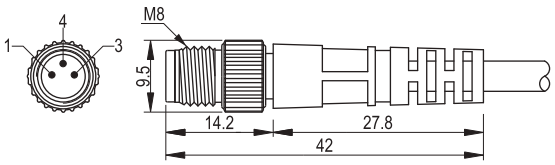

Note: There is no need to order it individually. What only needs to do is to choose the sensor switch with quick joint.

Three Pin-male joint-linear-rotary thread

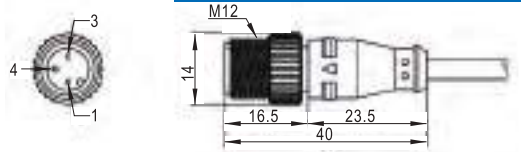

Note: There is no need to order it individually. What only needs to do is to choose the sensor switch with quick joint.

Wiring diagram

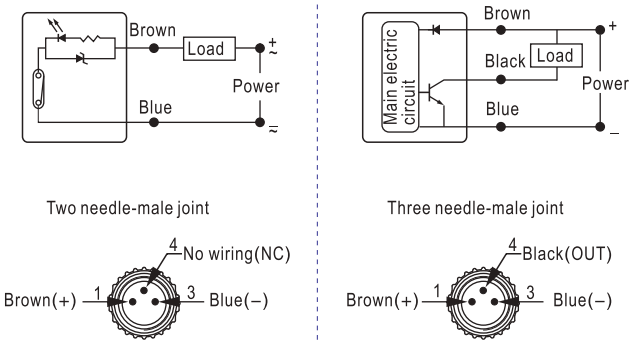

Female Connector

M83F 4 B 02 PVC

Joint type
M83F: M8 × 1.0 three need-female joint (linear)
M83FL: M8 × 1.0three need-female joint (right angle)
M123F: M12 × 1.0three need-female joint (linear)
M123FL: M12 × 1.0three need-female joint (right angle)

Cable material
PVC: PVC tegument
PUR: PUR tegument

Wire length
02: Wire length is 2 m
03: Wire length is 3 m
05: Wire length is 5 m
10: Wire length is 10 m

Cable OD
2.9: OD 2.9mm
3.3: OD 3.3mm
4.0: OD 4.0mm
4.5: OD 4.5mm
5.2: OD 5.2mm

Cable color
B: Black (three core)
G: Grey (two core)

M83F(Three Pin-female joint-linear)

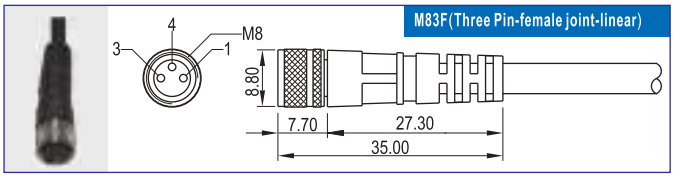

M83FL(three Pin-female joint-90° right angle)

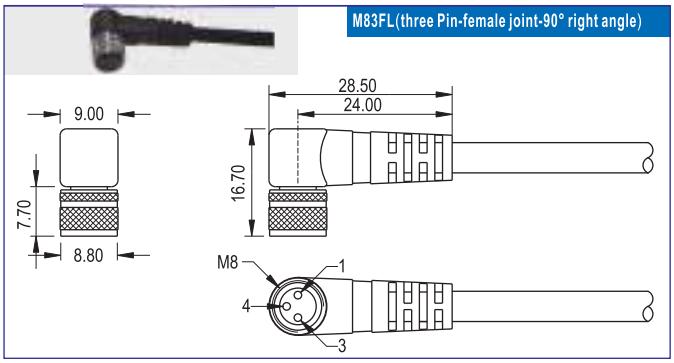

M123F(Three Pin-female joint-linear)

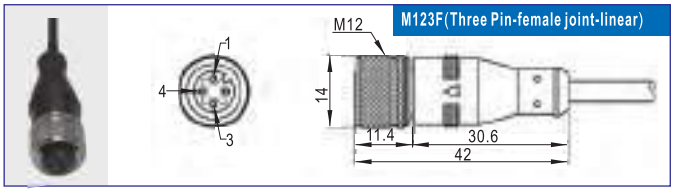

M123FL(Three Pin-female joint-90° right angle)

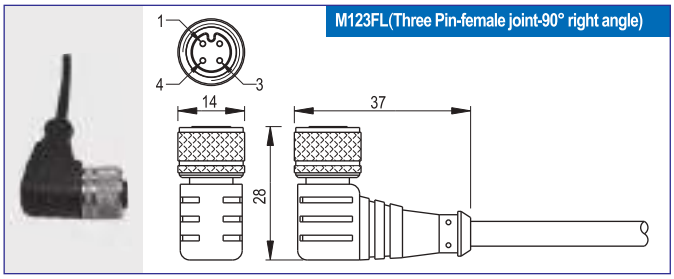

Sensor switch

Summary of acccessories

The accessories is necessary for intact air system. AirTAC has many types of accessories for your choice:
1. Shock absorber
2. Polyurethane re-coil hosepart
3. Fitting, Silencer, Speed Controller

Shock absorber

ACA、ACJ Series..... 404

Polyurethane re-coil hosepart

PU Tube Series..... 408

Pilot no-return valve

PCV series..... 410

Product feature

1. Excellent and stable deceleration and shock absorbing; if impacted by load, the resistance will automatically adjust.
2. Outer body of integrated structure is treated by QPQ, which has optimum corrosion and wear resistance and can withstand high pressure; it is easy to install and adjust for all threaded outer body which has good heat dissipation.
3. With high hardness stainless steel shaft, the shock absorber has better impact and corrosion resistance, and it can work under adverse conditions.
4. Special oiling process leads to stable shock absorbing.
5. Compact structure and high max. absorbed energy.
6. We use Special lubricants as buffer medium, which adapts to wide temperature range and ensures stable cushioning.

Specification

Model	Stroke (mm)	Max. energy absorbed (Nm)	Max. energy absorbed/hour (Nm/h)	Max. effective mass(kg)			Max. impact speed(m/s)			Weight (g)
				High speed	Middle speed	Low speed	High speed	Middle speed	Low speed	
ACA0806	6	3	5400	5	20	25	4	2	1	12
ACA1007	7	6	14500	10	40	50	4	2	1	26
ACA1210	10	10	30000	18	60	80	4	2	1	40
ACA1215	15	12	35000	20	75	100	4	2	1	48
ACA1412	12	18	36000	30	110	150	4	2	1	70
ACA1416	16	22	39000	40	140	180	4	2	1	78
ACA1420	20	25	45000	45	155	200	4	2	1	85
ACA2020	20	60	50000	240	660	960	4	2	1	175
ACA2025	25	65	54000	260	720	1040	4	2	1	185
ACA2030	30	70	58000	280	780	1120	4	2	1	210
ACA2040	40	80	65000	320	890	1280	4	2	1	225
ACA2525	25	100	75000	400	1100	1600	4	2	1	290
ACA2550	50	150	85000	600	1650	2400	4	2	1	370
ACA2725	25	140	85000	560	1550	2240	4	2	1	372
ACA2750	50	250	95000	1000	2780	4000	4	2	1	475
ACA3325	25	180	100000	720	2000	2880	4	2	1	596
ACA3350	50	300	120000	1200	3300	4800	4	2	1	750
ACA3625	25	220	135000	880	2400	3500	4	2	1	702
ACA3650	50	350	150000	1400	2500	5600	4	2	1	889

Model	Stroke (mm)	Max. energy absorbed(Nm)	Max. energy absorbed/hour (Nm/h)	Max. effective mass(kg)	Max. impact speed(m/s)	Weight (g)
ACJ1007	7	6	14500	50	4	28
ACJ1210	10	10	30000	80	4	43
ACJ1412	12	20	36000	160	4	75
ACJ2020	20	60	50000	960	4	189
ACJ2525	25	100	75000	1600	4	308
ACJ2550	50	150	85000	2400	4	395
ACJ2725	25	140	85000	2240	4	396
ACJ2750	50	250	95000	4000	4	510
ACJ3325	25	180	100000	2880	4	540
ACJ3350	50	300	110000	4800	4	800
ACJ3625	25	220	125000	2500	4	750
ACJ3650	50	350	130000	5600	4	950
ACJ4225	25	350	150000	5600	4	1150
ACJ4250	50	700	180000	11200	4	1420
ACJ4275	75	1050	210000	16800	4	1720

Ordering code

ACA 20 20–1 N

Model

ACA: Self–compensation type shock absorber
ACJ: Adjustable type shock absorber

Body male thread

08: M8
10: M10
12: M12
14: M14
20: M20
25: M25
27: M27
33: M33
36: M36

Stroke

The pecification for detail

Prevention crash cap

Body male thread	Prevention crash cap
M20 and above	Blank: Plastic cap
	F: Iron cap
	N: No cap
M20 and below	Blank: Plastic cap
	N: No cap

Impact speed

Model	Impact speed
ACA	1: High speed(Light load)
	2: Middle speed(Middle load)
	3: Low speed(Heavy load)
ACJ	Not this code

Shock absorber

Max. absorbed energy and speed curve

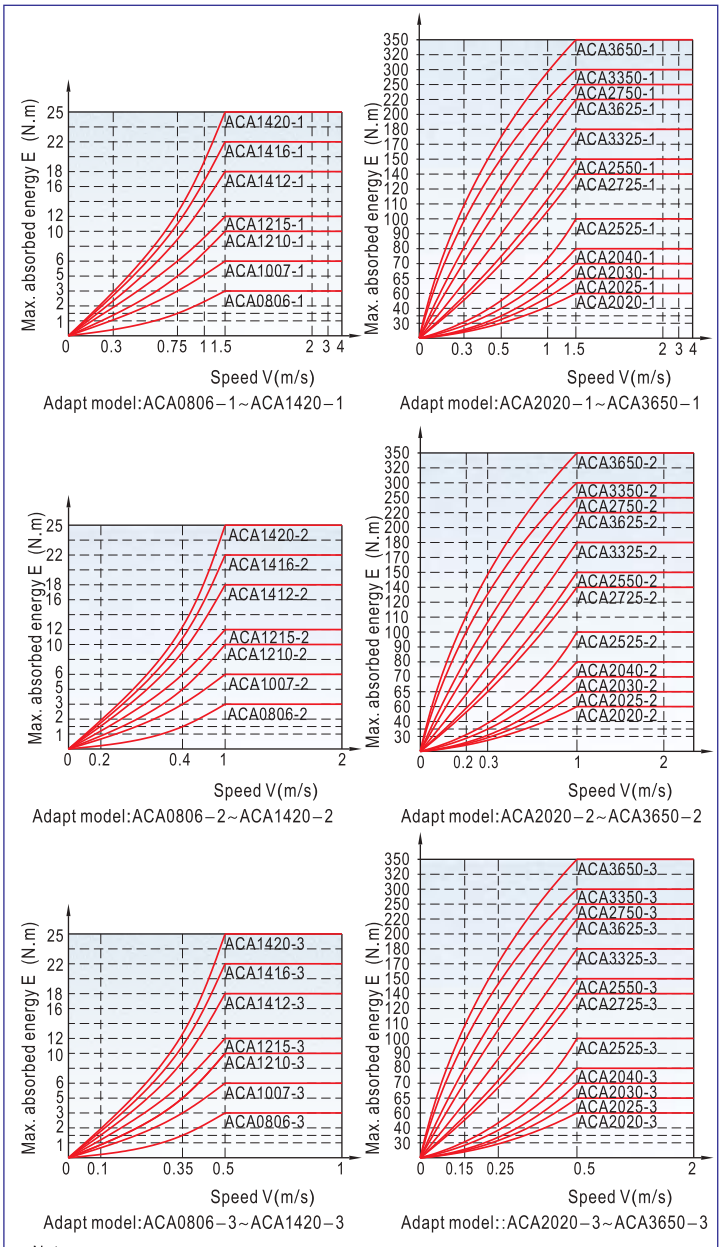

Adapt model:ACA0806－1~ACA1420－1 | Adapt model:ACA2020－1~ACA3650－1

Adapt model:ACA0806－2~ACA1420－2 | Adapt model:ACA2020－2~ACA3650－2

Adapt model:ACA0806－3~ACA1420－3 | Adapt model::ACA2020－3~ACA3650－3

Note：
1. The interval under the red line shows the energy range absorbed by corresponding shock absorber.
2. It is better to use 20%-80% of the Max. absorbed energy.

Buffer curve

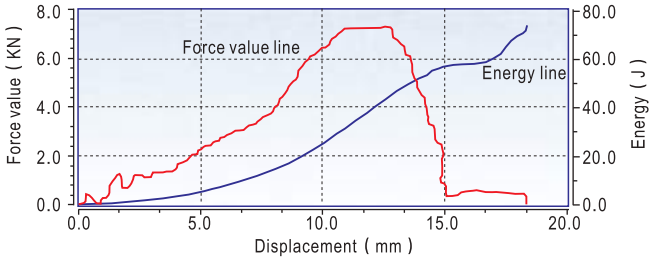

Note: As the chart shows, energy is absorbed by a lower reaction force at the beginning of the stroke, then by a smooth linear deceleration. It decelerates smoothly at last.

Inner structure and material of major parts

型號 A

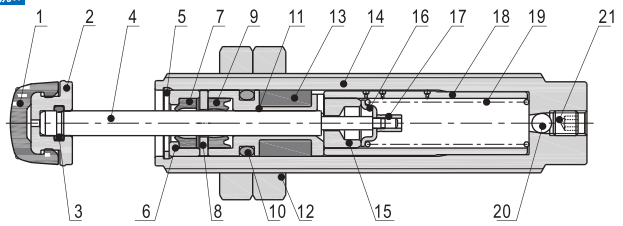

No.	Item	Material
1	Bump cap	PA66(M8)\TPU(M10~M14)\TPU or S45C(M20~M42)
2	Bump cap(core)	No(M8)\Cutting steel(Others)
3	O-ring	NBR
4	Piston rod	Stainless steel(M8~M27)\S45C (M33~M42)
5	Clip	No(M8~M10)\Spring steel(M12~M42)
6	Front cover	Brass (M8)\ Cutting steel (M10)\Aluminum(M12~M42)
7	Front cover gasket	No (M8)\ TPU(M10~M42)
8	Washer	Spring steel
9	Front cover gasket	NBR
10	O-ring	NBR
11	Correcting body	Brass
12	Nut	Ss41
13	Accumulator	Foamex
14	Body	Cutting steel
15	Piston	Brass
16	Spring serat	Spring steel
17	Busher	Copper(M8~M12)\Aluminum(M20~M27)
18	Inlet body	Cutting steel (M8~M14)\Seamless steel tuble(M20~M42)
19	Spring	SWPB
20	Steel ball	GCr15
21	Set screw	Low alloy steel

ACJ

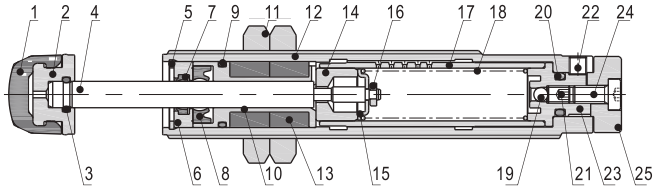

No.	Item	Material
1	Bump cap	PA66(M8)\TPU(M10~M14)\TPU or S45C(M20~M42)
2	Bump cap(core)	No(M8)\Cutting steel(Others)
3	O-ring	NBR
4	Piston rod	Stainless steel (M8~M27)\S45C (M33~M42)
5	Clip	No(M8~M10)\Spring steel(M12~M42)
6	Front cover	Brass (M8)\ Cutting steel (M10)\Aluminum(M12~M42)
7	Front cover gasket	No (M8)\ TPU(M10~M42)
8	Front cover gasket	NBR
9	O-ring	NBR
10	Correcting body	Brass
11	Nut	SS41
12	Body	Cutting steel
13	Accumulator	Foamex
14	Piston	Brass
15	Spring serat	Spring steel
16	Busher	Copper(M8~M12)\Aluminum(M20~M27)
17	Inlet body	Cutting steel (M8~M14)\Seamless steel tuble(M20~M42)
18	Spring	SWPB
19	Ball	GCr15
20	O-ring	NBR
21	Set screw	Low alloy steel
22	Set screw	Low alloy steel
23	Back cover	Brass
24	Screw	Low alloy steel
25	Knob	Aluminum alloy

Dimensions

ACA

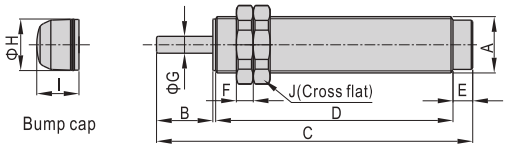

Model\Item	A	B	C	D	E	F	G	H	I	J
ACA0806	M8×1.0	6	45	31	5	4	3	6.5	6	11
ACA1007	M10×1.0	7	55	40	5	4	3	8.5	7.5	14
ACA1210	M12×1.0	10	62	46	5	4	3	10	7.5	17
ACA1215	M12×1.0	15	78	57	5	4	3	10	7.5	17
ACA1412	M14×1.5	12	80.5	62.5	5	6	4	12	12	19
ACA1416	M14×1.5	16	92.5	70.5	5	6	4	12	12	19
ACA1420	M14×1.5	20	103	77	5	6	4	12	12	19
ACA2020	M20×1.5	20	112.5	84.5	7	6	6	18	15	26
ACA2025	M20×1.5	25	122.5	89.5	7	6	6	18	15	26
ACA2030	M20×1.5	30	142	104	7	6	6	18	15	26
ACA2040	M20×1.5	40	167.5	119.5	7	6	6	18	15	26
ACA2525	M25×1.5	25	123	89	8	6	6	23	16	32
ACA2550	M25×1.5	50	183	124	8	6	6	23	16	32
ACA2725	M27×1.5	25	127	93	8	6	8	24.5	17	36
ACA2750	M27×1.5	50	192	133	8	6	8	24.5	17	36

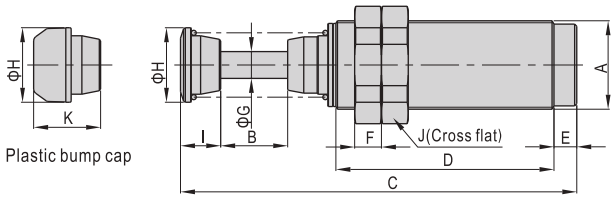

Model\Item	A	B	C	D	E	F	G	H	I	J	K
ACA3325	M33×1.5	25	148	81.5	8.5	10	10	27.8	15	41	25
ACA3350	M33×1.5	50	213	121.5	8.5	10	10	27.8	15	41	25
ACA3625	M36×1.5	25	148	81.5	8.5	10	10	27.8	15	46	25
ACA3650	M36×1.5	50	213	121.5	8.5	10	10	27.8	15	46	25

ACJ

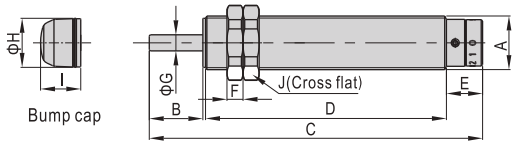

Model\Item	A	B	C	D	E	F	G	H	I	J
ACJ1007	M10×1.0	7	66	45	11	4	3	8.5	7.5	14
ACJ1210	M12×1.0	10	73	51	11	4	3	10	7.5	17
ACJ1412	M14×1.5	12	91	66.5	11.5	6	4	12	12	19
ACJ2020	M20×1.5	20	124.5	90	13.5	6	6	18	15	26
ACJ2525	M25×1.5	25	132.5	92	14.5	6	6	23	16	32
ACJ2550	M25×1.5	50	192.5	127	14.5	6	6	23	16	32
ACJ2725	M27×1.5	25	137	96.5	14.5	6	8	24.5	17	36
ACJ2750	M27×1.5	50	202	136.5	14.5	6	8	24.5	17	36

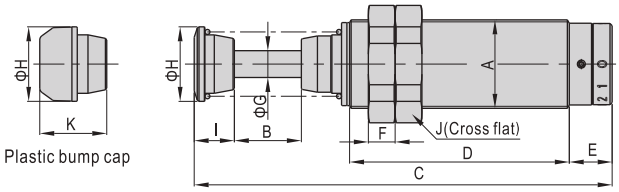

Model\Item	A	B	C	D	E	F	G	H	I	J	K
ACJ3325	M33×1.5	25	156	82	16	10	10	27.8	15	41	25
ACJ3350	M33×1.5	50	221	122	16	10	10	27.8	15	41	25
ACJ3625	M36×1.5	25	156	82	16	10	10	27.8	15	46	25
ACJ3650	M36×1.5	50	221	122	16	10	10	27.8	15	46	25
ACJ4225	M42×1.5	25	161.5	85.5	16	12	12	34.8	15	50	25
ACJ4250	M42×1.5	50	226.5	125.5	16	12	12	34.8	15	50	25
ACJ4275	M42×1.5	75	291.5	165.5	16	12	12	34.8	15	50	25

Accessories

How to set stop coller

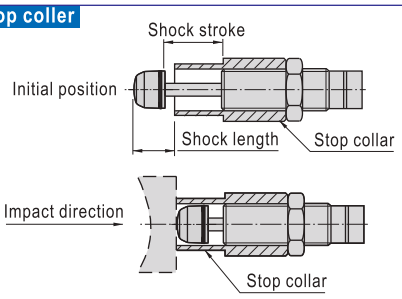

Ordering code

F-ACA 08 LM

- Accessory
- Model
- Female thread size
  - 08: M8
  - 10: M10
  - 12: M12
  - 14: M14
  - 20: M20
  - 25: M25
  - 27: M27
  - 33: M33
  - 36: M36
  - 42: M42
- Accessories type
  - LM: Stop collar
  - FA: Flange

Dimensions

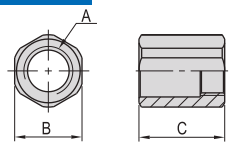

Model\Item	A	B	C
F-ACA08LM	M8×1.0	11	14
F-ACA10LM	M10×1.0	14	16
F-ACA12LM	M12×1.0	17	20

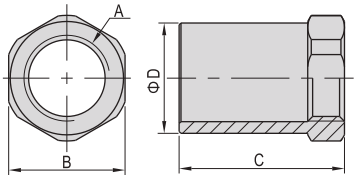

Model\Item	A	B	C	D
F-ACA14LM	M14×1.5	19	27	18
F-ACA20LM	M20×1.5	26	35	25
F-ACA25LM	M25×1.5	32	45	31
F-ACA27LM	M27×1.5	36	50	35
F-ACA33LM	M33×1.5	41	80	40
F-ACA36LM	M36×1.5	46	80	45

F-ACA36FA

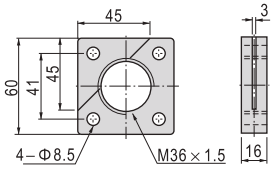

F-ACA42FA

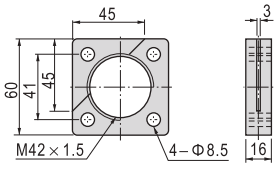

Selecting list

Model	Compatible absorber
F-ACA08LM	ACA0806
F-ACA10LM	ACA1007, ACJ1007
F-ACA12LM	ACA1210, ACA1215, ACJ1210
F-ACA14LM	ACA1412, ACA1416,ACA1420,ACJ1412
F-ACA20LM	ACA2020, ACA2025, ACA2030, ACA2040, ACJ2020
F-ACA25LM	ACA2525, ACA2550, ACJ2525, ACJ2550
F-ACA27LM	ACA2725, ACA2750, ACJ2725, ACJ2750
F-ACA33LM	ACA3325, ACA3350, ACJ3325, ACJ3350
F-ACA36LM	ACA3625, ACA3650, ACJ3625, ACJ3650
F-ACA36FA	ACA3625, ACA3650, ACJ3625, ACJ3650
F-ACA42FA	ACJ4225, ACJ4250, ACJ4275

How to select

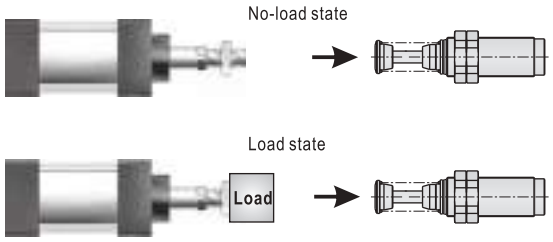

Theoretical energy parameter table for cylinders under no-load state Unit: J (N.m)

Stroke(mm)		6	7	10	12	15	16	20	25	30	40	50	75
Bore size (mm)	6	0.102	0.119	0.170	0.203	0.254	0.271	0.339	0.424	0.509	0.678	0.848	1.27
	8	0.181	0.211	0.301	0.362	0.452	0.482	0.603	0.754	0.904	1.21	1.51	2.26
	10	0.283	0.330	0.471	0.565	0.707	0.754	0.942	1.18	1.413	1.88	2.36	3.53
	12	0.407	0.475	0.678	0.814	1.017	1.085	1.36	1.70	2.035	2.71	3..39	5.09
	16	0.723	0.844	1.21	1.45	1.809	1.929	2.41	3.01	3.617	4.82	6.03	9.04
	20	1.13	1.32	1.88	2.26	2.826	3.014	3.77	4.71	5.652	7.54	9.42	14.13
	25	1.77	2.06	2.94	3.53	4.416	4.710	5.89	7.36	8.831	11.8	14.7	22.1
	32	2.89	3.38	4.82	5.79	7.235	7.717	9.65	12.1	14.47	19.3	24.1	36.2
	40	4.52	5.28	7.54	9.04	11.3	12.06	15.1	18.8	22.6	30.1	37.7	56.5
	50	7.07	8.24	11.8	14.1	17.7	18.84	23.6	29.4	35.33	47.1	58.9	88.3
	63	11.2	13.1	18.7	22.4	28.0	29.91	37.4	46.7	56.08	74.8	93.5	140.2
	80	18.1	21.1	30.1	36.2	45.2	48.23	60.3	75.4	90.43	120.6	150.7	226.1
	100	28.3	33.0	47.1	56.5	70.7	75.36	94.2	117.8	141.3	188.4	235.5	353.3
	125	44.2	51.5	73.6	88.3	110.4	117.8	147.2	184.0	220.8	204.4	368.0	552.0
	160	72.3	84.4	120.6	144.7	180.9	192.9	241.2	301.4	361.7	482.3	602.9	904.3
	200	113.0	131.9	188.4	226.1	282.6	301.4	376.8	471.0	565.2	753.6	942.0	1413.0
	250	176.6	206.1	294.4	353.3	441.6	471.0	588.5	735.9	883.1	1177.5	1471.9	2207.8
	320	289.4	337.6	482.3	578.8	723.5	771.7	964.6	1205.8	1446.9	1929.2	2411.5	3617.3

For example:
When the pressure is 0.6MPa, bore size of ϕ40 under no-load state plus shock stroke of 12mm can produce energy of 9.04 N.m. Refer to the specification table, you will find ACA1412 fits.
Note: Cylinders under full-load state can produce as twice as the energy shown above.

Installation and Operation

1. The scale range of adjustable shock absorbers is 0 to 9 (8). Factory set is at 6 (4) position. 0 means the softest, while 9 means the hardest;
2. Correct selection of shock absorbers can ensure a smooth deceleration and good shock-absorbing properties;
3. If there exists rebounding at the beginning of the stroke, it shows the effective weight is too high. In this case, self-compensation type shall be replaced by high speed type (-1), while adjustable type shall be adjusted to softer, that is closer to 0;
4. If there exists rebounding at the end of the stroke, it shows the effective weight is too low. In this case, self-compensation type shall be replaced by low speed type (-3), while adjustable type shall be adjusted to harder, that is closer to 9;
5. In the work process, lateral load should be avoided as possible as one can. Eccentric angle must be controlled within 3°. Shock absorbers shall be securely locked;

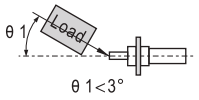

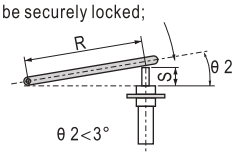

6. The operating temperature range shall be -10 to 80℃;
7. To extend the service life, piston shall be stopped 1mm before reaching the end. It is better to install set screw with positioning and precise adjustment;
8. If two or more shock absorbers are installed at the same side, please make sure that they act synchronously;
9. No painting, welding or cleaning with corrosive substance on the body as well as the piston rod.
10. when installed the absorber, the moment forced on absorber can't be out of the range given in below list or may cause the absorber damage.

Compatible absorber	Male thread Spec(of body)	Max. Assembly Force on Absorber(N.m)
ACA0806	M8×1.0	2.0
ACA1007, ACJ1007	M10×1.0	3.5
ACA1210,ACA1215, ACJ1210	M12×1.0	8.0
ACA1412, ACA1416, ACA1420, ACJ1412	M14×1.5	11.0
ACA2020,ACA2025,ACA2030, ACA2040, ACJ2020	M20×1.5	24.0
ACA2525, ACA2550, ACJ2525, ACJ2550	M25×1.5	40.0
ACA2725, ACA2750, ACJ2725, ACJ2750	M27×1.5	63.0

Calculation of energy under load state

Horizontal impact

① Horizontal impact

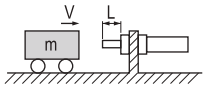

Impact weight (kg): m
Impact speed (m/s): v
Kinetic energy (J(N.m): $E1=\frac{m\times v^2}{2}$
Propelling energy(J(N.m): E2=0
Gross energy (J(N.m): E=E1+E2

② Horizontal impact with cylinder thrust

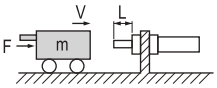

Impact weight (kg): m
Impact speed (m/s): v
Kinetic energy (J(N.m): $E1=\frac{m\times v^2}{2}$
Propelling energy(J(N.m): E2=F×L
Gross energy (J(N.m): E=E1+E2

Vertical impact

① Free fall

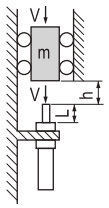

Impact weight (kg): m
Impact speed (m/s): v
Kinetic energy (J(N.m): E1=m×g×h
Propelling energy(J(N.m): E2=m×g×L
Gross energy (JN.m): E=E1+E2

② Push-down by cylinder

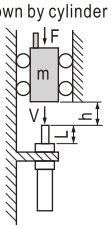

Impact weight (kg): m
Impact speed (m/s): v
Kinetic energy (J(N.m): $E1=\frac{m\times v^2}{2}$
Propelling energy(J(N.m): E2=(mg+F)×L
Gross energy (J(N.m): E=E1+E2

Rotation impact

① Rocker

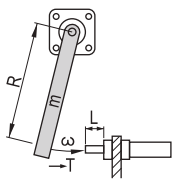

Impact weight (kg): m
Impact speed (m/s): v=R× ω
Kinetic energy (J(N.m): $E1=\frac{I\times \omega^2}{2}$
Propelling energy(J(N.m): $E2=\frac{T\times L}{R}$
Gross energy (J(N.m): E=E1+E2

② Rotation

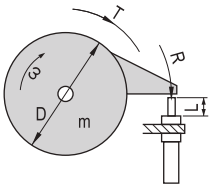

Impact weight (kg): m
Impact speed (m/s): v=R× ω
Kinetic energy (J(N.m): $E1=\frac{I\times \omega^2}{2}$
Propelling energy(J(N.m): $E2=\frac{T\times L}{R}$
Gross energy (J(N.m): E=E1+E2

Code explanation

Code	Explanation	Unit	Code	Explanation	Unit
m	Impact weight	kg	L	Shock stroke	m
V	Impact speed	m/s	h	Height	m
E	Gross energy	J(N.m)	T	Torque	N.m
E1	Kinetic energy (Potential energy)	J(N.m)	N	Round per Minute	rpm
E2	Propelling energy	J(N.m)	R	Distance fron rotation center to impact point	m
g	Gravity acceleration	9.8(m/s²)	I	Moment of Inertia (I=mr²/2)	kg×m²
F	Thrust((π ×D²×P)/4)	N	ω	Angular velocity(ω=2πN/60) (90° =1.57rad/s)	rad/s
D	Nore size	mm			
P	Air pressure	MPa			

Product feature

1. Plastic polyurethane material conforms to the ROHS environment protection requirement.
2. High elasticity: small bend radius enables PU tube to pass through the tight space.
3. Anti-knot: better anti-knot effect than other plastic tube.
4. Excellent flexibility: it can bear repeated expansion.
5. Anti-abrasion: long working life and suitable for the environment in which it is easy to be worn.
6. Low permeability of gas: relieve the problems of leakage and pollution.
7. Good anti-solubility: no solvent leaks, therefore it will not pollute the environment.
8. Low compression: maintain excellent physical character.
9. Wide resistance: it has certain resistance to chemicals, water, fuel, oil and bacterium.

Specification

Number ①	Tube OD (mm)	Tube ID (mm)	Wall Thikness (mm)	Package Length (m)	Working Pressure at 23℃(bar)②	Burst pressure at 23℃(bar)	Bend radius (mm)	Weight per 100M(kg)	Tempressure (℃)
US98A040025□□	4.0	2.5	0.75	200	8.0	35	10	0.94	
US98A060040□□	6.0	4.0	1.00	200	7.5	30	15	1.93	
US98A080050□□	8.0	5.0	1.50	100	8.0	35	20	3.66	
US98A080055□□	8.0	5.5	1.25	100	6.0	24	20	3.25	
US98A080060□□	8.0	6.0	1.00	100	4.0	16	25	2.70	
US98A100065□□	10.0	6.5	1.75	100	8.0	32	25	5.44	
US98A100080□□	10.0	8.0	1.00	100	2.5	10	40	3.47	
US98A120080□□	12.0	8.0	2.00	100	7.5	30	35	7.56	–20~70
US98A120100□□	12.0	10.0	1.00	100	2.0	8	60	4.24	
US98A160120□□	16.0	12.0	2.00	100	7.5	30	80	8.32	
UE95A040025□□	4.0	2.5	0.75	200	8.0	33	8	0.94	
UE95A060040□□	6.0	4.0	1.00	200	7.0	28	12	1.91	
UE95A080050□□	8.0	5.0	1.50	100	8.0	33	17	3.58	
UE95A080055□□	8.0	5.5	1.25	100	6.0	22	17	3.18	
UE95A080060□□	8.0	6.0	1.00	100	3.7	15	20	2.64	
UE95A100065□□	10.0	6.5	1.75	100	7.5	30	20	5.32	
UE95A100080□□	10.0	8.0	1.00	100	2.2	9	36	3.39	
UE95A120080□□	12.0	8.0	2.00	100	7.0	28	30	7.27	–40~70
UE95A120100□□	12.0	10.0	1.00	100	1.8	7	54	4.08	
UE95A160120□□	16.0	12.0	2.00	100	7.0	30	75	8.13	

Note:

①:The first square of "□□" in the type column is for ordering code "unit" and the second is for "color". Blue,black, orange and clear are standardd colors. Individual orders shall be placed for other colors.

②:Working pressure:3 to 1 safety factor.

Ordering code

US98A 060 040 100M BU

Model
- US98A: Ester Base,Shore A98 ± 2
- UE95A: Ether Base,Shore A95 ± 2

Tube OD
- 040: Φ4.0mm
- 060: Φ6.0mm
- 080: Φ8.0mm
- 100: Φ10.0mm
- 120: Φ12.0mm
- 160: Φ16.0mm

Tube ID
- 025: Φ2.5mm
- 040: Φ4.0mm
- 050: Φ5.0mm
- 055: Φ5.5mm
- 060: Φ6.0mm
- 065: Φ6.5mm
- 080: Φ8.0mm
- 100: Φ10.0mm
- 120: Φ12.0mm

Material length
- 100M: 100m/coil
- 200M: 200m/coil

① Standard color
- BU: Blue
- BK: Black
- GE: Orange
- CR: Clear
- WH: White
- CB: Clear Blue
- R: Red
- Y: Yellow

① Blue,black,orange and clear are standard colors. Individual orders shall be placed for other colors.

Product feature

1. Plastic polyurethane material conforms to the ROHS environment protection requirement.
2. High elasticity: small bend radius enables PU tube to pass through the tight space.
3. Anti-knot: better anti-knot effect than other plastic tube.
4. Excellent flexibility: it can bear repeated expansion.
5. Anti-abrasion: long working life and suitable for the environment in which it is easy to be worn.
6. Low permeability of gas: relieve the problems of leakage and pollution.
7. Good anti-solubility: no solvent leaks, therefore it will not pollute the environment.
8. Low compression: maintain excellent physical character.
9. Wide resistance: it has certain resistance to chemicals, water, fuel, oil and bacterium.

Technical chart

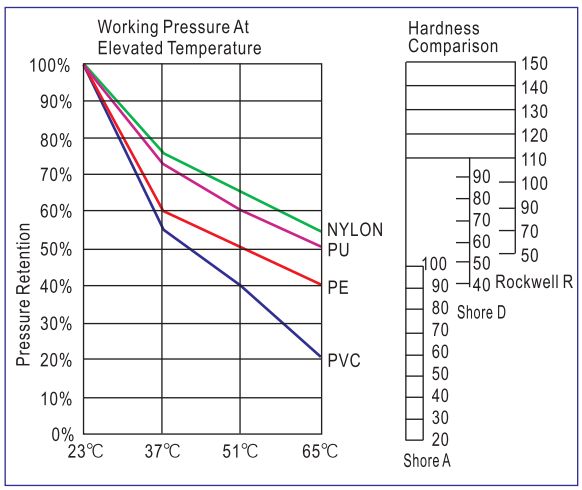

Specification

Number ①	Tube OD (mm)	Tube ID (mm)	Working Pressure at 23℃(bar)②	Burst pressure at 23℃(bar)	Bend radius(mm)	Material Length(kg)	Tempressure (℃)
UCS080050□060□□	8.0	5.0	8.0	35	38	6	−20~70
UCS080050□090□□	8.0	5.0	8.0	35	38	9	
UCS080050□120□□	8.0	5.0	8.0	35	38	12	
UCS080050□150□□	8.0	5.0	8.0	35	38	15	
UCS080055□060□□	8.0	5.5	6.0	24	38	6	
UCS080055□090□□	8.0	5.5	6.0	24	38	9	
UCS080055□120□□	8.0	5.5	6.0	24	38	12	
UCS080055□150□□	8.0	5.5	6.0	24	38	15	
UCS100065□060□□	10.0	6.5	8.0	32	50	6	
UCS100065□090□□	10.0	6.5	8.0	32	50	9	
UCS100065□120□□	10.0	6.5	8.0	32	50	12	
UCS100065□150□□	10.0	6.5	8.0	32	50	15	
UCS120080□060□□	12.0	8.0	7.5	30	60	6	
UCS120080□090□□	12.0	8.0	7.5	30	60	9	
UCS120080□120□□	12.0	8.0	7.5	30	60	12	
UCS120080□150□□	12.0	8.0	7.5	30	60	15	

Note:

①: "□" in the type column is for "color", and "□□" is for "coupling type" and "coupling mode". Blue, black, orange and clear are standard colors. Individual orders shall be placed for other colors.

②: Working pressure: 3 to 1 safety factor.

③: Material length: length of operating status=(0.8~0.9)xMaterial length.

Ordering code

UCS 080 050 BU 090M A 1

Model
- UCS: Ester Base
- UCE: Ether Base

Tube OD
- 080: Φ8.0mm
- 100: Φ10.0mm
- 120: Φ12.0mm

Tube ID
- 050: Φ5.0mm
- 055: Φ5.5mm
- 065: Φ6.5mm
- 080: Φ8.0mm

① Standard color
- BU: Blue
- BK: Black
- GE: Orange
- CR: Clear
- WH: White
- CB: Clear Blue
- R: Red
- Y: Yellow

Material length
- 060M: 6m
- 090M: 9m
- 120M: 12m
- 150M: 15m

Coupling form
- 1: Without coupling
- 2: With female–male coupling
- 3: With male–male coupling

Coupling type
- A: one end is 30cm and the other end is 10cm
- B: Both of the tubes of the couplings are 10cm
- C: Both of the tubes of the couplings are 0cm

① Blue, black, orange and clear are standard colors. Individual orders shall be placed for other colors.

Pipe end coupling

Male quick coupling PP40Φ12×Φ8	Female quick coupling SP40Φ12×Φ8	Male quick coupling PP30Φ10×Φ6.5	Female quick coupling SP30Φ10×Φ6.5	Male quick coupling PP20Φ8×Φ5	Female quick coupling SP20Φ8×Φ5
PP40/SP40-PU tube (12×8) quick coupling use		PP30/SP30-PU tube (10×6.5)quick coupling use		PP20/SP20-PU tube (8×5)quick coupling use	

PU TUBE

Pilot no-return valve

PCV series

Symbol

Product feature

1. Can be used for safety loop of pressure holding.
2. Can make cylinder momentary stop, accurate orientation.
3. Can be used special loop.
4. Fitting joint type is used for pilot port, which saved space and improve efficiency of installation.

Inner structure

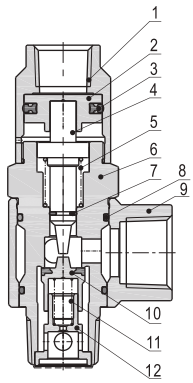

No.	Item	Material
1	Pilot body	Aluminum alloy or Brass
2	Piston	Brass
3	Gasket	NBR
4	Spool	Brass
5	Spring	SUS304
6	Body	Brass
7	Spool O-ring	NBR
8	O-ring	NBR
9	Conversion fitting	Aluminum alloy or Brass
10	Pluger	Brass+NBR
11	Spring	SUS304
12	Pedestal	Brass

Typical application

Accurate orientation

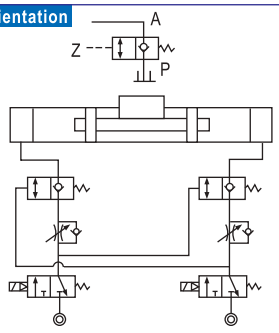

Pressure holding

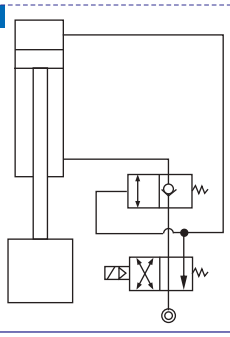

Specification

Model	PCV06	PCV08	PCV10	PCV15	PCV06F	PCV08F	PCV10F	PCV15F
Fluid	Air(to be filtered by 40 μ m filter element)							
Operating pressure range	0.1~1.0MPa							
Proof pressure	1.5MPa							
Temperature range	−20~70(℃)							
Operating frequency	60(Cycle/minute)		40(Cycle/minute)		60(Cycle/minute)		40(Cycle/minute)	
Port size ①	1/8"	1/4"	3/8"	½"	1/8"	1/4"	3/8"	½"
Pilot port size	M5X0.8	1/8"	1/4"	1/4"	Φ6	Φ6	Φ8	Φ8

① G thread are available.

Ordering code

PCV 06 □ G

Model
PCV: Pilot no-return valve

Thread type
G: G

Port size

06: 1/8"
08: 1/4"
10: 3/8"
15: 1/2"

Pilot port type

Pilot port type	Pilot port size	Inlet/outlet port size
Blank: Female thread	M5X0.8	1/8"
	1/8"	1/4"
	1/4"	3/8",1/2"
F: Fitting	Φ6	1/8",1/4"
	Φ8	3/8",1/2"

Flow chart, Relation between min. pilot pressure and operating pressure

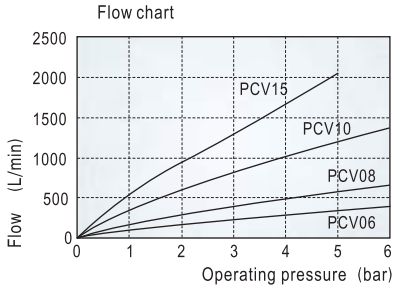

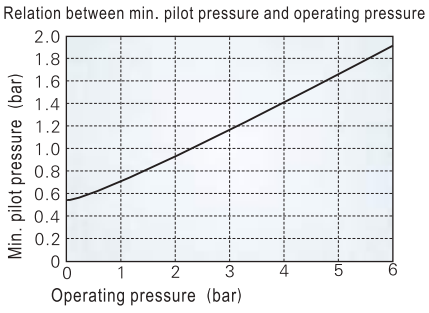

Dimensions

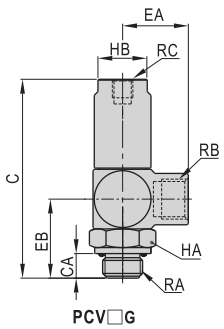

PCV□G

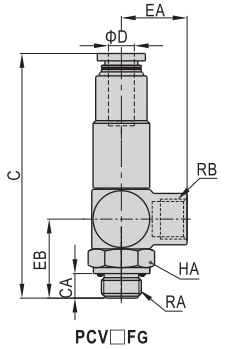

PCV□FG

Model\Item	C	CA	D	EA	EB	HA	HB	RA	RB	RC
PCV06G	48.5	5.5	-	16	19	14	12	G1/8	G1/8	M5X0.8
PCV08G	59	6.5	-	20.3	24	17	14	G1/4	G1/4	G1/8
PCV10G	74.5	7.5	-	25	30.5	22	17	G3/8	G3/8	G1/4
PCV15G	79.5	9	-	28	34.5	24	19	G1/2	G1/2	G1/4
PCV06FG	58.5	5.5	6	16	19	14	-	G1/8	G1/8	-
PCV08FG	67	6.5	6	20.3	24	17	-	G1/4	G1/4	-
PCV10FG	82	7.5	8	25	30.5	22	-	G3/8	G3/8	-
PCV15FG	87	9	8	28	34.5	24	-	G1/2	G1/2	-

Index

2		
2J	Angle seat valve	P127
2KL	Solenoid valve(2/2 way)	P118
2KS	Solenoid valve(2/2 way)	P102
2KW	Solenoid valve(2/2 way)	P110
2L	Solenoid valve(2/2 way)	P114
2P	Solenoid valve(2/2 way)	P126
2S	Solenoid valve(2/2 way)	P98
2V	Solenoid valve(2/2 way)	P124
2W	Solenoid valve(2/2 way)	P106
3		
3A	Air valve(3/2 way)	P52
3F	Foot pedal valve	P93
3FM	Foot pedal valve	P93
3L	Push–pull valve	P76
3V	Solenoid valve(3/2 way)	P22
3V1	Solenoid valve(3/2 way)	P14
3V2	Solenoid valve(3/2 way)	P16
3V2M	Solenoid valve(3/2 way)	P18
3V3	Solenoid valve(3/2 way)	P20
4		
4A	Air valve(5/2(3) way)	P55
4F	Foot pedal valve	P94
4H	Hand lever valve	P74
4HV\4HVL	Hand lever valve	P79
4L	Push–pull valve	P77
4M	Solenoid valve(5/2 way)	P36
4V	Solenoid valve(5/2(3) way)	P28
A		
ACA	Shock absorber	P404
ACE	Compact cylinder	P199
ACJ	Shock absorber	P404
ACK	Twist clamp cylinder	P341
ACQ	Ultra-Compact cylinder	P207
ADW	Dripleg drain	P155
ASC	Flow control valve	P95
C		
CM3	Control valve	P87
CS1	Sensor switch	P381
D		
DPC	Pressure switch	P160
DPS	Pressure switch	P157
DS1	Sensor switch	P381
E		
EAV	Air valve(5/2(3) way)	P65
ESV	Solenoid valve(5/2(3) way)	P40
F		
F	F knuckle	P379
G		
GA	Air distribution block	P150
GC	F.R.L combination	P134
GC□□□C	F.R.L combination(metal bowl)	P147
GF	Filter	P140
GF□□□C	Filter(metal bowl)	P147
GF\GS\GU	Pressure gauge	P156
GFC	FR.L combination	P136
GFC□□□C	FR.L combination(metal bowl)	P147
GFR	Filter & regulator	P138
GFR□□□C	Filter & regulator(metal bowl)	P147
GL	Lubricator	P144
GL□□□C	Lubricator(metal bowl)	P147
GR	Regulator	P142
GV	Soft start–up valve	P148
GZ	Safe on-off valve	P149
H		
HFC	Air gripper	P319
HFP	Air gripper	P319
HFR	Air gripper	P319
HFY	Air gripper	P319
HFZ	Air gripper	P319
HLH	Strict slide table cylinder	P259
HLQ	Strict slide table cylinder	P265
HLS	Strict slide table cylinder	P283
HRQ	Rotary table cylinder	P311
HSV	Hand lever valve	P78
I		
I	I knuckle	P377
J		
JCK	Power clamping cylinder	P349
M		
M3	Control valve	P83
M5	Control valve	P85
MD\MK	Multi-mounting cylinder	P221
MI	Stainless steel mini cylinder	P185
MPE	Thread Cylinder	P237
MPG	Plate Cylinder	P233
MU	Mini free mount cylinder	P229
N		
NRV	Non–return valve	P96
P		
PB	Stainless steel mini cylinder	P191
PCV	Pilot no-return valve	P410
Q		
QCK	Rotary clamp cylinder	P345
R		
RMS	Rodless magnetic cylinder	P301
RMT	Rodless magnetic cylinder(With guide)	P305
S		
S3	Control valve	P81
SDR	Regulator	P153
SE	Standard cylinder	P165
SGC	Standard cylinder	P179
SI	Standard cylinder	P171
SR	Regulator	P152
STW	Slide table cylinder	P251
T		
TCL\TCM	Tri-rod cylinder	P245
TR	Twin rod cylinder	P241
TW	Stopper cylinder	P367
U		
U	U knuckle	P379
UCS\UCE	Polyurethane tubing	P408
US\UE	Polyurethane tubing	P408
Y		
Y	Y knuckle	P377
Z		
ZM3	Control valve	P91

Europe Branch Office

Name：ATC (Italia) S.R.L.
Add：Via Manzoni 20, 20020 Magnago (MI), Italy
Tel：+39–0331–307204
Fax：+39–0331–307208
Zip code：20020

Headquarter, Sales Companies and Production Bases

Name：AirTAC International Group Taiwan Branch (CayMan)
Office：4F., No.129, Sec.3, Minsheng E. Rd., Songshan Dist.,
Taipei City 10596, Taiwan (R.O.C.)
Tel：+886-2-2719-7538
Fax：+886-2-2719-7539
Zip code：10596
Factory：No.28, Kanxi Rd., Xinshi Dist., Tainan City 74148, Taiwan (R.O.C.)
Tel：+886–6–5896–889
Fax：+886–6–5898–589
Zip code：74148

Name：AirTAC Industrial Co., Ltd.
Add：No. 23, Ziyou St., Tucheng District, New Taipei City, Taiwan(R.O.C.)
Tel：+886–2–2269–7766
Fax：+886–2–2269–0077
Zip code：236

Name：Ningbo AirTAC Automatic Industrial Co., Ltd.
Add：No.88, Siming E. Rd., High Tech Area of Fenghua City, Zhejiang, China
Tel：+86–574–8895–0001
Fax：+86–574–8895–0066
Zip code：315500

Name：Guangdong AirTAC Automatic Industrial Co., Ltd.
Add：No. 7, Kaixuan Rd., Songxia Industrial Park, Shishan Town,
Nanhai District, Foshan, Guangdong, China
Tel：+86–757–8521–7188
Fax：+86–757–8521–7841
Zip code：528234

Name：AIRTAC INTERNATIONAL(SINGAPORE) PTE LTD
Add：12 GUI DRIVE, SINGAPORE 629463
Tel：+65–6933–7676
Fax：+65–6863–9030
Zip code：629463

Name：AIRTAC INDUSTRIAL(M) SDN BHD
Selangor (KL)：No. 25, Jalan Gitar 33/3, Perindustrian Elite,
Seksyen 33 Shah Alam, 40460 Selangor
Tel：+60–11–1630–2853
Johor (JB)：No 33, Jalan Molek 1/5A, Taman Molek, 81100 Johor Bahru,
Johor, Malaysia
Tel：+60–7–3587–969
Fax：+60–7–3587–971
Zip code：81100

Name：AirTAC Industrial Co.,Ltd.
Add：11/12 M00 9, Bangchalong, Bangplee, Samutprakarn, Thailand.
Tel：+66–2–0233–515
Fax：+66–2-0233-518
Zip code：10540

Name：Airtac Co., Ltd.
Add：3-6-3, Kusune, Higashiosaka-shi, Osaka, Japan
Tel：+81-6-4307-6039
Fax：+81-6-4307-6038
Zip code：577-0006